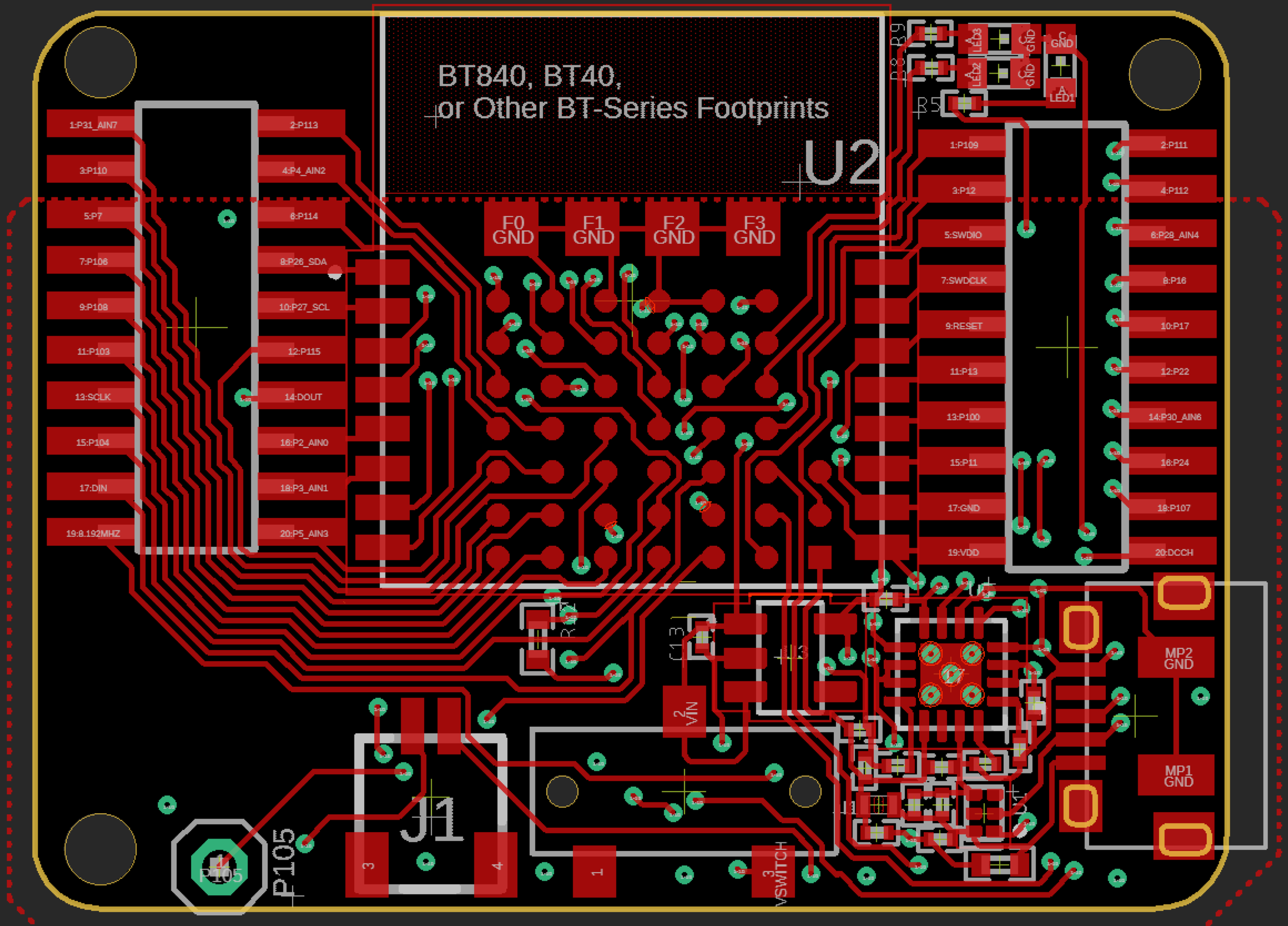
BT840, BT40,
or Other BT-Series Footprints
U2
1:P31_AIN7
2:P113
3:P110
4:P4_AIN2
5:P7
6:P114
7:P106
8:P26_SDA
9:P108
10:P27_SCL
11:P103
12:P115
13:SCLK
14:DOUT
15:P104
16:P2_AIN0
17:DIN
18:P3_AIN1
19:8.192MHZ
20:P5_AIN3
F0 GND
F1 GND
F2 GND
F3 GND
1:P109
2:P111
3:P12
4:P112
5:SWDIO
6:P28_AIN4
7:SWDCLK
8:P16
9:RESET
10:P17
11:P13
12:P22
13:P100
14:P30_AIN6
15:P11
16:P24
17:GND
18:P107
19:VDD
20:DCCH
MP2 GND
MP1 GND
J1
P105
VIN
VSWITCH

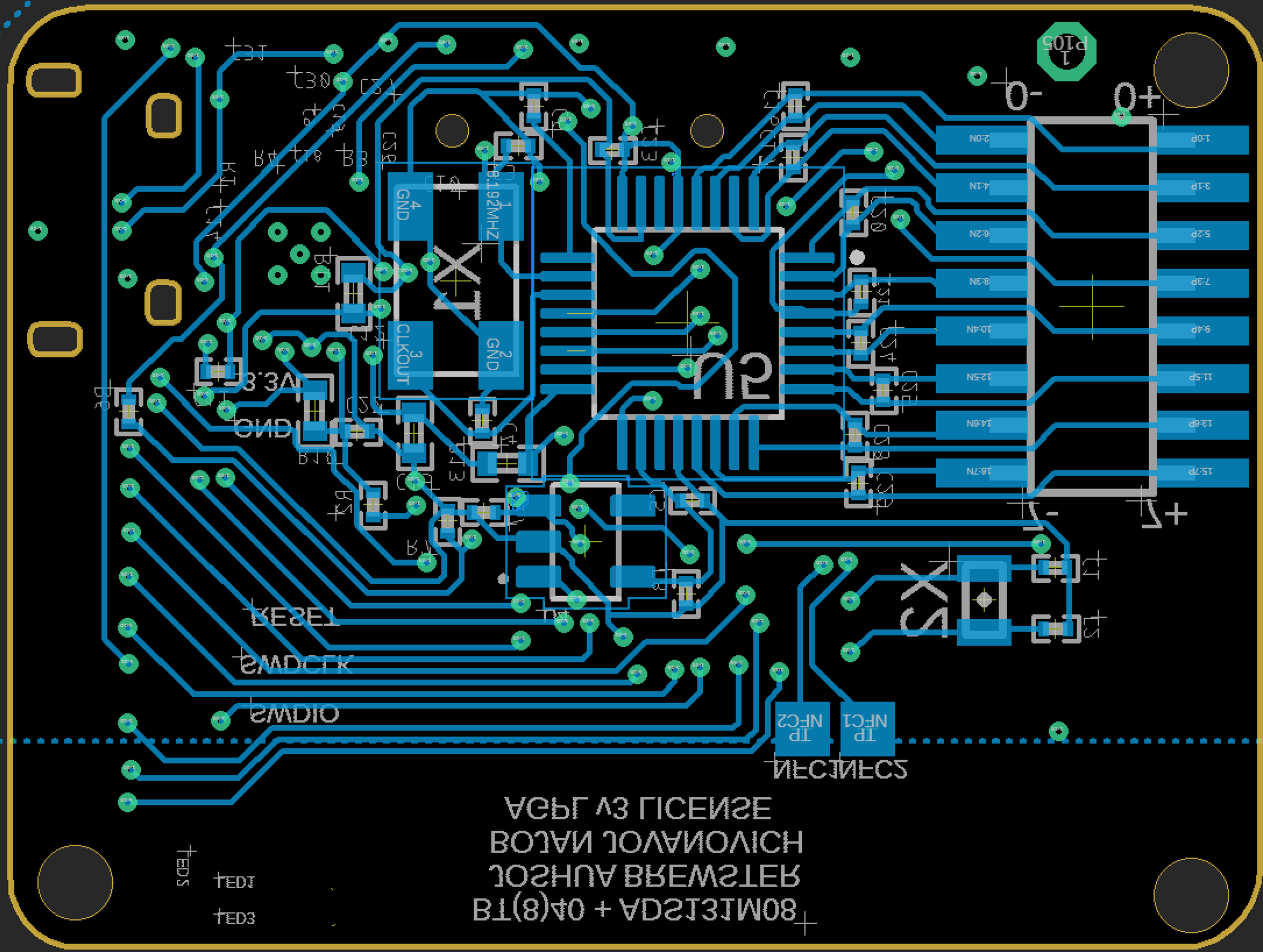
P105
1
-
+
1.0P
2.0N
3.1P
4.1N
5.2P
6.2N
7.3P
8.3N
9.4P
10.4N
11.5P
12.5N
13.6P
14.6N
15.7P
16.7N
GND
8.192MHZ
CLKOUT
GND
XTAL
RESET
SWDCLK
SWDIO
TDI
TDO
NFC1
NFC2
TP
TP
ACAR v3 LICENSE
BOJAN JOVANOVICH
JOSHUA BREWSTER
BT(8)40 + ADS131M08

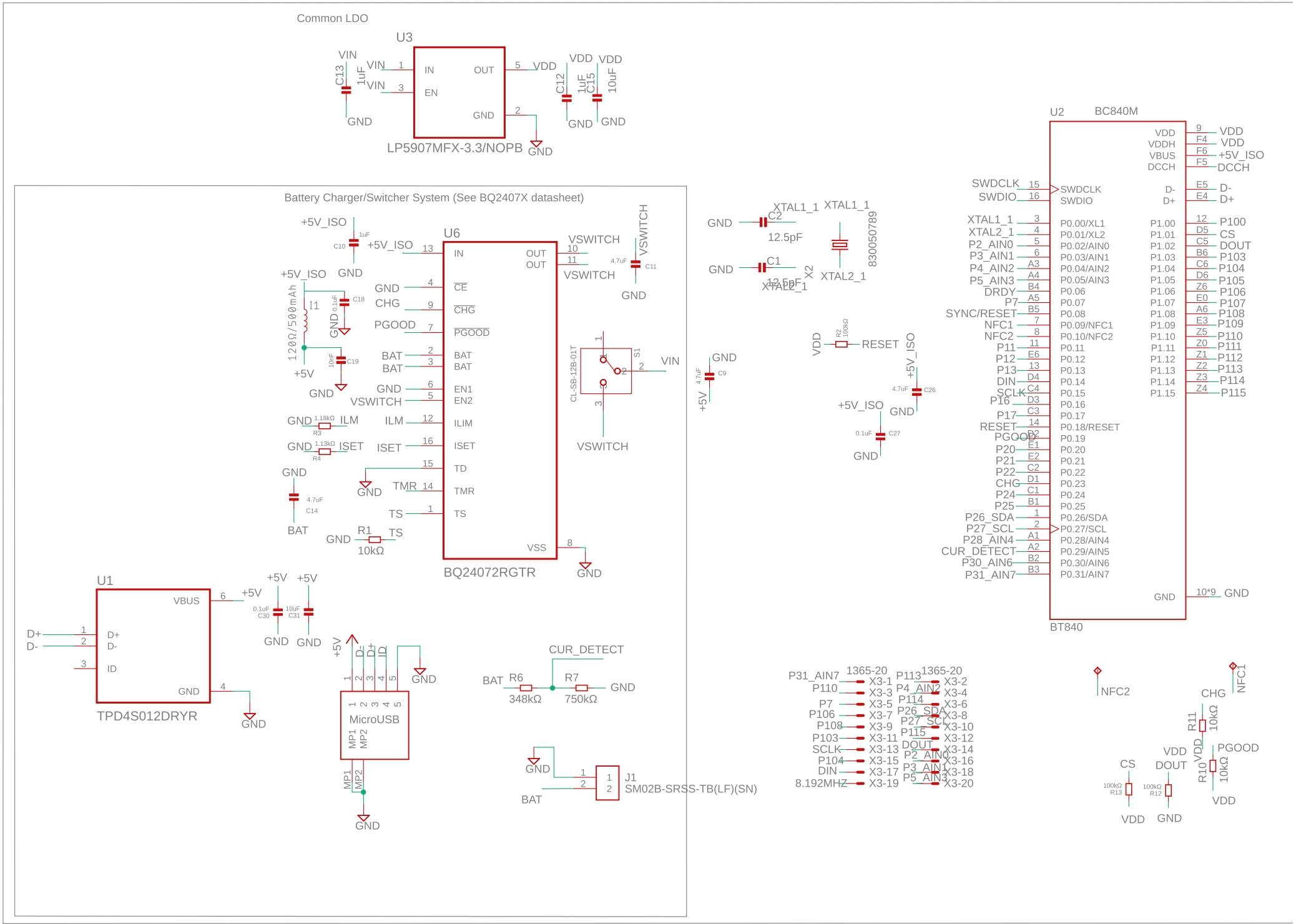
Common LDO
U3
LP5907MFX-3.3/NOPB
Battery Charger/Switcher System (See BQ2407X datasheet)
U6
BQ24072RGTR
U1
TPD4S012DRYR
MicroUSB
J1
SM02B-SRSS-TB(LF)(SN)
U2
BC840M
BT840
XTAL1_1
XTAL2_1
830050789
CL-SB-12B-01T
8.192MHZ
1365-20

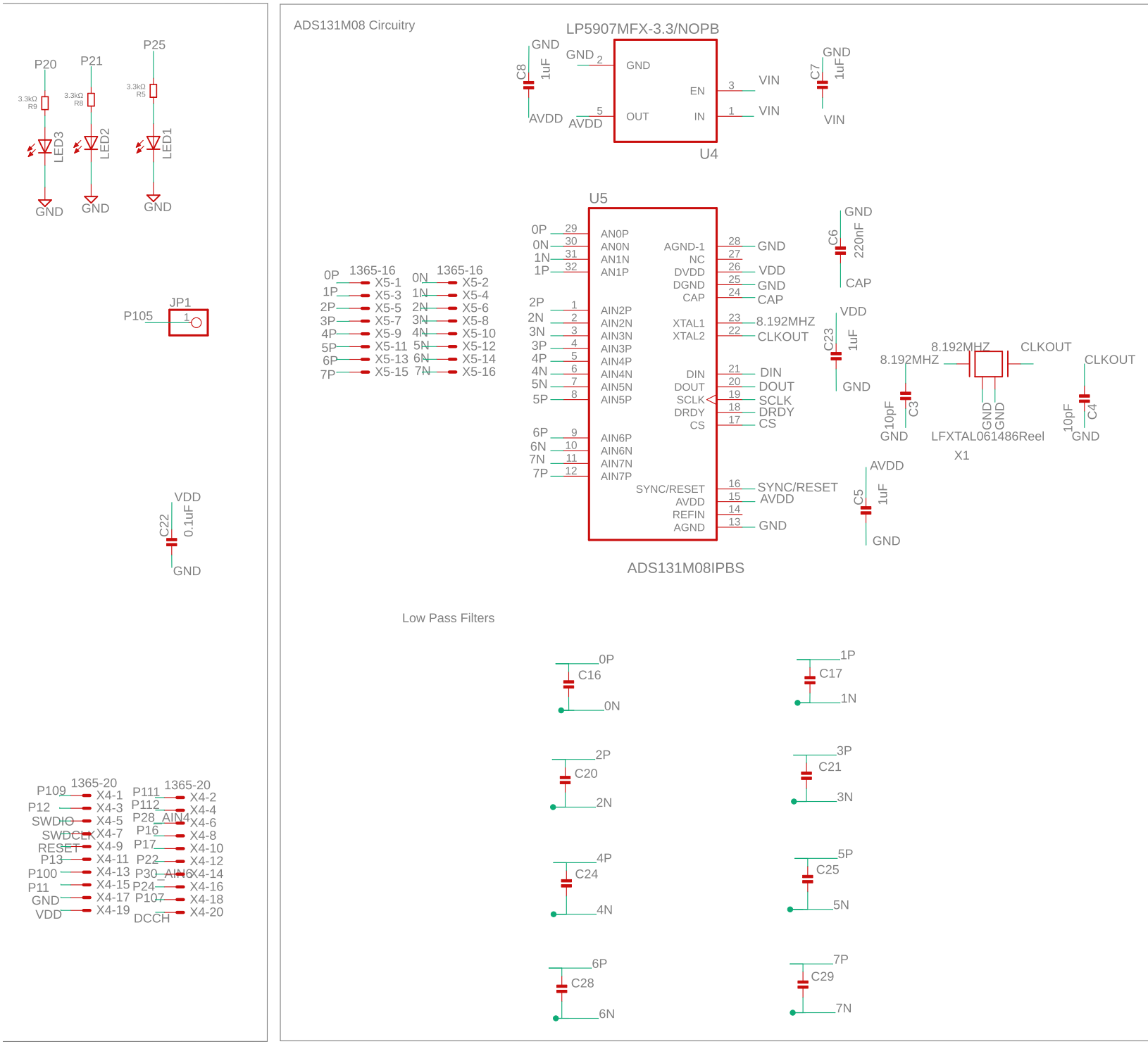
ADS131M08 Circuitry
LP5907MFX-3.3/NOPB
U4
U5
ADS131M08IPBS
1365-16
1365-20
JP1
P105
P20
P21
P25
LED1
LED2
LED3
3.3kΩ R9
3.3kΩ R8
3.3kΩ R5
C8 1uF
C7 1uF
C6 220nF
C23 1uF
C5 1uF
C22 0.1uF
C3 10pF
C4 10pF
8.192MHZ
CLKOUT
LFXTAL061486Reel
X1
VIN
VDD
AVDD
GND
CAP
Low Pass Filters
C16
C17
C20
C21
C24
C25
C28
C29