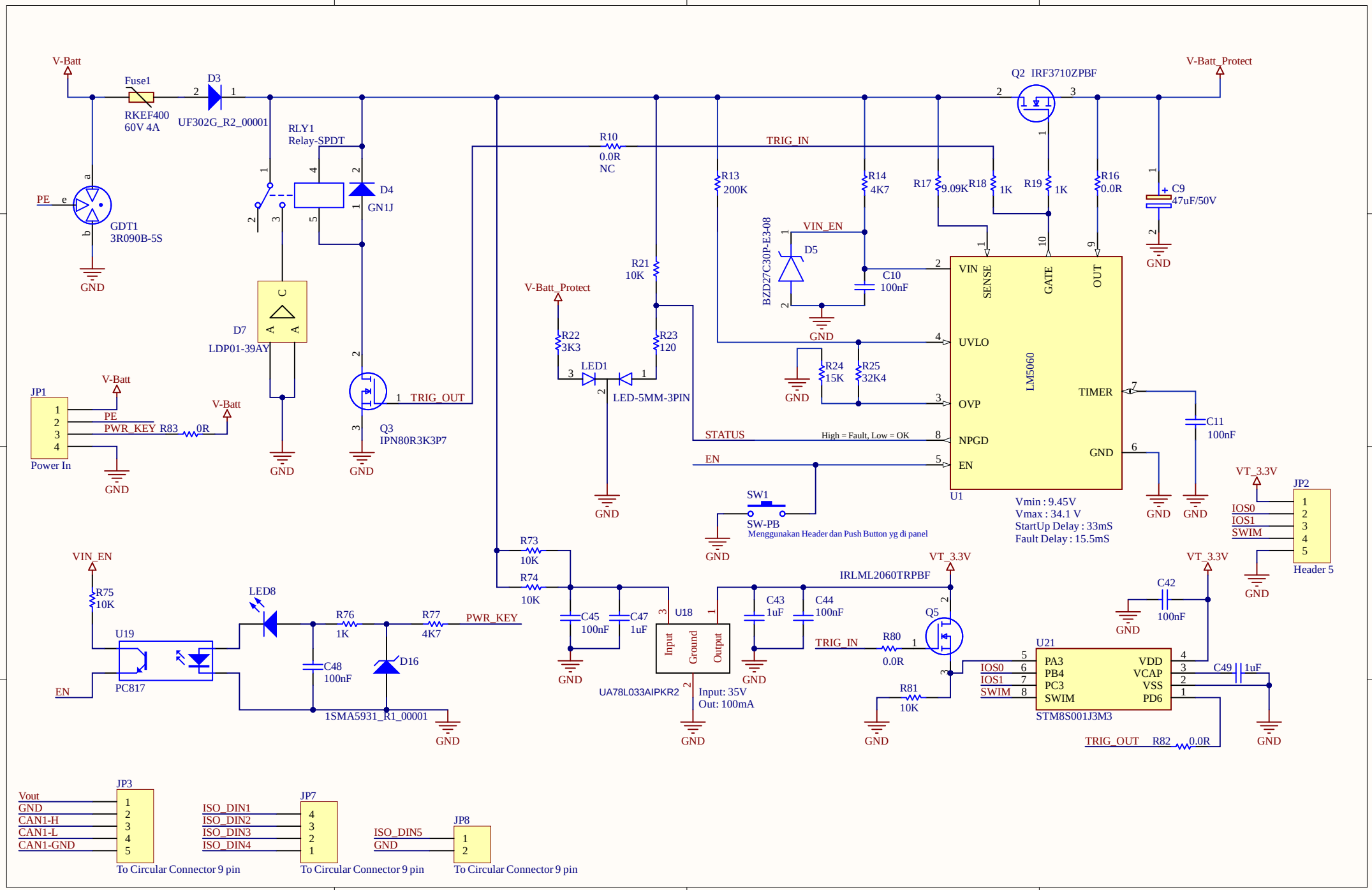
V-Batt
Fuse1
RKEF400
60V 4A
D3
UF302G_R2_00001
RLY1
Relay-SPDT
D4
GN1J
PE
GDT1
3R090B-5S
GND
D7
LDP01-39AY
Q3
IPN80R3K3P7
TRIG_OUT
JP1
Power In
PE
PWR_KEY
R83
0R
R10
0.0R
NC
TRIG_IN
R13
200K
R14
4K7
R17
9.09K
R18
1K
R19
1K
R16
0.0R
C9
47uF/50V
Q2 IRF3710ZPBF
V-Batt_Protect
VIN_EN
D5
BZD27C30P-E3-08
C10
100nF
R21
10K
R22
3K3
R23
120
LED1
LED-5MM-3PIN
R24
15K
R25
32K4
VIN
SENSE
GATE
OUT
UVLO
OVP
NPGD
EN
TIMER
LM5060
U1
STATUS
High = Fault, Low = OK
C11
100nF
Vmin : 9.45V
Vmax : 34.1 V
StartUp Delay : 33mS
Fault Delay : 15.5mS
SW1
SW-PB
Menggunakan Header dan Push Button yg di panel
VT_3.3V
JP2
IOS0
IOS1
SWIM
Header 5
R73
10K
R74
10K
C45
100nF
C47
1uF
U18
Input
Ground
Output
UA78L033AIPKR2
Input: 35V
Out: 100mA
C43
1uF
C44
100nF
IRLML2060TRPBF
Q5
R80
0.0R
R81
10K
C42
100nF
U21
PA3
PB4
PC3
SWIM
VDD
VCAP
VSS
PD6
STM8S001J3M3
C49
1uF
TRIG_OUT
R82
0.0R
VIN_EN
R75
10K
U19
PC817
EN
LED8
R76
1K
R77
4K7
PWR_KEY
C48
100nF
D16
1SMA5931_R1_00001
JP3
Vout
GND
CAN1-H
CAN1-L
CAN1-GND
To Circular Connector 9 pin
JP7
ISO_DIN1
ISO_DIN2
ISO_DIN3
ISO_DIN4
To Circular Connector 9 pin
JP8
ISO_DIN5
GND
To Circular Connector 9 pin

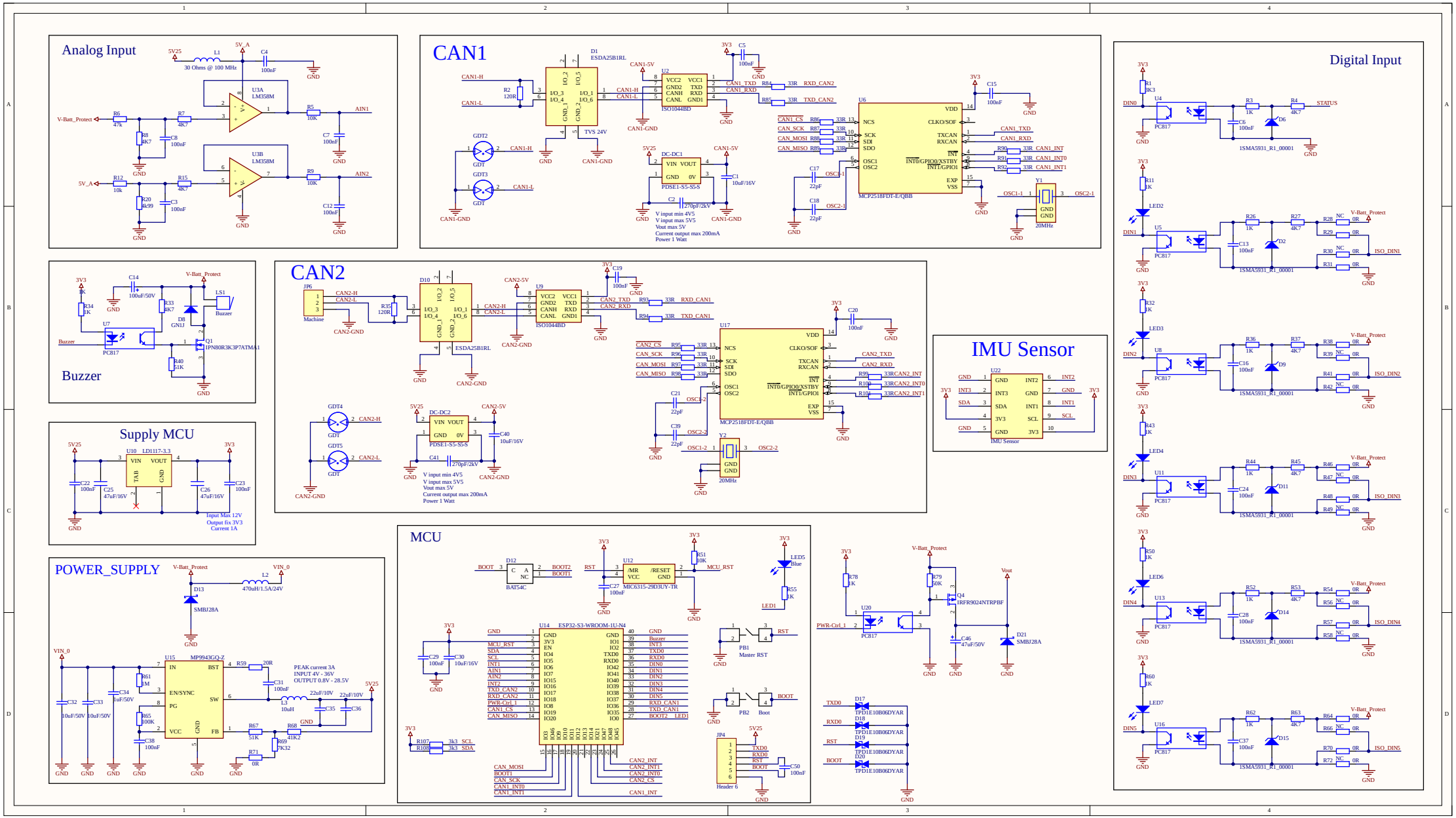
Analog Input
CAN1
Digital Input
Buzzer
CAN2
IMU Sensor
Supply MCU
MCU
POWER_SUPPLY

Relay 24V
Transient Layout
Timer
Fuse1
Input
VIN
PE
PWRKEY
GND
Reset Transient
Green
LED8
GND
MTMS
SO1
SO1
EXE_LV
U1 STM32
CAN1
Vout
GND
CANH
CANL
GND
CAN
CAN2
CANH
CANL
GND
CAN
Digital Input
DIN5
DIN4
DIN3
DIN2
DIN1
RST
GND
Boot
RST
RXD
TXD
5V2S
Boot
VIN
Signal
BUZZER
toho
IOconnector V2.3
28/11/24

Relay 24V
Transient Layout
Timer
Input
Reset Transient
Green
GND
MIMS
ISO1
ISO0
3V3_TV
VIN
PE
PWRKEY
GND
Vout
GND
CANH
CANL
GND
CAN
CAN 1
CAN 2
RST
GND
Boot
RST
RXD
TXD
5V2S
Boot
Digital Input
DIN5
DIN4
DIN3
DIN2
DIN1
GND
VIN
Signal
BUZZER

toho
IOController V2.3
28/11/24
Input
VIN
PE
PWRKEY
GND
Relay 24V
Transient Layout
Timer
Reset Transient
Green
Signal
BUZZER
Boot
RST
GND
Boot
RST
RXD
TXD
5V2S
VIN
Digital Input
DIN1
DIN2
DIN3
DIN4
DIN5
GND
CAN1
CAN2
CAN3
CAN4
CAN5
GND
CAN1
CAN2
GND
Vout
GND
CAN1
CAN2
GND
CAN1
CAN2
GND
CAN1
CAN2
GND
CAN1
CAN2
GND
3V3_LM
MISO
MOSI
MIMS
GND
IMU Sensor

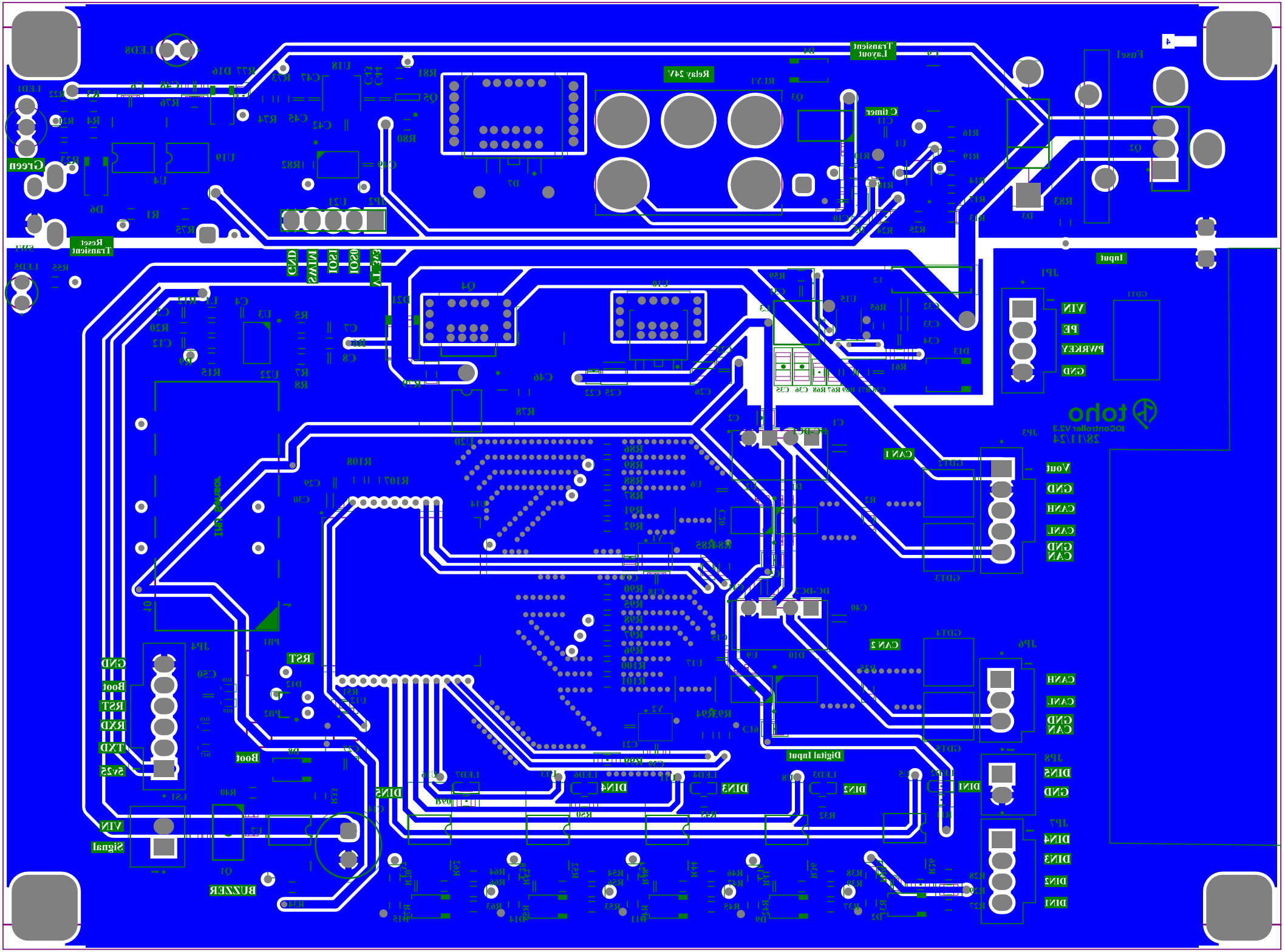
Transient Layout
Relay 24V
Timer
Fuse1
Green
Reset Transient
GND
MISO
MOSI
SCK_3V3
Input
VIN
PE
PWRKEY
GND
toho
BOSmaster V2.3
28/11/24
CAN 1
Vout
GND
CANH
CANL
GND
CAN
CAN 2
CANH
CANL
GND
CAN
Digital Input
DIN5
GND
DIN4
DIN3
DIN2
DIN1
RST
GND
Boot
RST
RXD
TXD
5V2
Boot
DIN5
DIN4
DIN3
DIN2
DIN1
VIN
Signal
BUZZER

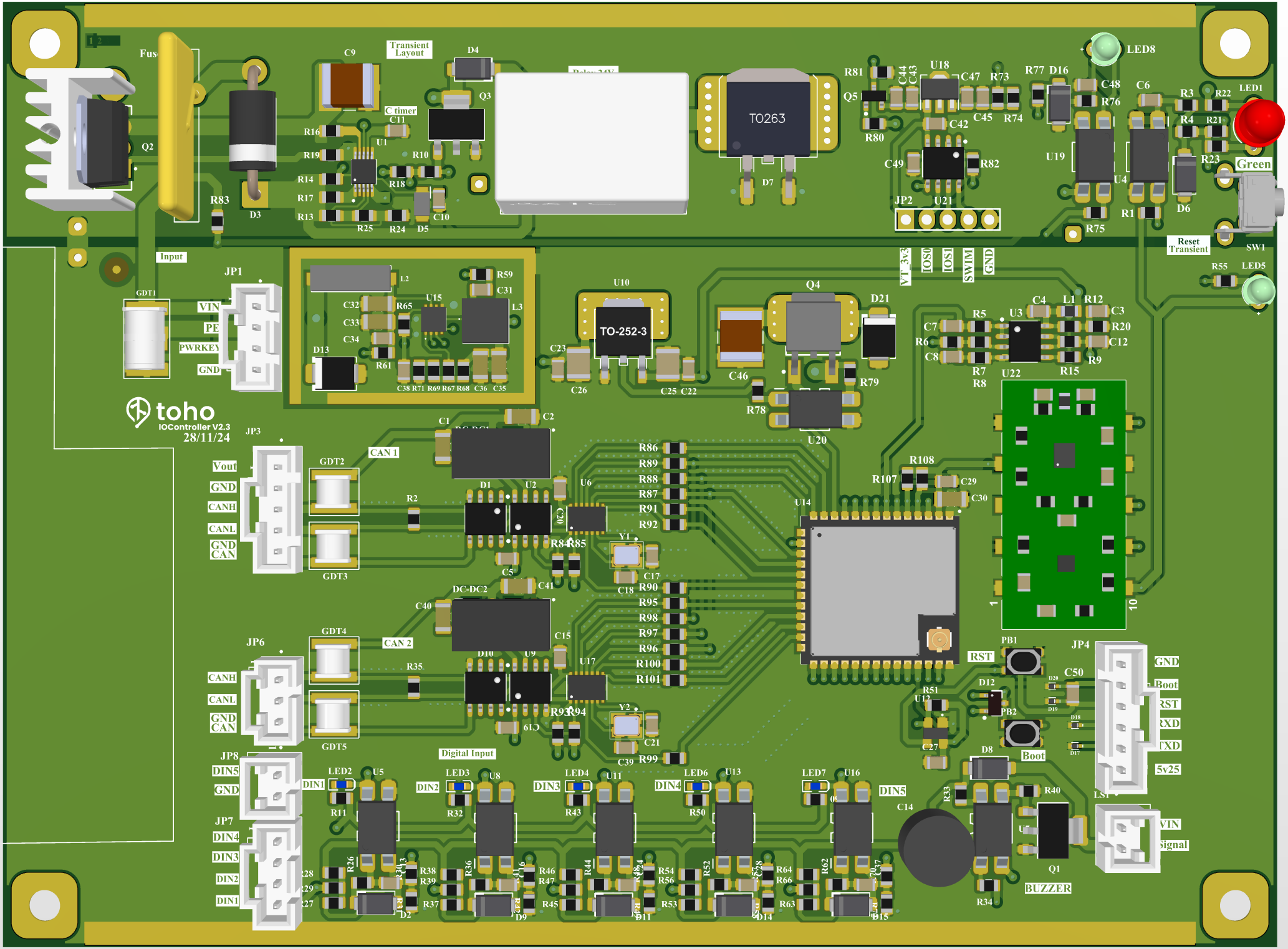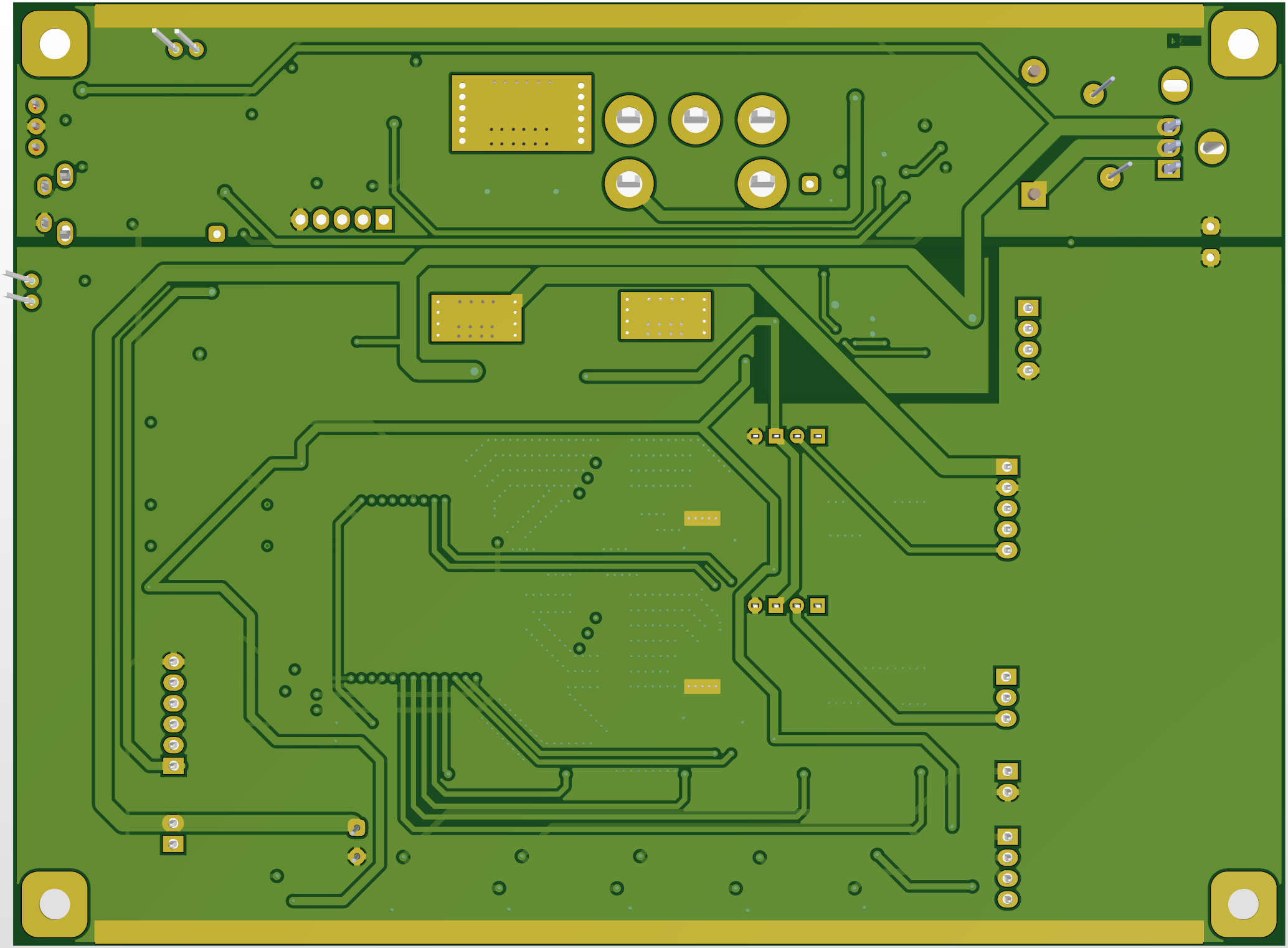
Fus
Transient Layout
C timer
Relay 24V
TO263
LED8
LED1
Green
Reset Transient
SW1
LED5
Input
JP1
VIN
PE
PWRKEY
GND
GDT1
toho
IOController V2.3
28/11/24
TO-252-3
VT_3V3
IOSI
IOSI
SWIM
GND
JP3
Vout
GND
CANH
CANL
GND CAN
GDT2
GDT3
CAN 1
DC-DC2
JP6
CANH
CANL
GND CAN
GDT4
GDT5
CAN 2
JP8
DIN5
GND
JP7
DIN4
DIN3
DIN2
DIN1
Digital Input
RST
Boot
JP4
GND
Boot
RST
RXD
TXD
5v25
VIN
Signal
BUZZER