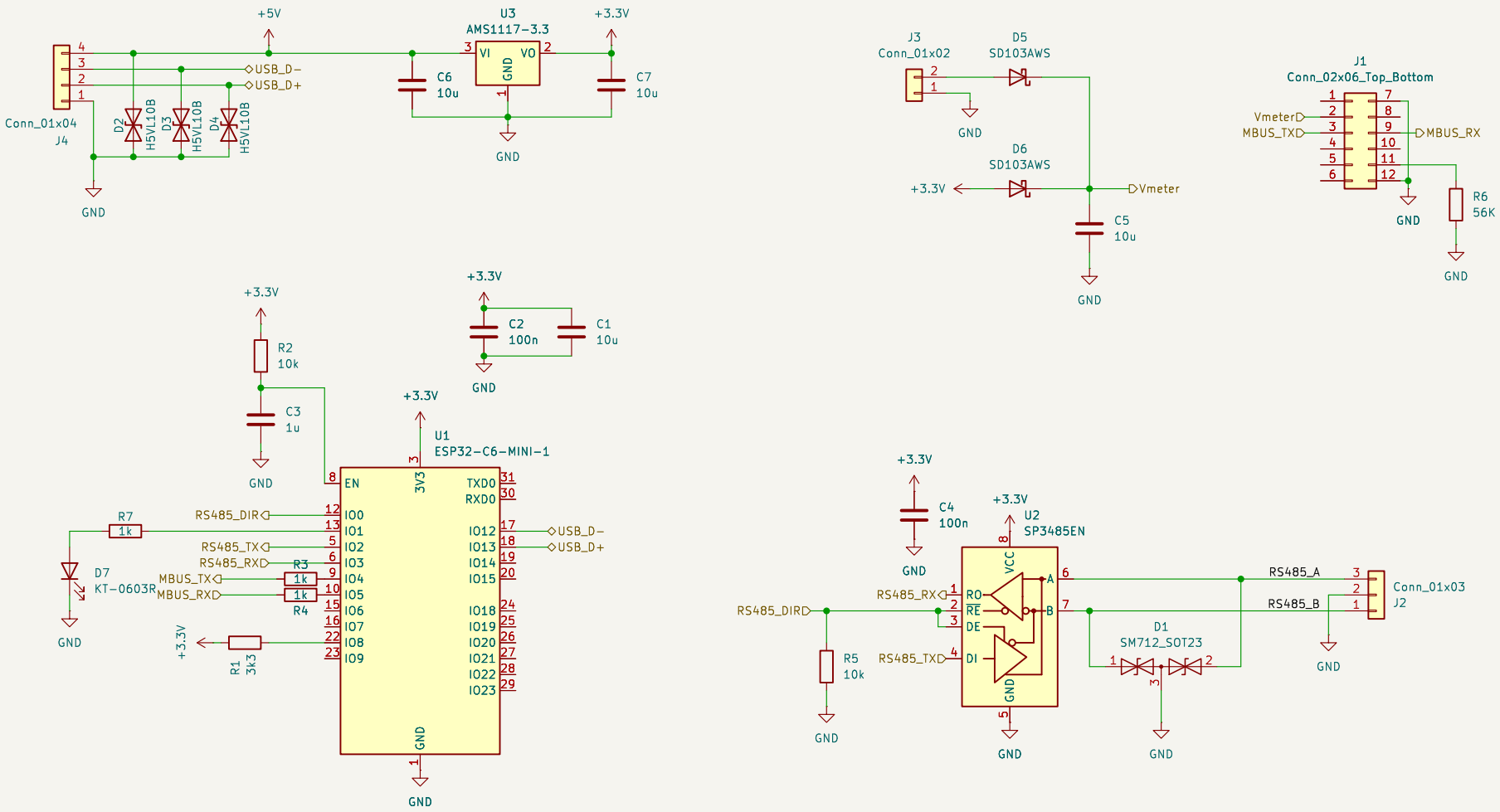

Sheet: /
File: SensoStar.kicad_sch

Title: SensoStar-ESP - v2

Size: A4	Date: 2025-10-05	Rev:
KiCad E.D.A. 9.0.5		Id: 1/1