KONICA MINOLTA

Giving Shape to Ideas

BRIDGE TO YOUR SUCESSS WITH RICH IN COLOUR AND HIGH IN PRODUCTIVITY

RETHINK VERSATILITY

AccurioPress
C4080

HAVE IT ALL WITH ONE PRESS.

RETHINK THE FUTURE OF DIGITAL PRINT

Imagine having just a single press that is good for everything: 2-sided banner printing, professional inline finishing, highest productivity, real-time automated quality adjustments, excellent print quality, and so much more. That's the AccurioPress C4080 series from Konica Minolta for you: our agile production colour press with features that enable you to expand your business into new markets and develop new revenue streams.

EXCEPTIONAL QUALITY, EVERY PRINT

Exclusive Intelligent Quality Optimizer 1Q-501 leverages Konica Minolta's long history of brilliant imaging technology, allowing you to wow your customers with stunning consistent colour prints time and time again.

A SINGLE ENGINE DOES IT ALL

The AccurioPress C4080 series is a fully configured press to expand your business as you wish. You can print flat shoets, duplex long sheets of up to 34”, or directly finish prints inline with our extensive choice of finishing options to meet your charita' every need in one integrated production process.

GROW YOUR BUSINESS

The AccurioPress C4080 series expands your business with new capabilities. Our system offers the biggest media variety in the market, from thin to thick paper, embossed paper, envelopes, and much more. All supported by our new optional media sensor to guarantee worry-free operation.

BOOST EFFICIENCY

Operators of any AccurioPress system can count on simple setup, an ultra-reliable paper path, exceptional productivity, and outstanding automated image stability. Our R&D Team has given highest priority to fulfilling today's high demands in the printing industry. What's more, the AccurioPress system seamlessly integrates into various software applications from our portfolio that will make your business more economic.

10 GOOD REASONS
FOR ACCURIOPRESS C4080

HIGH OUTPUT 1

A4: 81 PPM CLR
A3: 45 PPM CLR

SIMPLY EFFICIENT 2

With Intelligent Media Sensor, Intelligent QualityOptimizer and many unique Inline finishing options.

ENHANCE YOUR RANGE OF PRINT OFFERINGS 3

Fulfil today's demands for versatile and creative print products like Envelope, 4up Brochure.

PERFECT IMAGE QUALITY 4

With Konica Minolta's very own Imaging Technology and Toner development.

OUTSTANDING PAPER COMPATIBILITY 5

Use medla up to 360 gsm for excellent versatility with class leading banner and envelope printing capabilities.

SEAMLESS INTEGRATION 6

Access to Konica Minolta's application portfolio.

EASY OF USE 7

Precise colour matching minimizes training even for unskilled operators.

SHORT TURNAROUNDS 8

With automated quality control and inspection on the fly.

BENEFIT FROM GREAT BUILT-IN TECHNOLOGIES 9

Like our latest innovations in screening and registration from A5 to 13x51 inches applications, Tag printing capable.

VERSATILITE CONFIGURATIONS 10

Choose from over 200 possibilities to configure your perfect press.

YOUR ADVANTAGES WITH THE AccurioPress C4080

RETHINK PRODUCTION PRINTING

READY-MADE PRINT PRODUCTS

- 50-sheet booklet making with front trimming and optional creasing, slitting and spine corner forming
- Perfect binding for books of up to 30 mm
- Automated inline business card and postcard cutting
- Full bleed banners, A3 and A4 posters

DURABLE PERFORMANCE

AccurioPress C4080

- Up to 81 A4 colour pages per minute
- Up to 45 A3 colour pages per minute

HIGHEST RELIABILITY

- Long-life platform, long-lasting parts and consumables
- Accurate front to back registration
- Fusing-rolling mechanism

HIGH-END PRINT CONTROL

- Flexible choice of controller technology: EFI® or proprietary Konica Minolta controller
- Integration into hybrid workflows

EASE OF USE

- Automated real-time engine calibration
- Simple paper catalogue settings
- Open API/IWS support

SOPHISTICATED MEDIA HANDLING

- Air suction or air-assisted paper feeding technology
- Up to 11 paper trays
- Long sheet printing of up to 1300mm (simplex), 864mm (duplex)

COMPREHENSIVE MEDIA PROCESSING

- Up to 360gsm paper weight in simplex and duplex
- Envelope print function as standard
- Optional media sensor estimates paper weight and type

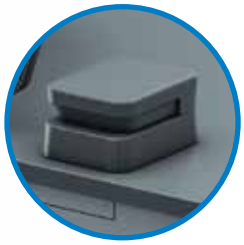

SIMPLY EFFICIENT

- Automated engine linearisation
- Automated duplex registration
- Automated profiling
- Real-time adjustments
- Purge function

PERFECT IMAGE QUALITY

- S.E.A.D. V technology and 3,600 x 2,400 dpi x 8 bit resolution
- Simitri HDe toner technology
- Image density control technology

FINISHING & FUNCTIONS

	2/4 hole Punching	Two-point stapling	Corner stapling	Stacking	Booklet	Three-fold	Post Insertion
Open stacker **OT-512**				✓			
Staple finisher **FS-532m**	○	✓	✓	✓	○	○	○
Folding and punching unit **FD-503**	✓					✓	✓

✓ standard ○ optional

NEW TRIMMING UNIT - TU-510

Trimmer unit TU-510, which can trim in all four directions, is now available.
The main functions are as follows:

- Four-side trimming
- Business card/card size cutting
- Creasing
- SRA3 paper to 2 A4 papers

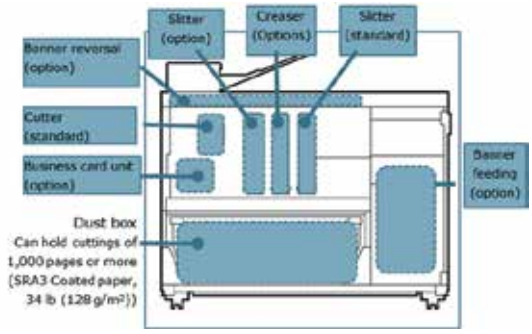

PERFECT BINDING UNIT PB-503

- Hot melt glue binding system
- Books from A5 up to A4+ (307 x 221 mm)
- Books from 10 sheets up to 30 mm spine width
- Simplex and duplex printing of covers and its spine

STAPLE FINISHER FS-532M

Major functions of FS-532m
(includes functions with sub-options)

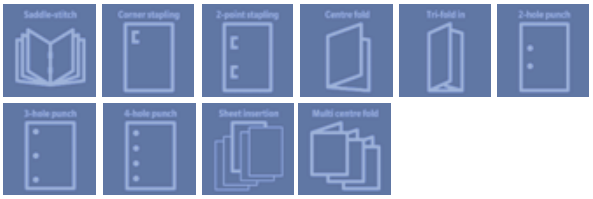

*A4 paper, with SD-510 and MK-761 uninstalled

Controller

Konica Minolta Embedded Controller IC-609)
Expansion HDD UK-112
APPE kit UK-220
VDP kit UK-222*
Local connection kit EK-612
Fiery Controller (Server type) IC-317
Fiery Controller (Embedded type) IC-419
Video interface kit VI-515

Options for printer body

Original cover OC-511
Working table WT-511
Pat-light MK-744C
IC card authentication AU-201S
Dehumidifier heater for printer tray HT-511
Fusing unit for envelope printing EF-107

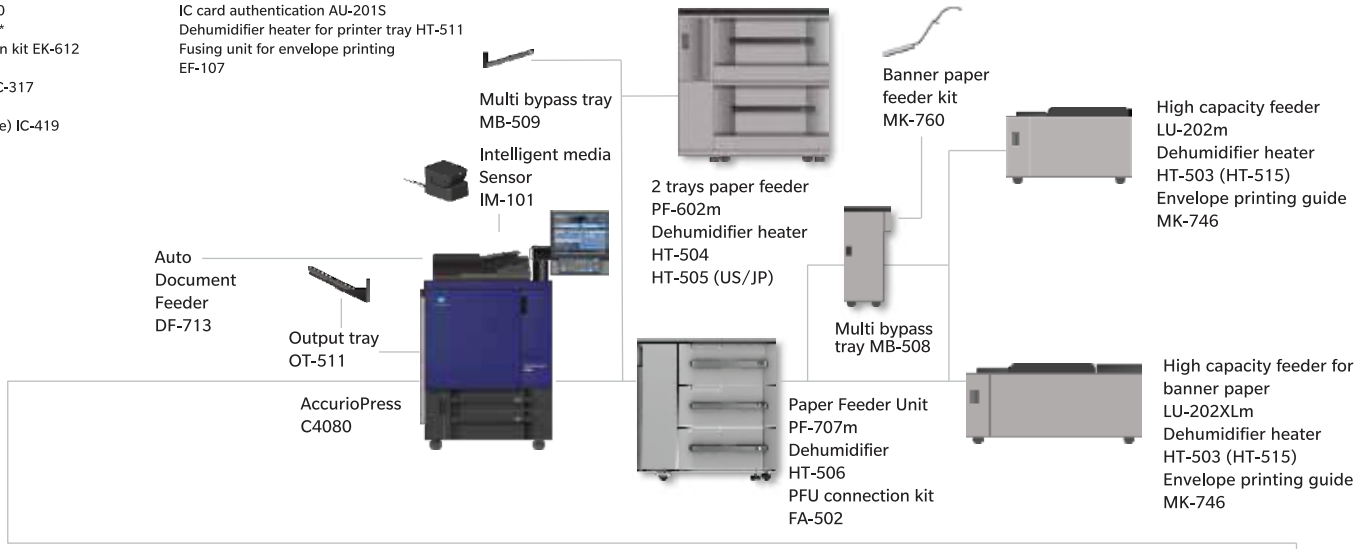

Auto inspection options

Processing unit UK-301
Video interface VI-515

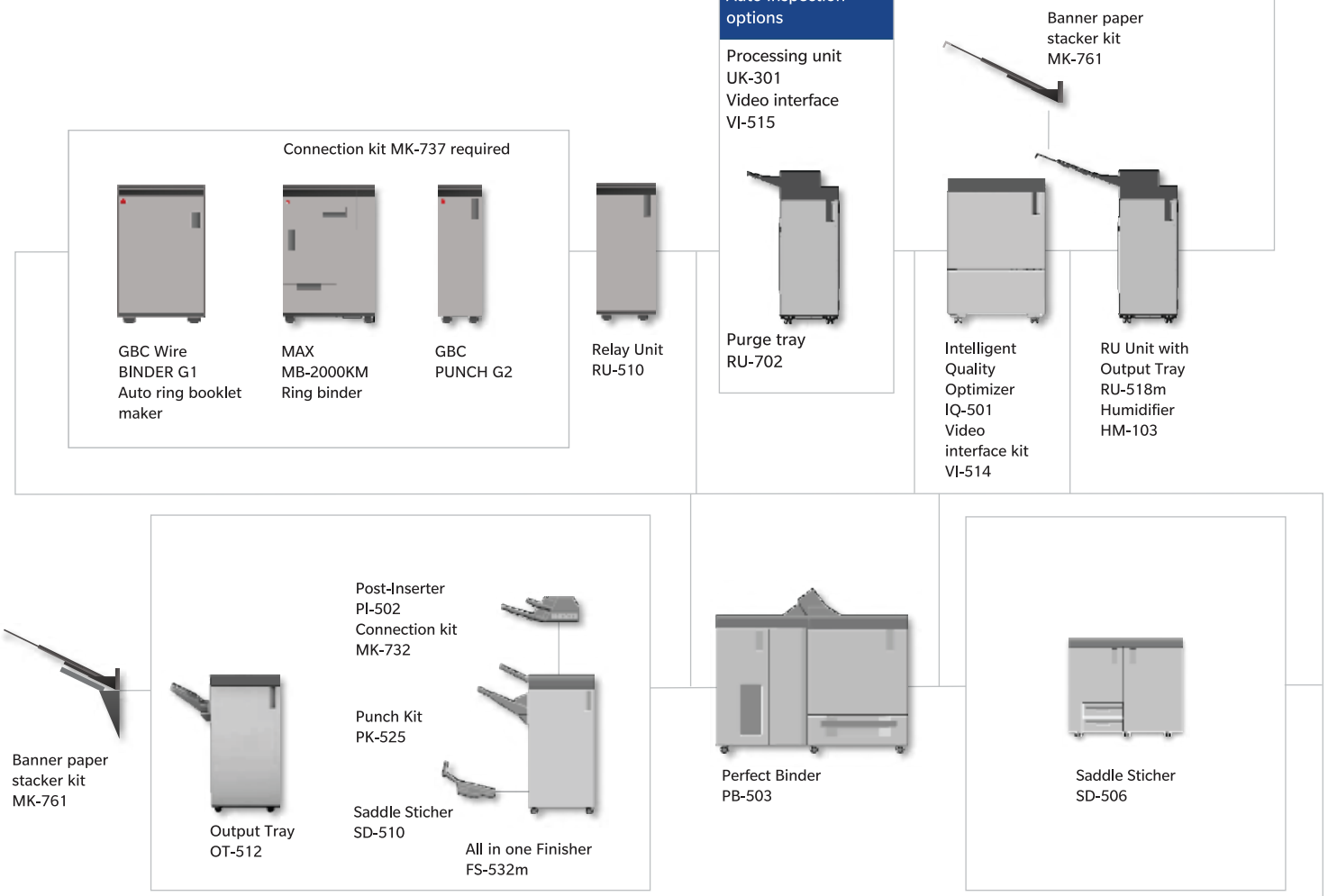

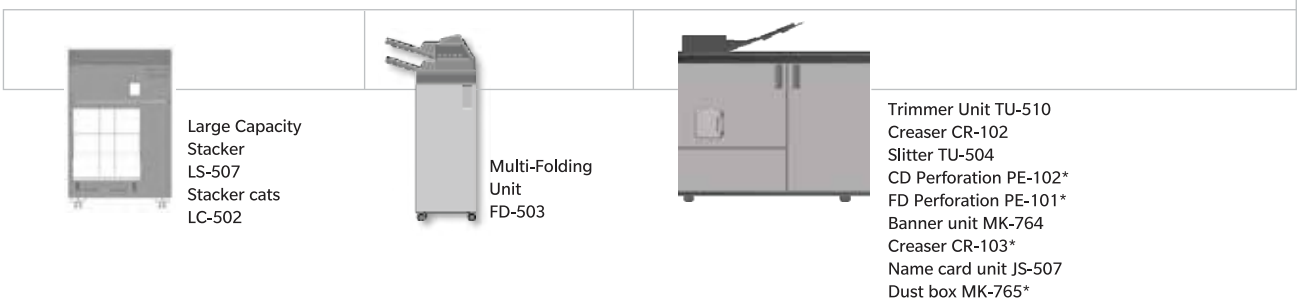

TECHNICAL SPECIFICATIONS
RETHINK PRODUCTION PRINTING

		AccurioPress C4080
Type		Console
Color availability		color
Paper weight		62 – 360 g/m2
Paper sizes		330.2 x 487.7 mm 330.2 x 864 mm (max.duplex) 330.2 x 1300 mm (max. simplex)
Paper input		Max.: 15,390 sheets
Scanning resolution		600 dpi x 600 dpi
Writing resolution		Equivalent to 3600 dpi x 2400 dpi
Copy Speed	A4	-Simplex: 81 ppm
	A3	-Simplex: 45 ppm
	217-360 g/m2	51 A4/28 A3
Gradation		256
Standard Paper Tray Capacity		1500 sheets A4 80 g/m2
Magnification		25 – 400%, in 0.1% steps
Memory size		24GB (main body:8GB+ IC 609:16GB)
Warm-up Time		390 seconds or less
First Copy/Printing Time (Color/Monochrome)		6.1 seconds or less/ 4.0 seconds or less
Scan speed (A4)		Single-sided 140 opm*3 Duplex 280 opm*1
Envelope Printing		Standard
Controller CPU-IC 609		Intel Core i5-6500 3.2GHz*1
Compatible Controllers		IC-609 (KM), IC-317 (EFI), IC-419 (EFI)
Main Unit Size (WxDxH mm) (Recommended) configuration		84.65 x 35.55 x 58.19 inches (2,150 x 903 x 1478 mm) (main unit + DF-713 + LU-202m + FS-532+IC)
Duty Cycle		8,64,000*2
Average Monthly Print Volume (optimum volume)		54K -150K
Unit weight		328 kg

For Plastic Waste Management Details

For Battery Waste Management Details

KONICA MINOLTA IMAGE CONTROLLER IC-609

Architecture	Internal
OS	Linux
CPU	Intel Core i5 6500
Clock speed	3.2 GHz
RAM std	16 GB
HDD	1 TB x 2
Page-description language	PostScript3 (PS PS3020); PDF Ver1.7; TIFF Ver6 compatible; PPML Ver2.2; Optional APPE Ver4.6; PDF/VT ver2
Applicable OS	Windows 8.1/10; Windows Server 2012/R2/2016/2019; Mac OS X 10.11–15

FIERY IMAGE CONTROLLER IC-419

Architecture	Internal
OS	Linux
CPU	Intel Pentium G4400
Clock speed	3.3 GHz
RAM std	8 GB
HDD	500 GB
Page-description language	PostScript3 (CPSI 3020); PDF Ver1.7; APPE Ver5; PCL (5, 6) emulation
Applicable OS	Windows 8.1/10; Windows Server 2012/R2/2016/2019; Mac OS X 10.11–15

FIERY IMAGE CONTROLLER IC-317

Architecture	External
OS	Windows 10
CPU	Intel Core i5-6500
Clock speed	3.2 GHz
RAM std	8 GB
HDD	1 TB
Page-description language	PostScript3 (CPSI 3020); PDF Ver1.7 ;PPML Ver3.0; APPE Ver5; PDF/VT 2; PCL (5, 6) emulation
Applicable OS	Windows 8.1/10; Windows Server 2012/R2/2016/2019; Mac OS X 10.11–15

-[1]When using KM IC-609
-[2]Peak volume in Q Zone
-[3]When using DF-713, 200 dpi
– All specifications refer to A4-size paper of 80 gsm quality.
– The support and availability of the listed specifications and functionalities varies depending on operating systems, applications and network protocols as well as network and system configurations.
– Some of the product illustrations contain optional accessories.
– Specifications and accessories are based on the information available at the time of printing and are subject to change without notice.
– Konica Minolta does not warrant that any prices or specifications mentioned will be error-free.
– All brand and product names may be registered trademarks or trademarks of their respective holders and are hereby acknowledged.

Product appearance, configuration and/or specifications are subject to change without notice.
This product is not available for some countries or regions.

Konica Minolta Business Solutions India Pvt. Ltd.

Building No: 8, Tower-C, 10th Floor, DLF Cyber City, Phase-2, Gurugram, Haryana-122002, India

Toll Free No. 1800 2662525 | URL: www.konicaminolta.com | marcom@bin.konicaminolta.in

Connect with us:

11/2021