Name Mohiuddin Ahmad

Computational Mechanics

Department of Mechanical Engineering
ME404/504
Spring Semester, 2014

Exam

1. Concepts/Definitions (16 points): In two to three sentences, define and describe the following concepts:

A. What was Leibniz's contribution to the field of mechanics?

- Developed integral & differential calculus & the idea of continuity.
- He invented the differential & integral sign
- Developed method of separation of variables
- Law of conservation of kinetic energy
- Expressed number in binary → Developed step wheeled calculator.

B. Define Virtual Displacement and Virtual Work, and discuss their relevance to the field of mechanics.

Among all the posible displacements a particle may flow under the action of a force, virtual displacement is the one that minimize the action. Work done by virtual displacement is virtual work. They controls the equilibrium of a mechanical system and is fundamental for analytical mechanics.

C. Give an example of a Scleronomic, Holonomic constraint, and enumerate why the example is scleronomic, and why it is holonomic.

A simple pendulum is ~~ax~~ example of scleronomic holonomic constraint. The x & y coordinates at any instant are related by the radius, hence holonomic (degree of freedom is reduced). It is also scleronomic as ~~total~~ energy stays constant.

D. Classify each of the following examples as either essential or natural boundary conditions:

Geometric — Essential

Neumann — Natural

$JG\frac{d\theta}{dr}\Big|_{x=0} = \kappa\theta(0)$ — Robin → Natural

2. Variational Calculus (14 points): Derive the solution to each of the following problems via the following steps:

a. Calculate the derivatives for the first Euler-Lagrange equation
b. Apply the Euler-Lagrange equation to determine the differential equation governing the solution
c. Apply the boundary conditions and solve the resulting equations

2.1. $I(y) = \int_0^1 x(y(x))^4 + 2x^2(y(x))^3 y'(x)dx$

Subject to $y(0) = 0$ and $y(1) = 1$

2.2. $I(y) = \int_0^1 (1 + (y'(x))^2)^{1/2} dx$

Subject to $y(0) = 0$ and $y(1) = 2$

For maximum credit, show all work.

2.1 a) $L = xy^4 + 2x^2y^3y'$, $\frac{dL}{dy} = 4xy^3 + 2x^2y'3y^2 = 4xy^3 + 6x^2y^2y'$

$\frac{dL}{dy'} = 2x^2y^3$, $\frac{d}{dx}\left(\frac{dL}{dy'}\right) = 2x^2 3y^2y' + 2y^3 2x = 4xy^3 + 6x^2y^2y'$

b) Euler-Lagrange equation $\frac{d}{dx}\left(\frac{dL}{dy'}\right) - \frac{dL}{dy} = 0$

$\Rightarrow 4xy^3 + 6x^2y^2y' - (4xy^3 + 6x^2y^2y') = 0$

$0 = 0$

It is true for any value of x & y. Therefore, there exists no $y = f(x)$ relation that will minimize the system.

Provided B.C.'s satisfied.

2.2 a) $L = \sqrt{1+y'^2}$, $\frac{dL}{dy'} = \frac{1}{2\sqrt{1+y'^2}} \times 2y' = \frac{y'}{\sqrt{1+y'^2}}$

$\frac{dL}{dy} = 0$, then no need for $\frac{d}{dx}\left(\frac{dL}{dy'}\right)$ Good.

b) Then, $\frac{d}{dx}\left(\frac{dL}{dy'}\right) = 0 \Rightarrow \frac{dL}{dy'} = C \Rightarrow \frac{y'}{\sqrt{1+y'^2}} = C$

$\Rightarrow y'^2 = C^2(1+y'^2) = D + Dy'^2$ $[D = C^2]$

$\Rightarrow (D-1)y'^2 = D \Rightarrow y'^2 = \frac{D}{D-1} \Rightarrow y' = E$, $E = \sqrt{\frac{D}{D-1}}$ = constant

c) $\therefore y = Ex + C_2$ $y(0) = 0 \Rightarrow C_2 = 0$, $y(1) = 2$

$\Rightarrow 2 = E$

Therefore, $y = 2x$.

3. Lagrangian Dynamics (20 points): Derive the equations of motion for the following system using Lagrange's principle, and cast in matrix form, using the variables and coordinates given.

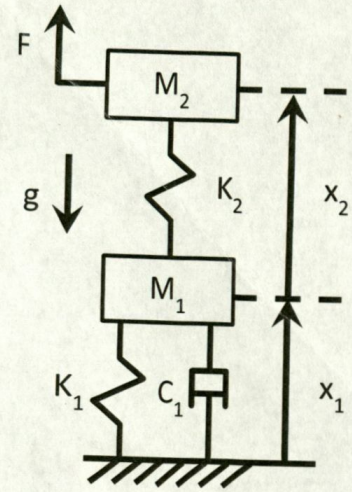

The force $F = \sin(\omega_E t)$. Note that x_1 is an absolute coordinate while x_2 is a relative coordinate. Also, there is no friction, but there is gravity. In your solution, take the following steps:

A. Classify the forces (Active, Constraint, Non-Conservative)
B. Determine the potential and kinetic energy, and the non-conservative forces
C. Apply Lagrange's equation
D. Place in matrix form

For maximum credit, show all work.

(a) Active force: spring forces, No constraint force Gravity

Non conservative force: F + damper force

(b) Potential energy: $\frac{1}{2}K_1x_1^2 + \frac{1}{2}K_2x_2^2 + M_1gx_1 + M_2g(x_1+x_2) = V$

Kinetic energy: $\frac{1}{2}M_1\dot{x}_1^2 + \frac{1}{2}M_2(\dot{x}_2+\dot{x}_1)^2 = T$

Non conservative force: $-c_1\dot{x}_1 + F$

(c) $\mathcal{L} = T - V = \frac{1}{2}M_1\dot{x}_1^2 + \frac{1}{2}M_2(\dot{x}_1+\dot{x}_2)^2 - \frac{1}{2}K_1x_1^2 - \frac{1}{2}K_2x_2^2 - M_1gx_1 - M_2gx_1 - M_2gx_2$

$\frac{\partial \mathcal{L}}{\partial x_1} = -K_1x_1 - M_1g - M_2g$, $\frac{\partial \mathcal{L}}{\partial x_2} = -K_2x_2 - M_2g$

$\frac{\partial \mathcal{L}}{\partial \dot{x}_1} = M_1\dot{x}_1 + M_2(\dot{x}_1+\dot{x}_2) = (M_1+M_2)\dot{x}_1 + M_2\dot{x}_2$

$$\frac{\partial L}{\partial \dot{x}_2} = M_2(\dot{x}_1 + \dot{x}_2)$$

$$\therefore \frac{d}{dt}\left(\frac{\partial L}{\partial \dot{x}_1}\right) = (M_1+M_2)\ddot{x}_1 + M_2\ddot{x}_2$$

$$\frac{d}{dt}\left(\frac{\partial L}{\partial \dot{x}_2}\right) = M_2(\ddot{x}_1 + \ddot{x}_2)$$

c) Lagrange's Equation:

$Q_{NC_p} = \frac{\delta W}{\delta x_p}$ Here work done by non-conservative forces $= F(x_1+x_2) + c\dot{x}_1(-x_1)$

$$Q_{NC,x_1} = \frac{\delta W}{\delta x_1} = F - c\dot{x}_1 \quad , \quad Q_{NC,x_2} = \frac{\delta W}{\delta x_2} = F$$

, Here $F = \sin\omega_E t$.

Therefore, Lagrange's equations will be,

$$\frac{d}{dt}\left(\frac{\partial L}{\partial \dot{x}_1}\right) - \frac{\partial L}{\partial x_1} = Q_{NC,x_1}$$

$$\Rightarrow (M_1+M_2)\ddot{x}_1 + M_2\ddot{x}_2 + k_1x_1 + (M_1+M_2)g = \sin\omega_E t - c\dot{x}_1$$

$$\Rightarrow (M_1+M_2)\ddot{x}_1 + M_2\ddot{x}_2 + c\dot{x}_1 + k_1x_1 + (M_1+M_2)g = \sin\omega_E t - (M_1+M_2)g \quad \text{------(1)}$$

and $\frac{d}{dt}\left(\frac{\partial L}{\partial \dot{x}_2}\right) - \frac{\partial L}{\partial x_2} = Q_{NC,x_2}$

$$\Rightarrow M_2\ddot{x}_1 + M_2\ddot{x}_2 + k_2x_2 + M_2g = \sin\omega_E t$$

$$\Rightarrow M_2\ddot{x}_1 + M_2\ddot{x}_2 + k_2x_2 = \sin\omega_E t - M_2g \quad \text{------(2)}$$

d) In matrix form,

$$\begin{bmatrix} M_1+M_2 & M_2 \\ M_2 & M_2 \end{bmatrix}\begin{Bmatrix} \ddot{x}_1 \\ \ddot{x}_2 \end{Bmatrix} + \begin{bmatrix} c & 0 \\ 0 & 0 \end{bmatrix}\begin{Bmatrix} \dot{x}_1 \\ \dot{x}_2 \end{Bmatrix} + \begin{bmatrix} k_1 & 0 \\ 0 & k_2 \end{bmatrix}\begin{Bmatrix} x_1 \\ x_2 \end{Bmatrix} = \begin{Bmatrix} \cancel{\sin\omega_E t - (M_1+M_2)g} \\ \sin\omega_E t - M_2 g \end{Bmatrix}$$

F only applied to the 2nd mass...

4. Computational Methods (20 points): Consider the following differential equation:

$$-(\sinh x\, u')' + xu = e^x$$

$$0 < x < 1, \qquad u'(0) = T_0, \qquad u(1) = 0$$

State u & v (if appropriate), and find the function in terms of ϕ & φ (if appropriate) for

i. The work function
ii. The residual function
iii. The weak formulation
iv. The L_2 error norm (with exact solution u)
v. The Energy error norm (with exact solution u)

For maximum credit, show all work.

(i) $K = \sinh x$

Work function: $\frac{1}{2}\int_0^1 \left(\sinh x\,(U')^2 - xU^2 - 2e^x U\right) dx$. good.

(ii) Residual function: $\int_0^1 r\, v\, dx = 0$

What are u & v? Are superposition functions used?

$\Rightarrow \int_0^1 (Lu - f)\, v\, dx = 0$

$\Rightarrow \int_0^1 \left[-(\sinh x\, u')' + xu - e^x\right] v\, dx = 0$

(iii) The weak formulation:

$u'(0) = T_0$, $u(1) = 0$
$\therefore v(1) = 0$.

$\int_0^1 \left[-(\sinh x\, u')' + xu - e^x\right] v\, dx = 0$

$\Rightarrow -\int_0^1 (\sinh x\, u')' v\, dx + \int_0^1 xuv\, dx - \int_0^1 e^x v\, dx = 0$

$\Rightarrow -v \sinh x\, u' \Big|_0^1 + \int \sinh x\, u'v'\, dx + \int_0^1 xuv\, dx - \int_0^1 e^x v\, dx = 0$

$\Rightarrow \int_0^1 \sinh x\, u'v'\, dx + \int_0^1 xuv\, dx - \int_0^1 e^x v\, dx - \cancel{v(1)}^{\,0} \sinh(1)\, u'(1)$
$+ v(0) \cancel{\sinh(0)}^{\,0} u'(0) = 0.$

$\Rightarrow \int_0^1 \sinh x\, u'v'\, dx + \int_0^1 xuv\, dx - \int_0^1 e^x v\, dx = 0$

This is the weak formulation.

(iv) If error $e(x) = \hat{u} - u$

Then, $\|e\|_{L^2} = \sqrt{\int_0^1 e^2\,dx} = \sqrt{\int_0^1 (\hat{u}-u)^2\,dx}$

(v) $\|e\|_e = \sqrt{\frac{1}{2}\int_0^1 \sinh x\,(e')^2 - x e^2\,dx}$

$= \sqrt{\frac{1}{2}\int_0^1 \sinh x\,(\hat{u}-u)'^2 - x(\hat{u}-u)^2\,dx}$

5. Method of Weighted Residuals (30 points): Consider the following boundary value problem:

$$-(J(x)G\theta')' = \sin x, \qquad 0 < x < 1$$

$$J(x) = J_0(1+x)$$

$$-GJ_0(1+x)\theta'' - GJ_0\theta' = \sin x.$$

with boundary conditions

$$J(0)G\theta'(0) = T_0, \qquad \theta(1) = 0.$$

a. Find the approximate **two** term solution via the residual function for this system using the Collocation method. In solving for the approximate solution, use an appropriate function to generate homogeneous boundary conditions at both ends of the domain. Your basis functions should be simple polynomials of your choice provided that they are admissible.
b. Find the approximate **two** term solution via the residual function for this system using the Least Squares method. In solving for the approximate solution, use an appropriate function to generate homogeneous boundary conditions at both ends of the domain. Your basis functions should be simple polynomials of your choice provided that they are admissible.
c. Derive the weak form of the system equation
d. Find the **two** term approximate solutions via the Galerkin method using the weak form of the problem that only explicitly satisfies the essential boundary condition. Your basis functions should be simple polynomials of your choice provided that they are admissible and that they make sense given the boundary conditions.
e. Calculate the L_2 and Energy norms, and use a table to present the results for the solutions from parts a, b, and c.
f. Plot your approximate solutions from parts a, b, and c.
g. Discuss your results.

a) Residual function: $\int (\mathcal{L}\theta - f)\, v\, dx = 0$

let, $\hat{\theta} = (x-1)\dfrac{T_0}{J_0 G} + \sum_{j=1}^{N} \alpha_j \phi_j = \underbrace{(x-1)T}_{\hat{\theta}_b} + \underbrace{\sum_{j=1}^{N} \alpha_j \phi_j}_{\theta_n}$

Here, $T = \dfrac{T_0}{J_0 G}$ & $\phi'(0) = 0$, $\phi(1) = 0$

Then,

$$\int (\mathcal{L}(\theta) - f)\, v\, dx = \int [\mathcal{L}(\hat{\theta}_N) - (f - \mathcal{L}(\hat{\theta}_b))]\, v\, dx = 0$$

let, $f^* = f - \mathcal{L}(\hat{\theta}_b) = \sin x + T_0$

Now, $\int [\mathcal{L}(\hat{\theta}_N) - f^*]\, v\, dx = 0$, let, $v = \sum_{k=1}^{N} \beta_k \psi_k$

$\Rightarrow \sum \alpha_j \int_0^1 \mathcal{L}[\phi_j(x)]\psi_k\, dx - \int_0^1 f^* \psi_k\, dx = 0$ $\quad \psi'(0) = 0$, $\psi(1) = 0$.

Then, $K_{jk} = \int_0^1 \mathcal{L}[\varphi_j^0(x)]\,\psi_k\,dx$

$\underset{\sim}{f} = \int_0^1 f^* \psi_k\,dx$

Let,

Now, $\varphi_j^0 = \cos\left[(2j-1)\frac{\pi}{2}x\right]$

$\varphi_j' = -(2j-1)\sin\left[(2j-1)\frac{\pi}{2}x\right]$

$\varphi_j'' = -(2j-1)^2\cos\left[(2j-1)\frac{\pi}{2}x\right]$

Then, $\mathcal{L}(\varphi_j^0) = -J_0G(1+x)\varphi_j'' - J_0G\varphi_j'$

$= J_0G(2j-1)^2(1+x)\cos\left[(2j-1)\frac{\pi}{2}x\right] + J_0G(2j-1)\sin\left[(2j-1)\frac{\pi}{2}x\right]$

for two term solution, $x_1 = 1/3$, $x_2 = 2/3$.

$K_{11} = \mathcal{L}\left[\varphi_1(x_1)\right] = J_0G(2-1)^2(1+1/3)\cos\left[(2-1)\frac{\pi}{2}\times\frac{1}{3}\right] + J_0G(2-1)\sin\left[(2-1)\frac{\pi}{2}\cdot\frac{1}{3}\right]$

$= 1.655\,J_0G$

$K_{12} = \mathcal{L}\left[\varphi_1(x_2)\right] = J_0G(1+2/3)\cos\left[\frac{\pi}{2}\cdot\frac{2}{3}\right] + J_0G\sin\left(\frac{\pi}{2}\cdot\frac{2}{3}\right)$

$= 1.699\,GJ_0$

$K_{21} = \mathcal{L}(\varphi_2(x_1)) = J_0G\left[(4-1)^2(1+1/3)\cos\left[(4-1)\frac{\pi}{2}\cdot\frac{1}{3}\right] + (4-1)\sin\left[(4-1)\frac{\pi}{2}\cdot\frac{1}{3}\right]\right]$

$= 36J_0$

$K_{22} = \mathcal{L}\left[\varphi_2(x_2)\right] = J_0G\left[9(1+2/3)\cos\left(3\cdot\frac{\pi}{2}\cdot\frac{2}{3}\right] + 3\sin\left[3\cdot\frac{\pi}{2}\cdot\frac{2}{3}\right]\right]$

$= -15\,GJ$

$\underset{\sim}{f} = \int f^*\psi_k\,dx = \int f^*\delta(x-x_k)\,dx = f^*(x_k)$

$\therefore\ f_1 = \sin(\tfrac{1}{3}) + T_0 = 0.327 + T_0$

$f_2 = \sin(2/3) + T_0 = 0.618 + T_0$.

Therefore:

$$J_0 G \begin{bmatrix} 1.655 & 1.699 \\ -13 & -15 \end{bmatrix} \begin{Bmatrix} \alpha_1 \\ \alpha_2 \end{Bmatrix} = \begin{Bmatrix} 0.327 + T_0 \\ 0.618 + T_0 \end{Bmatrix}$$

Solving, $\begin{Bmatrix} \alpha_1 \\ \alpha_2 \end{Bmatrix} = \frac{1}{GJ_0} \begin{Bmatrix} 0.199 \\ 0.002 \end{Bmatrix} + \frac{T_0}{GJ_0} \begin{Bmatrix} 0.558 \\ 0.077 \end{Bmatrix}$

assuming $T_0 = 0$ & $GJ_0 = 1$ $\begin{Bmatrix} \alpha_1 \\ \alpha_2 \end{Bmatrix} = \begin{Bmatrix} 0.199 \\ 0.002 \end{Bmatrix}$

good

Hence,

$$\hat{\theta} = 0.199 \cos(\tfrac{\pi}{2}x) + 0.002 \cos(\tfrac{3\pi}{2}x)$$

(b) least square method:

$K_{ij} = \int \mathcal{L}(\phi_j)\mathcal{L}(\phi_i)\, d\Omega$, assuming $GJ_0 = 1$ & $T_0 = 0$

$$\therefore \quad K_{11} = \int_0^1 \left[(1+x)\cos(\tfrac{\pi}{2}x) + \sin(\tfrac{\pi}{2}x)\right]^2 dx = 2.3176$$

$$K_{12} = K_{21} = \int_0^1 \left[(1+x)\cos(\tfrac{\pi}{2}x) + \sin(\tfrac{\pi}{2}x)\right]\left[9(1+x)\cos(\tfrac{3\pi}{2}x) + 3\sin(\tfrac{3\pi}{2}x)\right] dx$$

$$= -6.3274$$

$$K_{22} = \int_0^1 \left[9(1+x)\cos(\tfrac{3\pi}{2}x) + 3\sin(\tfrac{3\pi}{2}x)\right]^2 dx = 104.859$$

$$\underset{\sim}{f_j} = \int_0^1 \mathcal{L}(\phi_j) f\, dx$$

$$f_1 = \int_0^1 \left[(1+x)\cos(\tfrac{\pi}{2}x) + \sin(\tfrac{\pi}{2}x)\right]\sin x\, dx = 1.5$$

$$f_2 = \int_0^1 \left[9(1+x)\cos(\tfrac{3\pi}{2}x) + 3\sin(\tfrac{3\pi}{2}x)\right] dx = -3.5884$$

Then,

$$\begin{bmatrix} 2.317 & -6.3274 \\ -6.3274 & 104.859 \end{bmatrix} \begin{Bmatrix} \alpha_1 \\ \alpha_2 \end{Bmatrix} = \begin{Bmatrix} 1.5 \\ -3.5884 \end{Bmatrix}$$

$$\Rightarrow \begin{Bmatrix} \alpha_1 \\ \alpha_2 \end{Bmatrix} = \begin{Bmatrix} 0.663 \\ 0.006 \end{Bmatrix}$$

Therefore, $\hat{\theta} = 0.663 \cos(\frac{\pi}{2}x) + 0.086 \cos(\frac{3\pi}{2}x)$

(c) Weak form :

$$\int \left(-(J_0 G(1+x)\theta')' - \sin x \right) v \, dx = 0$$

$$\Rightarrow -\int (J_0 G(1+x)\theta')' v \, dx - \int \sin x \, v \, dx = 0$$

$$\Rightarrow -J_0 G(1+x)\theta' v \Big|_0^1 + \int J_0 G(1+x)\theta' v' \, dx - \int \sin x \, v \, dx = 0$$

$$\Rightarrow \int_0^1 J_0 G(1+x)\theta' v' \, dx - \int_0^1 \sin x \, v \, dx - J_0 G(2)\theta'(1)\cancel{v(1)}^{\,0} + \underbrace{J_0 G \theta'(0)}_{T_0} v(0) = 0$$

$$\Rightarrow \int_0^1 G J_0 (1+x)\theta' v' \, dx - \int_0^1 \sin x \, v \, dx + T_0 v(0) = 0$$

This is the weak form.

(d) Let, $\theta = \sum_{j=1}^{N} \alpha_j \varphi_j$, $\quad \varphi(1) = 0 \quad \Big| \quad v = \sum_{k=1}^{N} \beta_k \varphi_k$

Then, from weak form,

$$\sum \alpha_j \int_0^1 G J_0 (1+x) \varphi_j' \varphi_k' - \int_0^1 \sin x \, \varphi_k \, dx + T_0 \varphi_k(0) = 0$$

$$K_{ij} = \int_0^1 G J_0 (1+x) \varphi_i' \varphi_j' \, dx, \quad \underset{\sim}{f} = \int_0^1 \sin x \, \varphi_k \, dx - T_0 \varphi_k(0).$$

Let $\varphi_1 = (1-x)$, $\varphi_2 = x^2(1-x)$, assuming $GJ_0 = 1$ & $T_0 = 0$

$\varphi_1' = -1 \quad \varphi_2' = 2x - 3x^2$

$K_{11} = \int_0^1 (1+x)(-1)(-1) \, dx = 1.5$, $K_{12} = K_{21} = \int_0^1 (1+x)(-1)(2x-3x^2) \, dx$

$= 0.083$.

$K_{22} = \int_0^1 (1+x)(2x-3x^2)^2 \, dx$

$= 0.233$

$$f_1 = \int_0^1 \sin x \times (1-x)\,dx = 0.1585$$

$$f_2 = \int_0^1 \sin x \times (x^2 - x^3)\,dx = 0.046$$

Then,
$$\begin{bmatrix} 1.5 & 0.083 \\ 0.083 & 0.233 \end{bmatrix} \begin{bmatrix} \alpha_1 \\ \alpha_2 \end{bmatrix} = \begin{Bmatrix} 0.1585 \\ 0.046 \end{Bmatrix}$$

$$\therefore \begin{Bmatrix} \alpha_1 \\ \alpha_2 \end{Bmatrix} = \begin{Bmatrix} 0.097 \\ 0.163 \end{Bmatrix}$$

Therefore: $\hat{\theta} = 0.097(1-x) + 0.163(x^2 - x^3)$

(e) The exact solution of the field equation is determined using $\sin x = x - x^3/3!$. The exact solution is,

$$\theta = \frac{1}{24}\left[11x - \frac{11x^2}{2} - \frac{x^3}{3} + \frac{x^4}{4}\right] - \frac{11}{24}\ln(1+x) + 0.092$$

Nice work!

Then for collocation method:

$$\text{error } e(x) = \hat{\theta} - \theta = 0.199\cos\left(\tfrac{\pi}{2}x\right) + 0.002\cos\left(\tfrac{3\pi}{2}x\right) - \theta$$

$\therefore$ L_2 Norm $\|e(x)\|_{L_2} = \sqrt{\int_0^1 (e(x))^2\,dx} = \sqrt{4.95} = 2.22$

E Norm $\|e(x)\|_e = \sqrt{\frac{1}{2}\int_0^1 (1+x)\left[e'(x)\right]^2 dx}$

here, $e'(x) = -0.199 \times \frac{\pi}{2}\sin\left(\frac{\pi}{2}x\right) - 0.002 \times \frac{3\pi}{2}\sin\left(\frac{3\pi}{2}x\right) - \frac{1}{24}\left[11 - 11x - x^2 + x^3\right] + \frac{11}{24(1+x)}$.

$$= -0.312\sin\left(\tfrac{\pi}{2}x\right) - 0.009\sin\left(\tfrac{3\pi}{2}x\right) - \frac{1}{24}\left[11 - 11x - x^2 + x^3\right] + \frac{11}{24(1+x)}.$$

$\therefore \|e(x)\|_e = 0.093$

For least square method:

$$e(x) = 0.663\cos(\tfrac{\pi}{2}x) + 0.006\cos(\tfrac{3\pi}{2}x) - \frac{1}{24}\left[11x - \frac{11x^2}{2} - \frac{x^3}{3} + \frac{x^4}{4}\right] + \frac{11}{24}\ln(1+x) - 0.092$$

$$e'(x) = -1.04\sin(\tfrac{\pi}{2}x) - 0.028\sin(\tfrac{3\pi}{2}x) - \frac{1}{24}\left[11 - 11x - x^2 + x^3\right] + \frac{11}{24(1+x)}$$

Then

$$\|e\|_{L_2} = \sqrt{\int_0^1 (e(x))^2\,dx} = 0.59$$

$$\|e\|_e = \sqrt{\frac{1}{2}\int_0^1 (1+x)(e'(x))^2\,dx} = 0.571$$

For Galerkin method using weak form:

$$e(x) = 0.097(1-x) + 0.163(x^2 - x^3) - \frac{11}{24}x + \frac{11}{48}x^2 + \frac{x^3}{72} - \frac{x^4}{96} + \frac{11}{24}\ln(1+x) - 0.092$$

$$= -0.555x + 0.392x^2 - 0.149x^3 - \frac{x^4}{96} + \frac{11}{24}\ln(1+x) + 0.005$$

$$e'(x) = -0.555 + 0.784x - 0.447x^2 - \frac{x^3}{24} + \frac{11}{24(1+x)}$$

$$\therefore \|e\|_{L_2} = \sqrt{\int_0^1 (e(x))^2\,dx} = 0.006$$

$$\|e\|_e = \sqrt{\frac{1}{2}\int_0^1 (1+x)(e'(x))^2\,dx} = 0.028$$

Method	L_2 norm	E norm
Collocation	2.22	0.093
Least square	0.59	0.571
Galerkin	0.006	0.028

f) Plot for solution in a, b, & c.

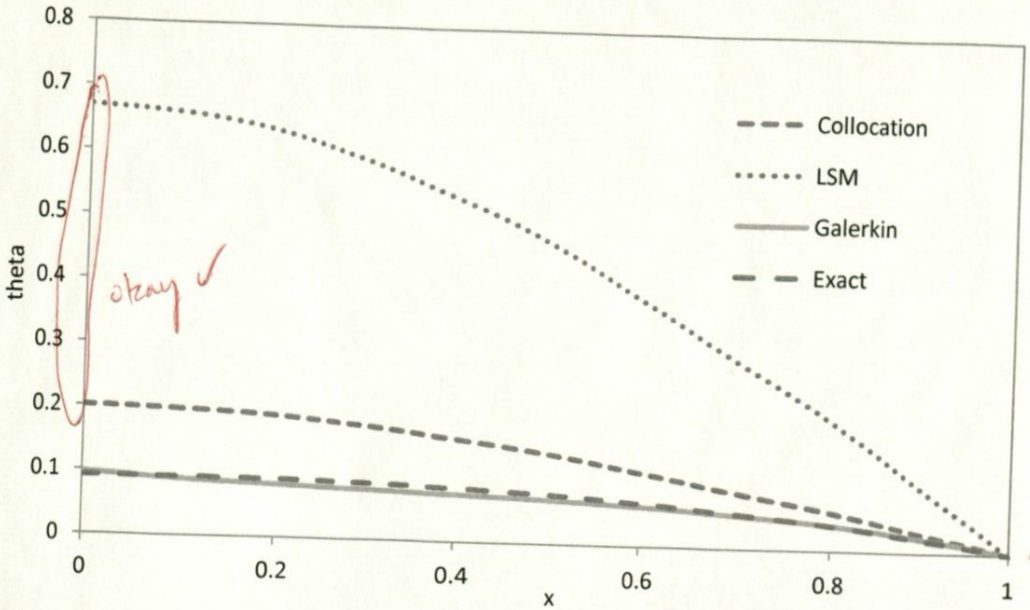

g) Galerkin method from weak form gives the most accurate solution. It can be seen in figure above or in error norm table.
For all the methods, it can be seen from the plot that, they maintain closely the boundary condition. $[\theta'(0)=0, \theta(1)=0]$.

Note: After finishing this problem, I noticed that you prefered simple polynomials for basis function. I didn't have much time to redo the problem.
Exact solution is not given. So, to solve it, I simplified $\sin x$ by taylor series expansion.

Extra Credit. Finite Element Method (12 points): Derive the elemental stiffness matrix and force vector for problem 5 using piecewise linear basis functions, and calculate its value as a function of global position x.

field equation : $-\left(J_0 G(1+x)\,\theta'\right)' = \sin x$

weak form : $\int G J_0 (1+x)\,\theta' v' \,dx - \int \sin x \, v \, dx + T_0 v(0) = 0$

$N=2$ $\quad \mathbb{K}^e_{jk} = \int_0^h G J_0 (1+x)\, \psi_j^{e\prime} \psi_k^{e\prime} \, d\xi \;, \quad f_k^e = \int_0^h \sin x \, \psi_k^e \, d\xi - T_0 \psi_k^e(0)$

Now, $x = x_J + \xi$, $\psi_A = 1 - \xi/h$, $\psi_B = \xi/h$, $\psi_B' = \frac{1}{h}$

For element 1: just. $\psi_A' = -1/h$

$x_J = 0$

$\therefore \quad x = \xi$,

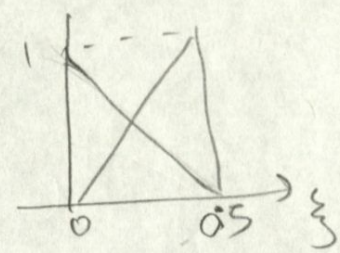

Then $K_{11}^1 = G J_0 \int_0^h (1+\xi) \times \left(-\frac{1}{h}\right)\left(\frac{-1}{h}\right) d\xi$

$= \frac{G J_0}{h^2} \int_0^h (1+\xi)\, d\xi = \frac{G J_0}{h^2} \left(\xi + \xi^2/2\right)_0^h$

$= \frac{G J_0}{0.5^2}\left(0.5 + 0.5^2/2\right) = 2.5\, G J_0$

$K_{12}^1 = K_{21}^1 = -\frac{G J_0}{h^2} \int_0^h (1+\xi)\, d\xi = -2.5\, G J_0$

$K_{22}^1 = G J_0 \int_0^1 (1+\xi)(1/h)(1/h)\, d\xi = \frac{G J_0}{h^2} \int_0^1 (1+\xi)\, d\xi$

$= 2.5\, G J_0$

$\therefore \quad \mathbb{K}^1 = 2.5\, G J_0 \begin{bmatrix} 1 & -1 \\ -1 & 1 \end{bmatrix}$

$f_1^1 = \int_0^{0.5} \sin\xi \times \left(1 - \xi/0.5\right) d\xi - T_0 (1) = 0.041 - T_0$

$f_2^1 = \int_0^{0.5} \sin\xi \cdot \frac{\xi}{0.5} \cdot d\xi - T_0 \cdot 0 = 0.082$

$$f = \begin{Bmatrix} 0.041 - T_0 \\ 0.0812 \end{Bmatrix}$$

element 2:

$$x = x_j + \xi = 0.5 + \xi$$

$$\therefore K_{11}^2 = GJ_0 \int_0^{0.5} (1 + 0.5 + \xi)\left(-\frac{1}{h}\right)\left(-\frac{1}{h}\right) d\xi = \frac{GJ_0}{h^2}\int_0^{0.5} (1.5 + \xi)\, d\xi$$

$$= GJ_0 \times 3.5$$

$$K_{12}^2 = K_{21}^2 = \frac{GJ_0}{-h^2}\int_0^{0.5} (1.5 + \xi)\, d\xi = -3.5\, GJ_0$$

$$K_{22} = 3.5\, GJ_0$$

$$\therefore \mathbb{K}^2 = 3.5\, GJ_0 \begin{bmatrix} 1 & -1 \\ -1 & 1 \end{bmatrix}$$

$$f_1^2 = \int_0^{0.5} \sin(0.5 + \xi)\left(1 - \xi/0.5\right) d\xi - T_0\, \varphi(0)$$

$$= -0.0878 - T_0$$

$$f_2^2 = \int_0^{0.5} \sin(0.5 + \xi)\left(\xi/0.5\right) d\xi - T_0 \times 0$$

$$= 0.22367$$

$$\underset{\sim}{f}^2 = \begin{Bmatrix} -0.0878 - T_0 \\ 0.224 \end{Bmatrix}$$

$$\therefore \text{Global stiffness matrix } \mathbb{K} = \begin{bmatrix} 2.5\, GJ_0 & -2.5\, GJ_0 & \\ -2.5\, GJ_0 & 2.5\, GJ_0 + 3.5\, GJ_0 & -3.5\, GJ_0 \\ & -3.5\, GJ_0 & 3.5\, GJ_0 \end{bmatrix}$$

$$= GJ_0 \begin{bmatrix} 2.5 & -2.5 & 0 \\ -2.5 & 6 & -3.5 \\ 0 & -3.5 & 3.5 \end{bmatrix}$$

$$\underset{\sim}{f} = \begin{Bmatrix} 0.041 - T_0 \\ 0.0812 - 0.0878 - T_0 \\ 0.224 \end{Bmatrix} = \begin{Bmatrix} 0.041 - T_0 \\ -0.006 - T_0 \\ 0.224 \end{Bmatrix}$$

Good. Next time solve for element j instead → Much easier to consider an arbitrary number of elements that way.

$$K_{ij}^e = \int_0^h (\xi + x_e)\, \psi_i^{e\prime} \psi_j^{e\prime}\, d\xi$$

$$= \int (\xi)\left(\tfrac{1}{h}\right)^2 (-1)^{i+j}\, d\xi + x_e \int \left(\tfrac{1}{h}\right)^2 (-1)^{i+j} \cdot d\xi$$

$$\left(\frac{1}{h^2}\right)(-1)^{i+j} \cdot \left[\tfrac{1}{2}\xi^2 + \underbrace{h(e-1)}_{x_j} \cdot \xi\right]_0^h$$

$$= \left(\tfrac{1}{h^2}\right)(-1)^{i+j}\left[\frac{h^2}{2} + h^2(e-1)\right]$$

$$= \left(\tfrac{1}{h^2}\right)(-1)^{i+j} \cdot \left(h^2\left(e - \tfrac{1}{2}\right)\right) = (-1)^{i+j}\left(e - \tfrac{1}{2}\right)$$

$$K_e = \begin{bmatrix} e - \tfrac{1}{2} & \tfrac{1}{2} - e \\ \tfrac{1}{2} - e & e - \tfrac{1}{2} \end{bmatrix}$$

Global:

$$\mathbb{K} = \begin{bmatrix} 1/2 & -1/2 & & & \\ -1/2 & 1/2+3/2 & -3/2 & & \\ & -3/2 & 3/2+5/2 & & \\ & & & \left[(n-1)-1/2 + n-1/2\right] & 1/2-N \\ & & & 1/2-N & N-1/2 \end{bmatrix}$$

for $E = 1:N$

$\mathbb{K}$