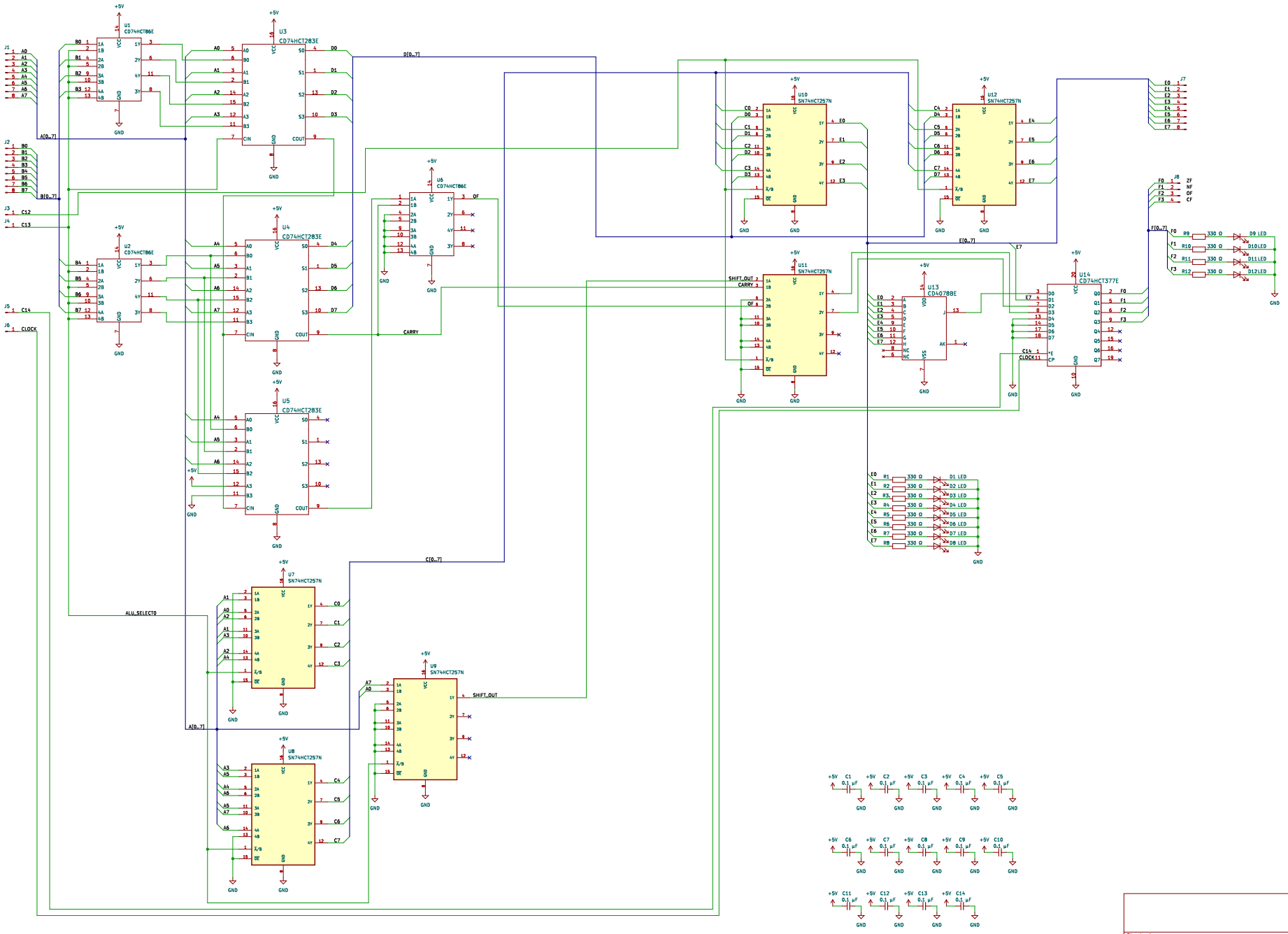

Sheet: /
File: 1281_alu_draft2.kicad_sch

Title: 1281 ALU

Size: A2	Date: 2023-11-18	Rev: 2
KiCad E.D.A. kicad (6.0.11)		Id: 1/1