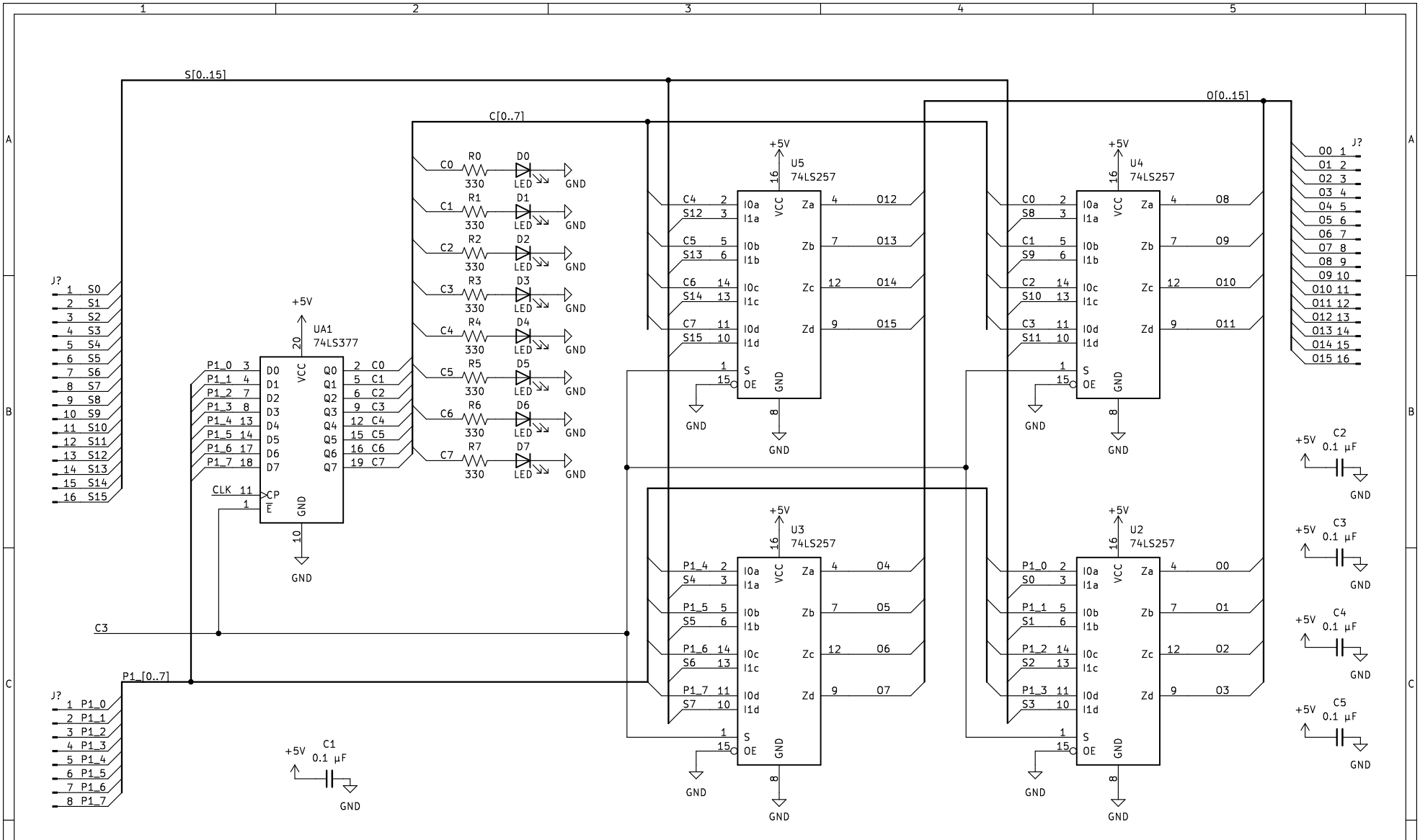

sdmay24-14

Sheet: /

File: i281_writeback.kicad_sch

Title: i281 Wireback

Size: USLetter	Date: 2024-01-25	**Rev: A**
KiCad E.D.A. kicad (6.0.11)		Id: 1/1