© COPYRIGHT EDWARDS LIMITED. THIS IS THE PROPERTY OF EDWARDS LIMITED.
IT MUST NOT BE COPIED OR OTHERWISE MADE USE OF WITHOUT WRITTEN PERMISSION.

TERMINATION POINTS			
TP #	SIZE/TYPE	DESCRIPTION	QTY
TP-01	3/8" FNPT	AIR SUPPLY; MANIFOLD	1
TP-02	DN25 ISO-KF	EXHAUST, RV3 ROTARY VANE PUMP	1
TP-03	1/8" BSP	EXHAUST, mXDS3 SCROLL PUMP	1
TP-04	DN40 ISO-KF	PORT, CHAMBER (BLANKED)	1
TP-05	DN25 ISO-KF	PORT, CHAMBER (BLANKED)	3
TP-06	DN16 ISO-KF	VENT PORT, CHAMBER (BLANKED)	1

ELECTRICAL TERMINATION POINTS		
TPE #	SIZE/TYPE	DESCRIPTION
TPE-01	120VAC	ELECTRICAL CONTROL PANEL

CUSTOMER APPROVAL PRINT

CUSTOMER TO RETURN SIGNED PRINT
BY DATE ON TRANSMITTAL TO
AVOID DELAY IN FABRICATION

CHECK ONE

- ☐ APPROVED
- ☐ APPROVED AS NOTED
- ☐ REJECTED

BY _____ DATE _____

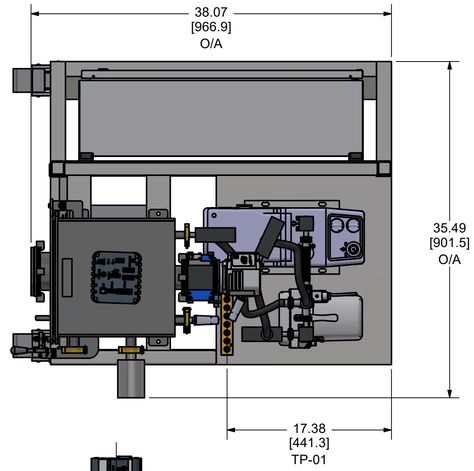

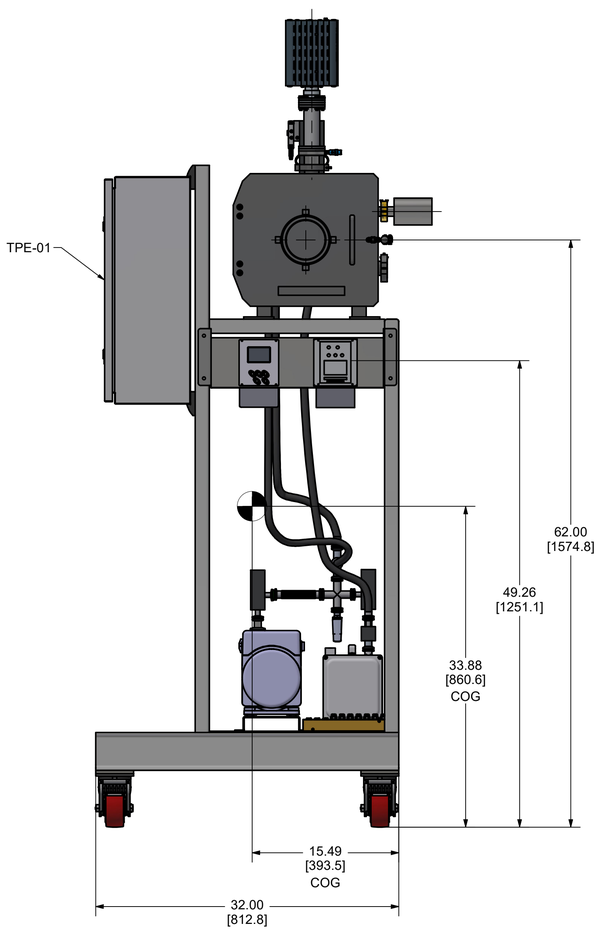

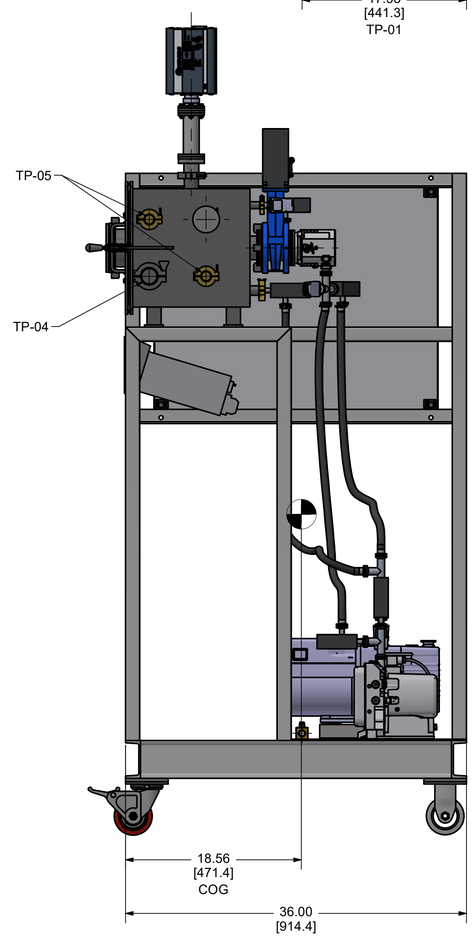

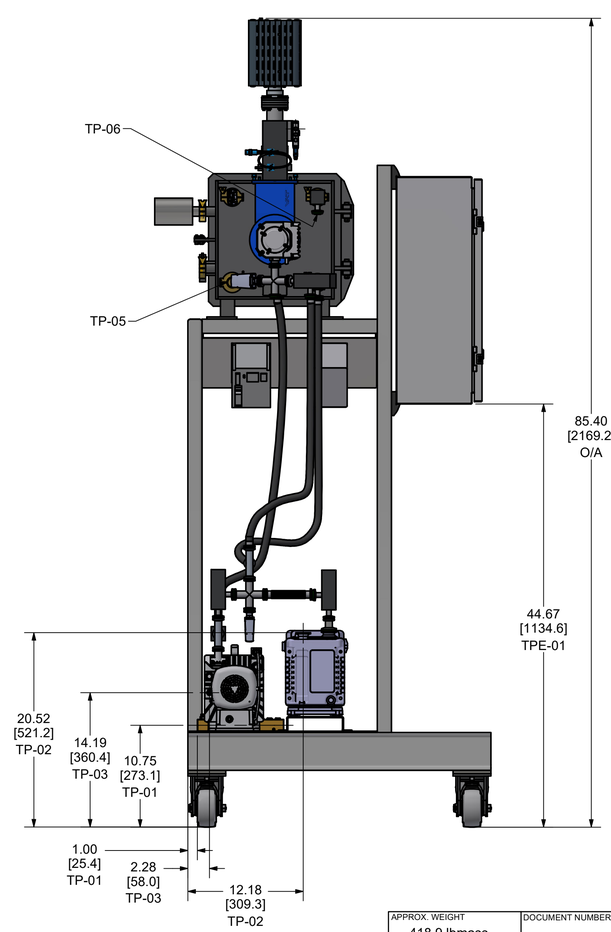

NOTES:

1. DIMENSIONS ARE SHOWN IN INCHES, MILLIMETERS ARE FOR REFERENCE ONLY.
2. APPROXIMATE CENTER OF GRAVITY (COG) REPRESENTED BY

ORIGINAL SCALE: 1/8	APPROX. WEIGHT 418.9 lbmass	DOCUMENT NUMBER 850058085/090	
DRAWN BY: ROTHRAUFF, Z.	GENERAL TOLERANCES: ALL DIMS IN INCHES, .X ± 0.5, .XX ±0.25, .XXX ±0.125, ANGLES ±2°-30' UNLESS OTHERWISE STATED	COMPONENT COSMOS 12	
DATE: 10/11/2024		MATERIAL	
TECHNICAL: GRAMBUSCH, T.		FINISH	
TECHNICAL DATE: 10/11/2024	MACHINED COMPONENTS: SURFACE FINISH TO BE 125 RMS MAX UNLESS OTHERWISE STATED		
3rd ANGLE PROJECTION	INVENTOR DRAWING		

SIZE	DRAWING NUMBER	SHEET No.	ISSUE
D	NRYBTQ090	1 of 4	A0

ISSUE A0
DRAWING NUMBER NRYBTQ090
SIZE D
COSMOS 12
REVISED BY:
EC No.:
DATE:

© COPYRIGHT EDWARDS LIMITED. THIS IS THE PROPERTY OF EDWARDS LIMITED.
IT MUST NOT BE COPIED OR OTHERWISE MADE USE OF WITHOUT WRITTEN PERMISSION.

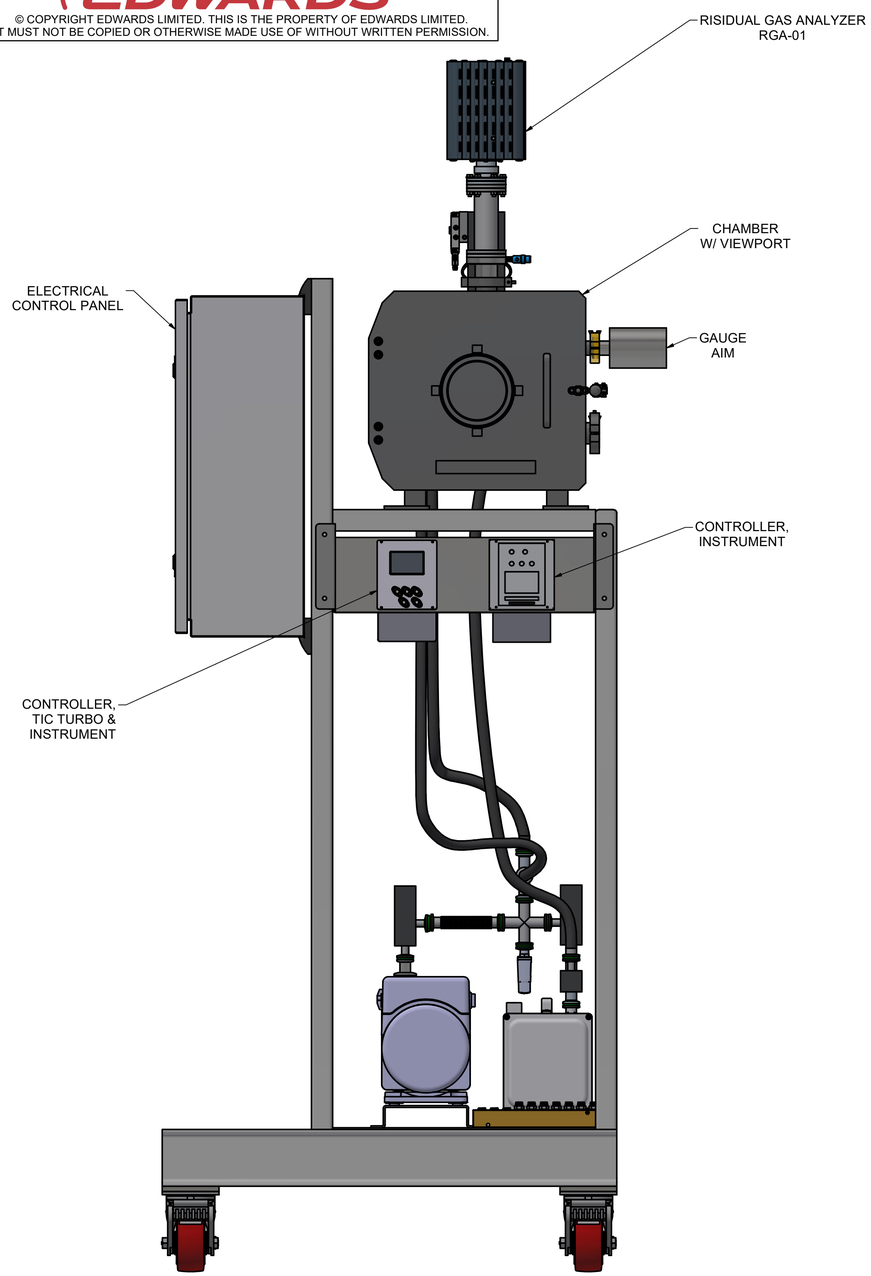

FRONT VIEW
SCALE 3/16

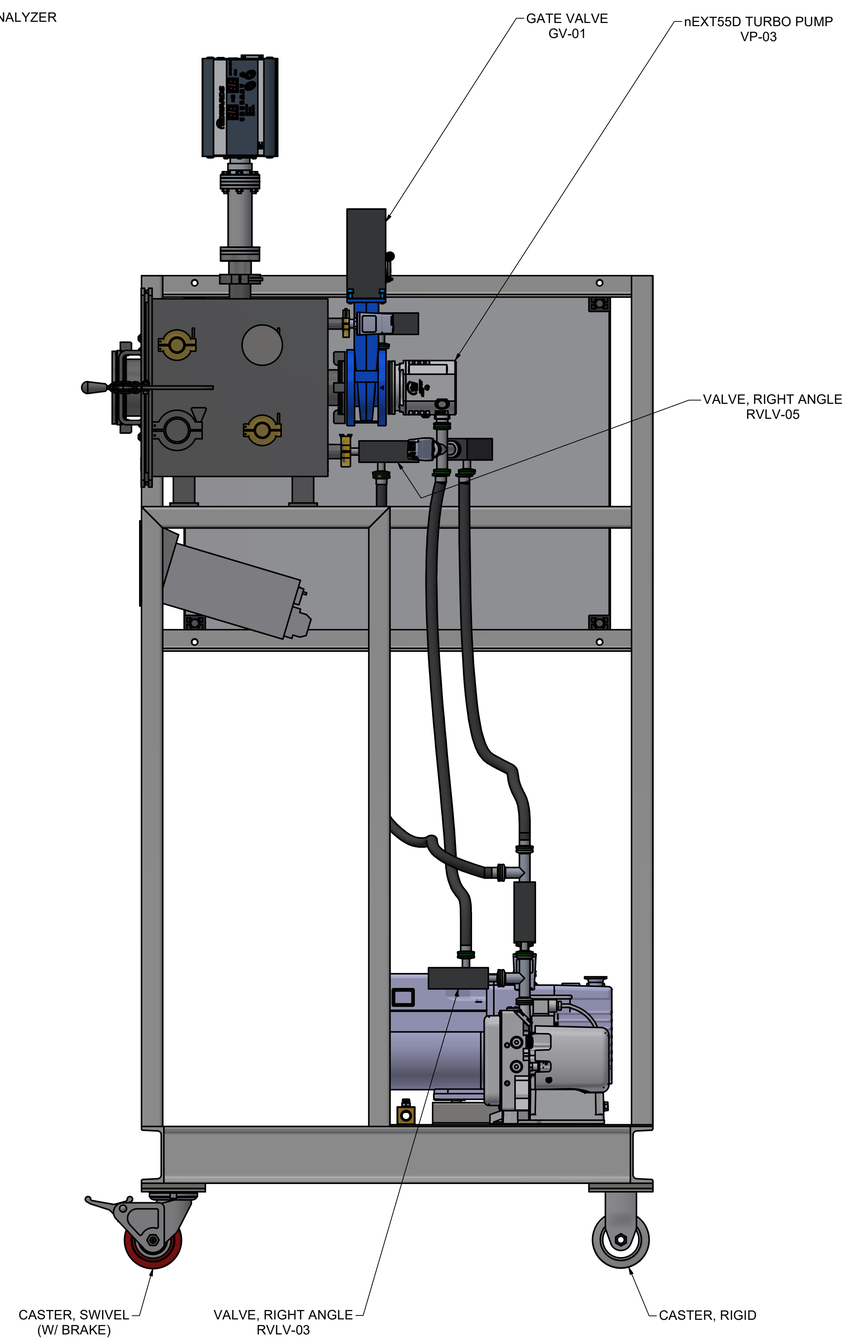

RIGHT SIDE VIEW
SCALE 3/16

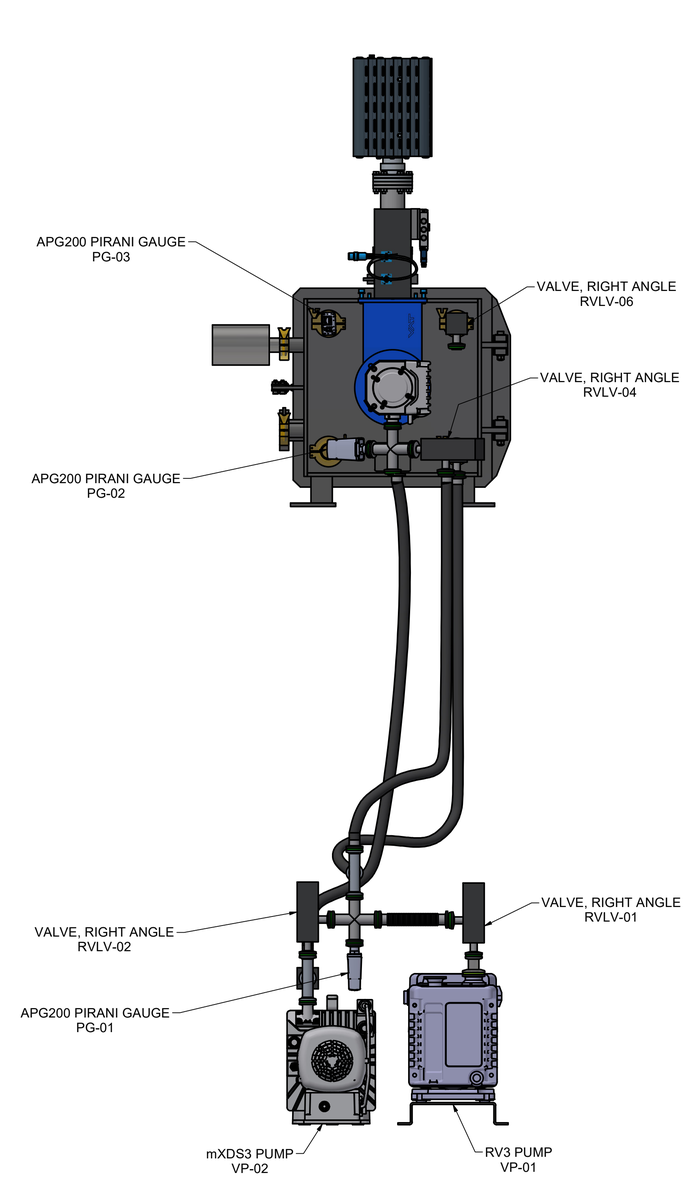

REAR VIEW
(PUMPING SYSTEM ONLY)
SCALE 3/16

ORIGINAL SCALE: 3/16	APPROX. WEIGHT 418.9 lbmass	DOCUMENT NUMBER 850058085/090	
DRAWN BY: ROTHRAUFF, Z.	GENERAL TOLERANCES	COMPONENT COSMOS 12	
DATE: 10/11/2024	ALL DIMS IN INCHES .X ± 0.5 .XX ±0.25 .XXX ±0.125 ANGLES ±2°-30' UNLESS OTHERWISE STATED	MATERIAL	
TECHNICAL: GRAMBUSCH, T.		FINISH	
TECHNICAL DATE: 10/11/2024	MACHINED COMPONENTS		
3rd ANGLE PROJECTION	SURFACE FINISH TO BE 125 RMS MAX UNLESS OTHERWISE STATED		
	INVENTOR DRAWING		

SIZE	DRAWING NUMBER	SHEET No.	ISSUE
D	NRYBTQ090	2 of 4	A0

REVISED BY:
EC No.:
DATE:

ISSUE A0
DRAWING NUMBER NRYBTQ090
SIZE D
COSMOS 12

© COPYRIGHT EDWARDS LIMITED. THIS IS THE PROPERTY OF EDWARDS LIMITED.
IT MUST NOT BE COPIED OR OTHERWISE MADE USE OF WITHOUT WRITTEN PERMISSION.

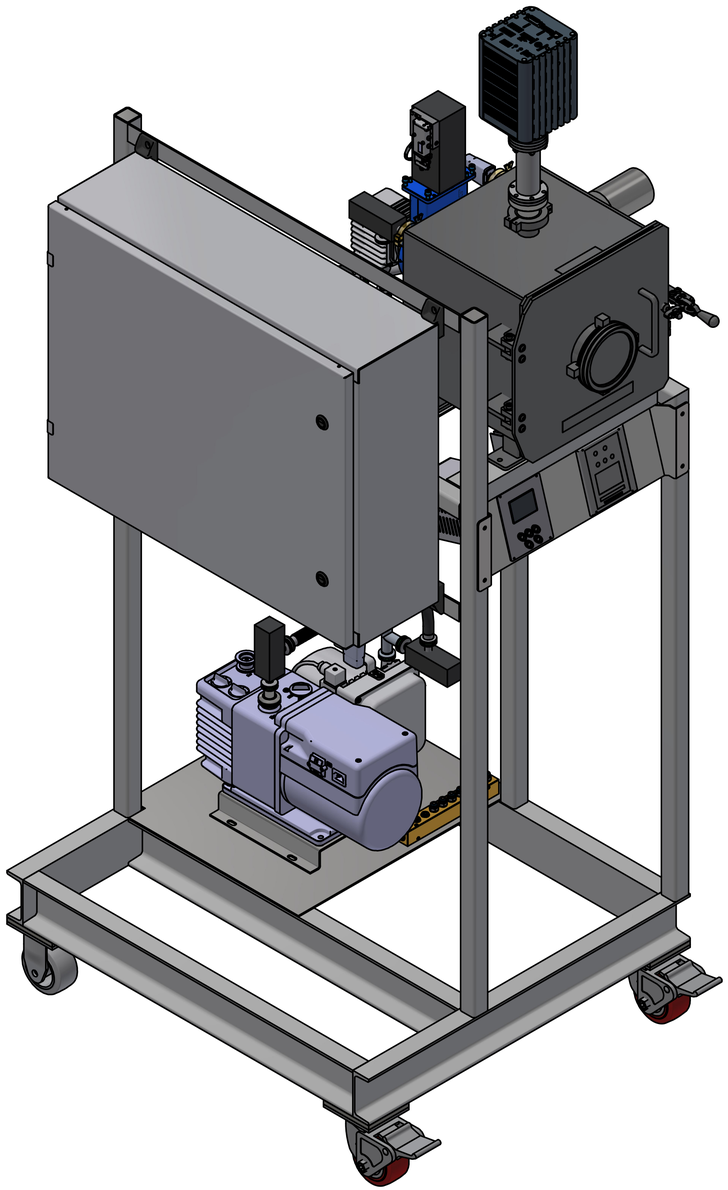

ISO VIEW: FRONT LEFT
SCALE 3/16

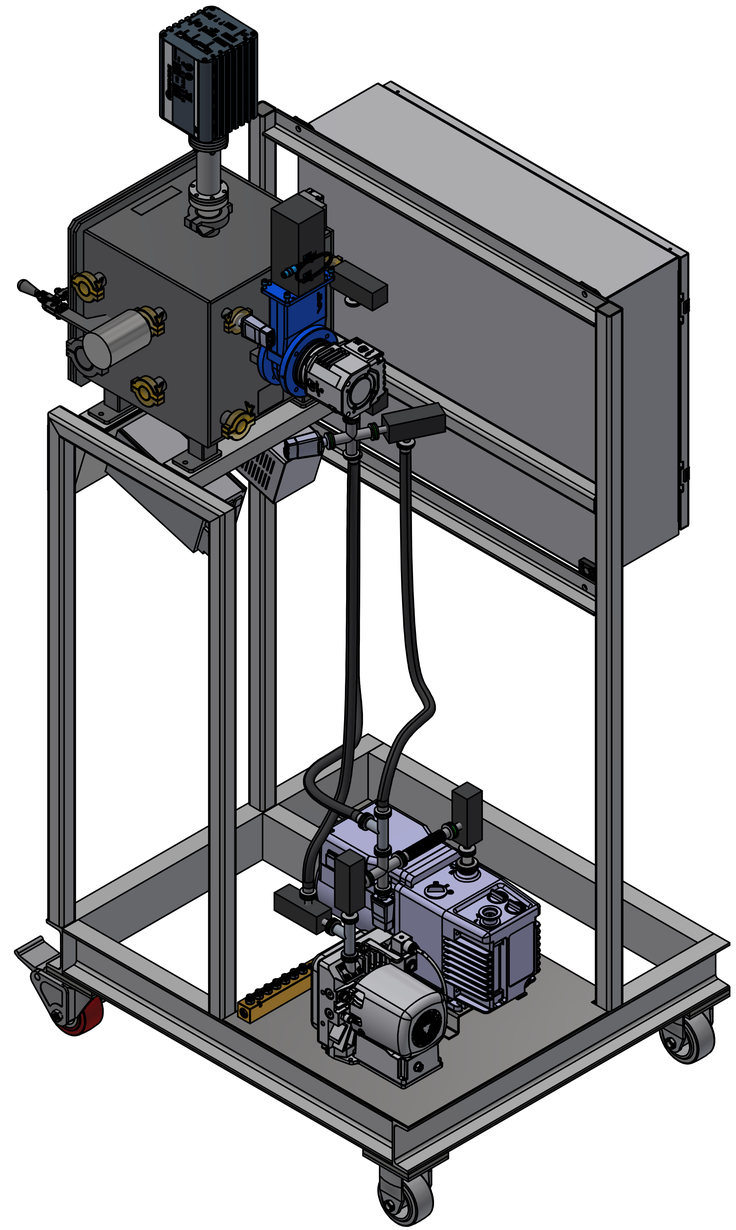

ISO VIEW: REAR RIGHT
SCALE 3/16

ORIGINAL SCALE: 3/16	APPROX. WEIGHT 418.9 lbmass	DOCUMENT NUMBER 850058085/090	
DRAWN BY: ROTHRAUFF, Z.	GENERAL TOLERANCES	COMPONENT COSMOS 12	
DATE: 10/11/2024	ALL DIMS IN INCHES .X ±0.5 .XX ±0.25 .XXX ±0.125 ANGLES ±2°-30' UNLESS OTHERWISE STATED	MATERIAL	
TECHNICAL: GRAMBUSCH, T.	MACHINED COMPONENTS	FINISH	
TECHNICAL DATE: 10/11/2024	SURFACE FINISH TO BE 125 RMS MAX UNLESS OTHERWISE STATED.	SIZE D	DRAWING NUMBER NRYBTQ090 / SHEET No. 3 of 4 / ISSUE A0
3rd ANGLE PROJECTION	INVENTOR DRAWING		

ISSUE A0
DRAWING NUMBER NRYBTQ090
SIZE D
COSMOS 12
REVISED BY:
EC No.:
DATE:

REV	ECO #	REASON FOR CHANGE	DATE (YYYY-MM-DD)	DESIGNER
A0		INITIAL RELEASE	10/14/2024	ROTHRAUFF, Z.

HISTORY SHEET

DRAWING NUMBER NRYBTQ090

EDWARDS