© COPYRIGHT EDWARDS LIMITED. THIS IS THE PROPERTY OF EDWARDS LIMITED.
IT MUST NOT BE COPIED OR OTHERWISE MADE USE OF WITHOUT WRITTEN PERMISSION.

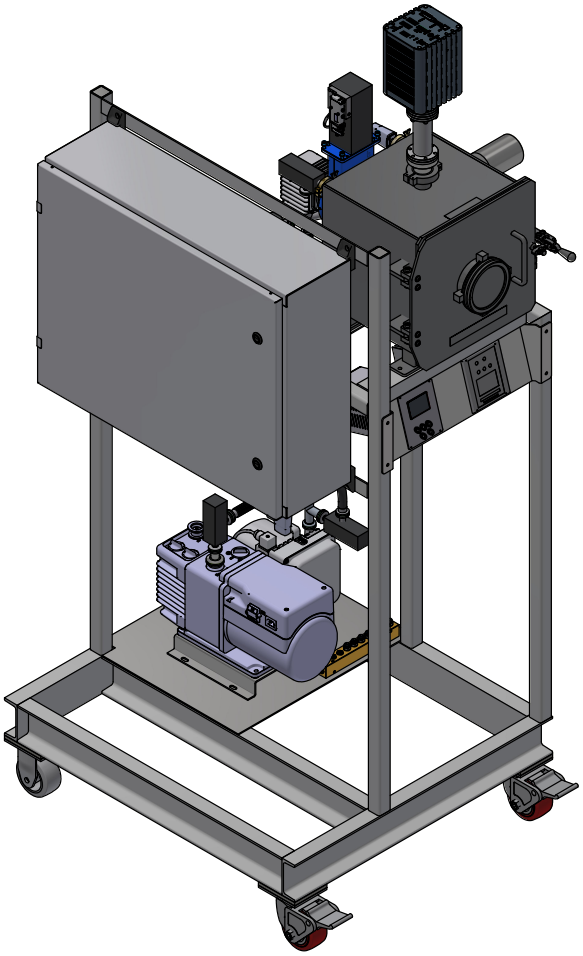

ISO VIEW: FRONT LEFT
SCALE 3/16

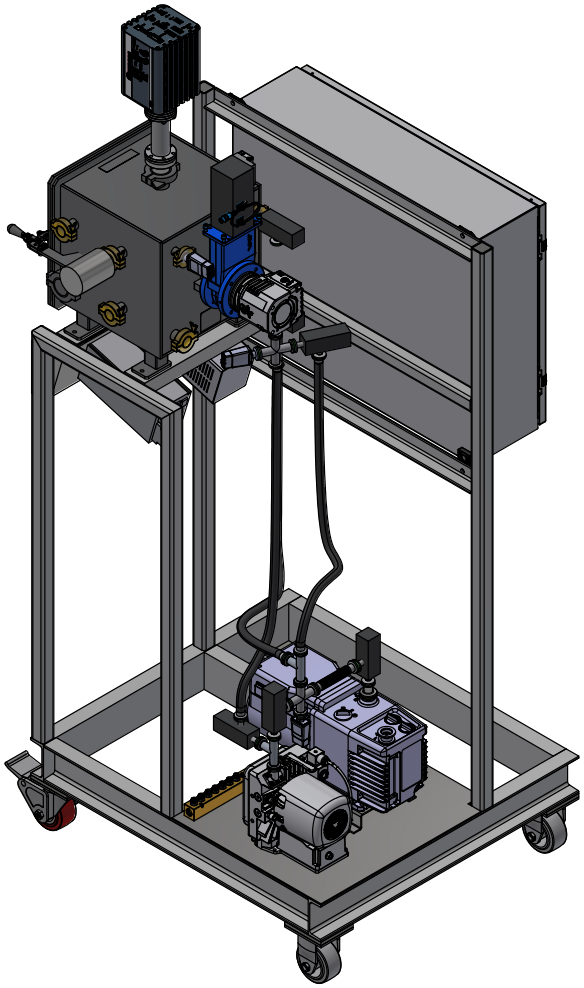

ISO VIEW: REAR RIGHT
SCALE 3/16

ORIGINAL SCALE: 3/16	APPROX. WEIGHT 418.9 lbmass	DOCUMENT NUMBER 850058085/090	
DRAWN BY: ROTHRAUFF, Z.	GENERAL TOLERANCES ALL DIMS IN INCHES .X ± 0.5 .XX ±0.25 .XXX ±0.125 ANGLES ±2°-30' UNLESS OTHERWISE STATED.	COMPONENT COSMOS 12	
DATE: 10/11/2024		MATERIAL	
TECHNICAL: GRAMBUSCH, T.	MACHINED COMPONENTS SURFACE FINISH TO BE 125 RMS MAX UNLESS OTHERWISE STATED.	FINISH	
TECHNICAL DATE: 10/11/2024		SIZE D	DRAWING NUMBER NRYBTQ090 / SHEET No. 3 of 4
THIRD ANGLE PROJECTION	INVENTOR DRAWING		

SIZE	DRAWING NUMBER	ISSUE
D	NRYBTQ090	A0

COSMOS 12

REVISED BY:
EC No.:
DATE:
ISSUE A0