Computer Organization and Architecture

Module 7

Prof. Indranil Sengupta

Dr. Sarani Bhattacharya

Department of Computer Science and Engineering

IIT Kharagpur

Arithmetic Pipeline

Basic Concept

- Various arithmetic operations require a set of simpler computations to be carried out in sequence.
  - Can be split into stages with buffers in between, and run in a pipeline.
- Useful when several similar calculations are required to be carried out in sequence.
  - Example: Vector operations.

```
for (i=0;i<64;i++)
    A[i] = B[i] * C[i];
```

Fixed Point Addition Pipeline

- We have seen how a ripple-carry adder works.
  - Rippling of the carries gives it a bad worst-case performance.
- We explore whether pipelining can improve the performance.
- *Assumption*: delay of a latch is comparable to the delay of a full adder.

A 4-bit Ripple Carry Adder

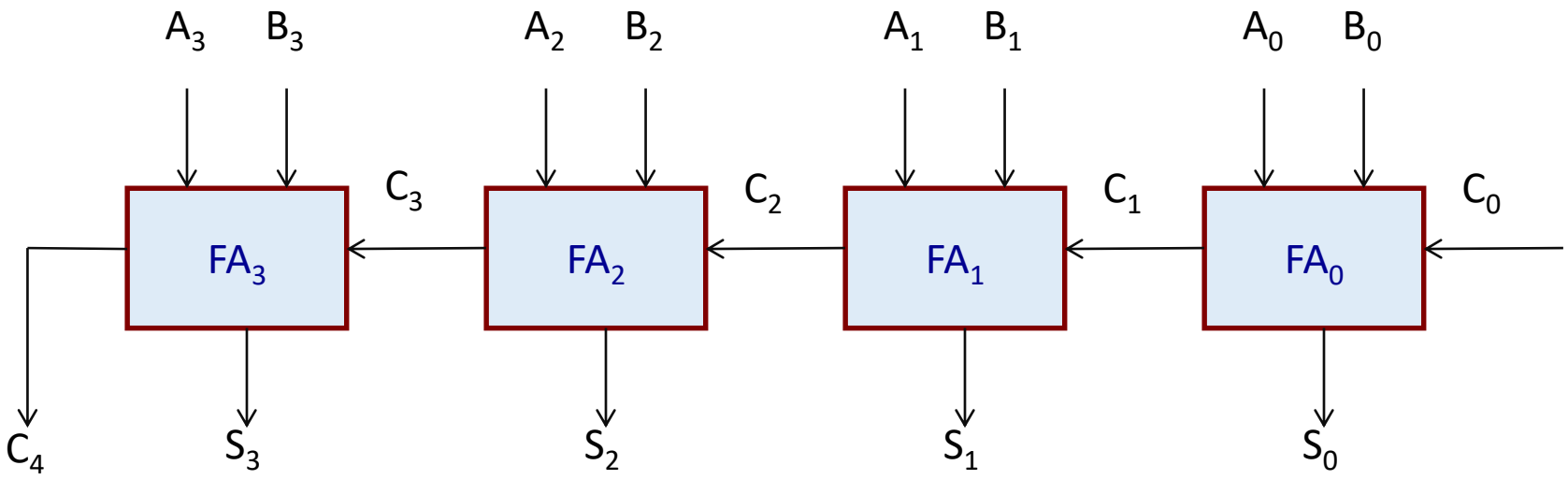

Worst-case delay ≈ 4 x (carry generation time in FA)

4-bit pipelined ripple-carry adder

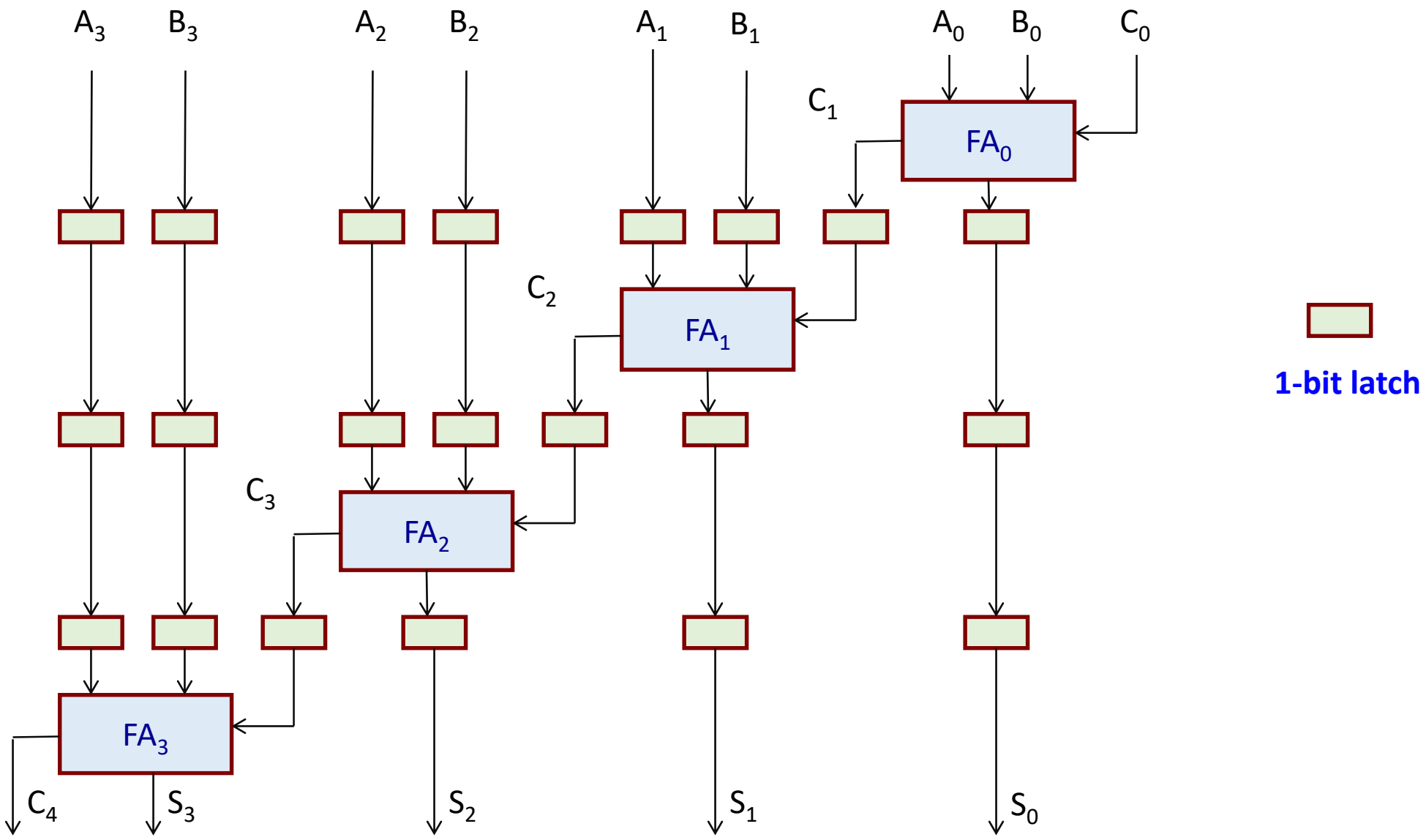

- Delay of a full adder = t_{FA}
- Delay of a 1-bit latch = t_L
- Clock period $T \geq (t_{FA} + t_L)$
- After the pipeline is full, one result (sum) is generated every time T.
  - Convenient for vector addition kind of applications.

```
for (i=0; i<10000; i++)
    a[i] = b[i] + c[i];
```

Floating-Point Addition

- Floating-point addition requires the following steps:
  a) Compare exponents and align mantissas.
  b) Add mantissas.
  c) Normalize result.
  d) Adjust exponent.
- Subtraction is similar.

Example:
$A = 0.9504 \times 10^3$
$B = 0.8200 \times 10^2$

Align mantissa: 0.0820
Add mantissa: 0.9504 + 0.0820 = 1.0324
Normalize: 0.10324
Adjust exponent: 3 + 1 = 4
Sum = 0.10324×10^4

Floating-Point Addition Hardware

- The last step of rounding is required in IEEE-754 format.

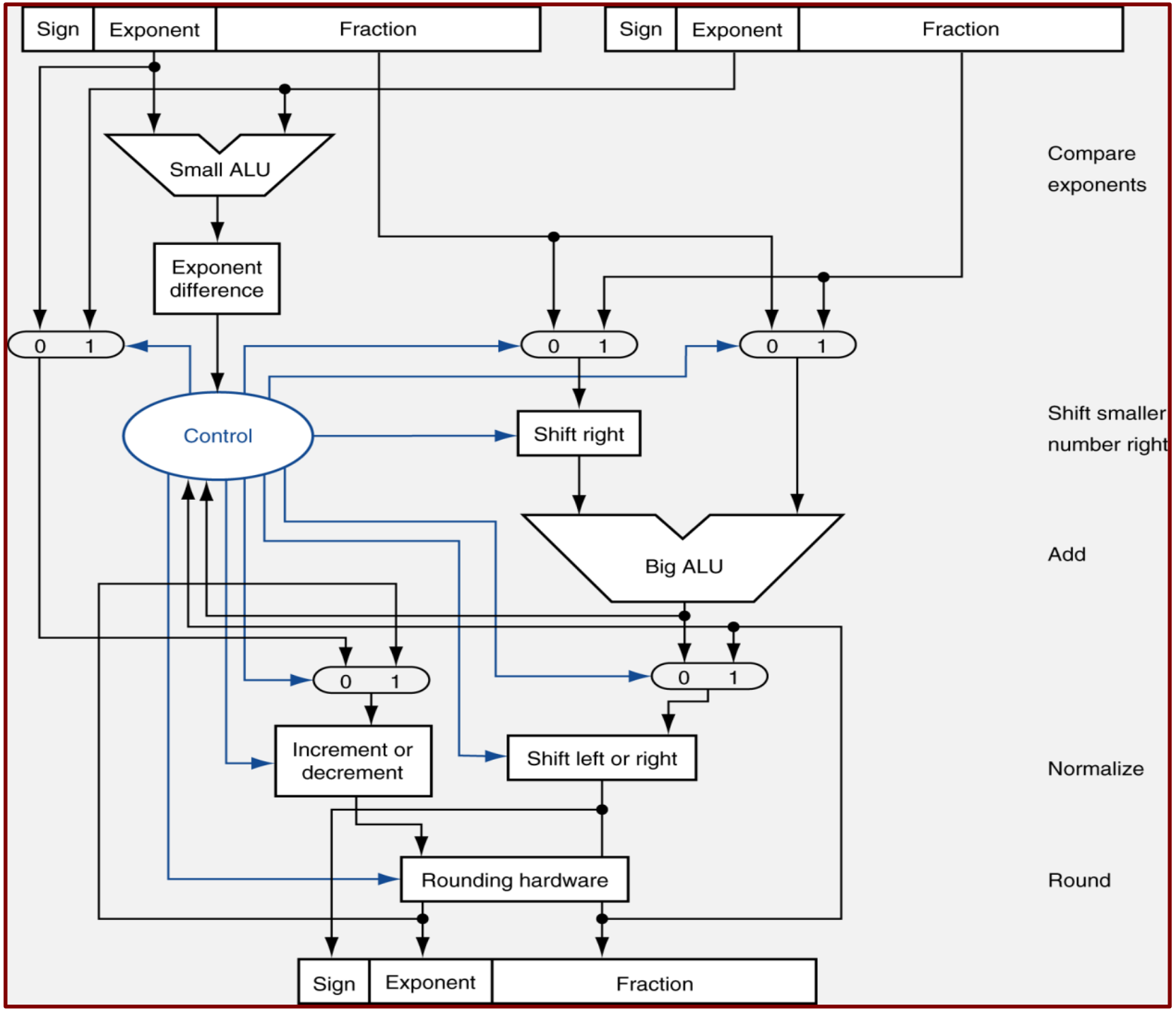

4-Stage Floating Point Adder

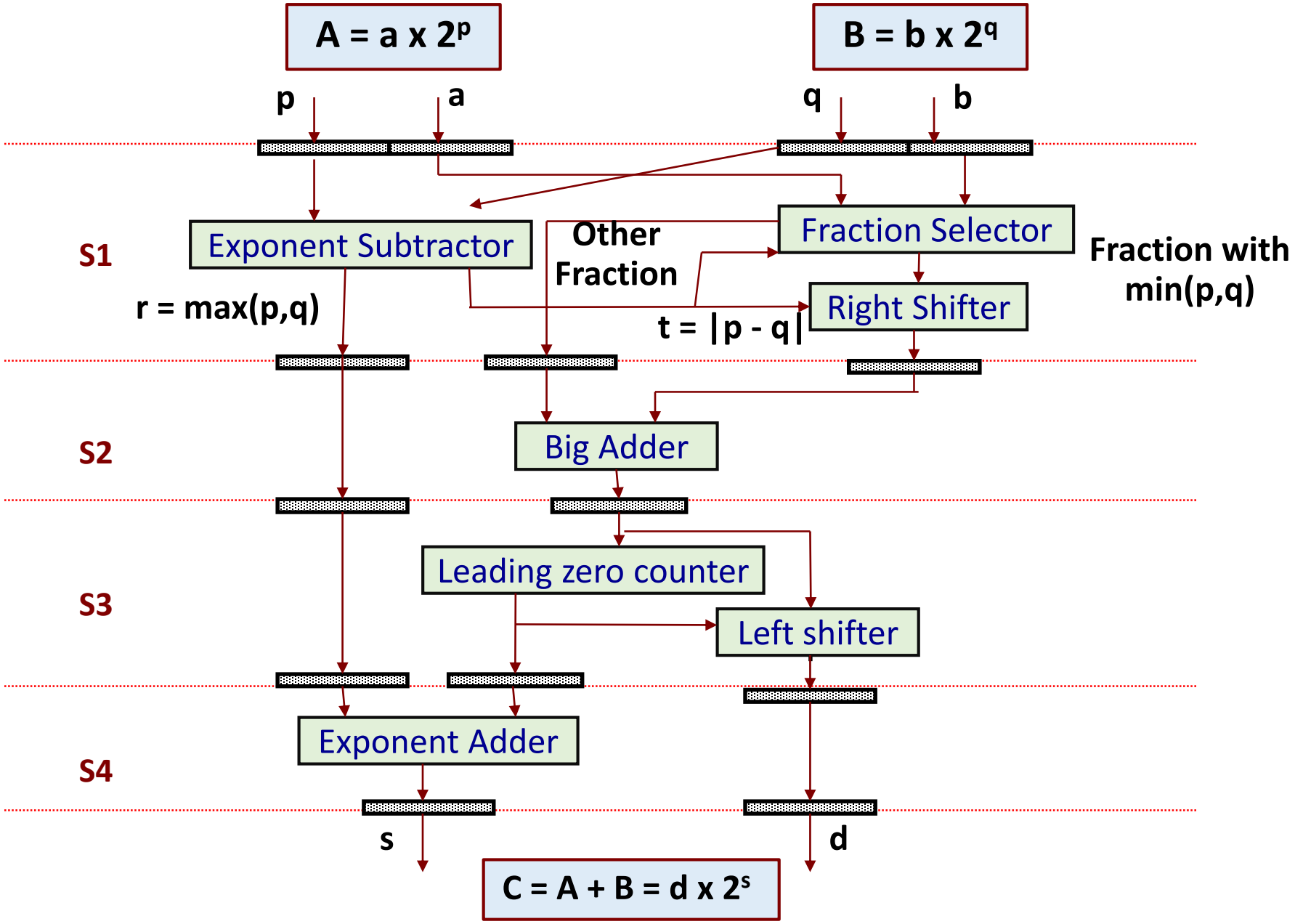

Floating-Point Multiplication

- Floating-point multiplication requires the following steps:
  a) Add exponents.
  b) Multiply mantissas.
  c) Normalize result.
- Division is similar.

A last step of rounding is required in IEEE-754 format.

Example:
$A = 0.9504 \times 10^3$
$B = 0.8200 \times 10^2$

Add exponents: $3 + 2 = 5$
Multiply mantissa: $0.9504 \times 0.8200 = 0.7793$
Normalize: 0.7793 (no change)
Product $= 0.7793 \times 10^5$

Pipelining the MIPS32 Data Path

Introduction

- Basic requirements for pipelining the MIPS32 data path:
  - We should be able to start a new instruction every clock cycle.
  - Each of the five steps mentioned before (IF, ID, EX, MEM and WB) becomes a pipeline stage.
  - Each stage must finish its execution within one clock cycle.
- Since execution of several instructions are overlapped, we must ensure that there is no conflict during the execution.
  - Simplicity of the MIPS32 instruction set makes this evaluation quite easy.
  - We shall discuss these issues in some detail.

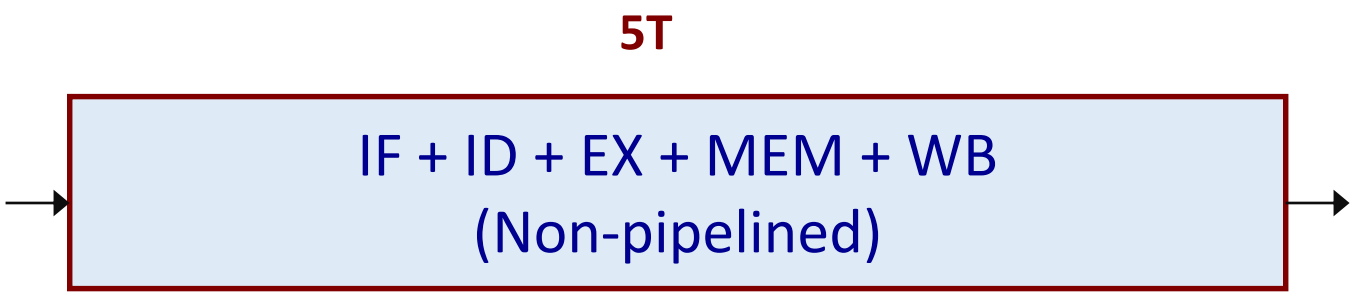

Time of execute n instructions = *5Tn*

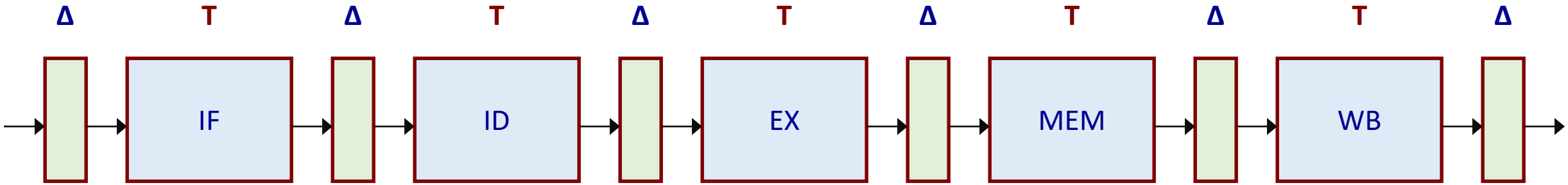

Time of execute *n* instructions = (4 + n).(T + Δ) ≈ (4 + n).T, if T >> Δ

Ideal Speedup = 5Tn / (4 + n)T ≈ 5, for large n.

In practice, due to various conflicts, speedup is much less.

Clock Cycles

Instruction	1	2	3	4	5	6	7	8
i	IF	ID	EX	MEM	WB			
i + 1		IF	ID	EX	MEM	WB		
i + 2			IF	ID	EX	MEM	WB	
i + 3				IF	ID	EX	MEM	WB

Instr-i finishes

Instr-(i+1) finishes

Instr-(i+2) finishes

Instr-(i+3) finishes

Clock Cycles

Instruction	1	2	3	4	5	6	7	8
i	IF	ID	EX	MEM	WB			
i + 1		IF	ID	EX	MEM	WB		
i + 2			IF	ID	EX	MEM	WB	
i + 3				IF	ID	EX	MEM	WB

Some examples of conflict:

- IF & MEM: In clock cycle 4, both instructions *i* and *i+3* access memory.
  - *Solution: use separate instructions and data cache*.
- ID & WB: In clock cycle 5, both instructions *i* and *i+3* access register bank.
  - *Solution: allow both read and write access to registers in the same clock cycle*.

Advantages of Pipelining

- In the non-pipelined version, the execution time of an instruction is equal to the combined delay of the five stages (say, *5T*).
- In the pipelined version, once the pipeline is full, one instruction gets executed after every *T* time.
  - Assuming all state delays are equal (equal to *T*), and neglecting latch delay.
- However, due to various conflicts between instructions (called *hazards*), we cannot achieve the ideal performance.
  - Several techniques have been proposed to improve the performance.
  - To be discussed.

Some Observations

a) To support overlapped execution, peak memory bandwidth must be increased *5 times* over that required for the non-pipelined version.

- An instruction fetch occurs every clock cycle.
- Also there can be two memory accesses per clock cycle (one for instruction and one for data).
- Separate instruction and data caches are typically used to support this.

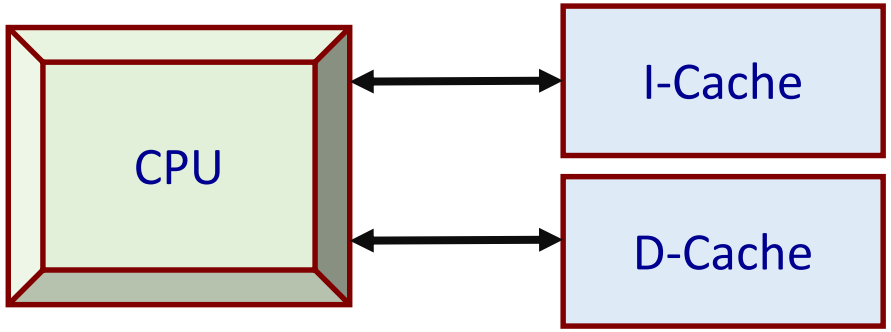

b) The register bank is accessed both in the stages ID and WB.

- ID requires 2 register reads, and WB requires 1 register write.
- We thus have the requirement of *2 reads and 1 write* in every clock cycle.
- Two register reads can be supported by having two register read ports.
- Simultaneous reads and write may result in clashes (e.g., same register used).
  - Solution adopted in MIPS32 pipeline is to perform the write during the *first half* of the clock cycle, and the reads during the *second half* of the clock cycle.

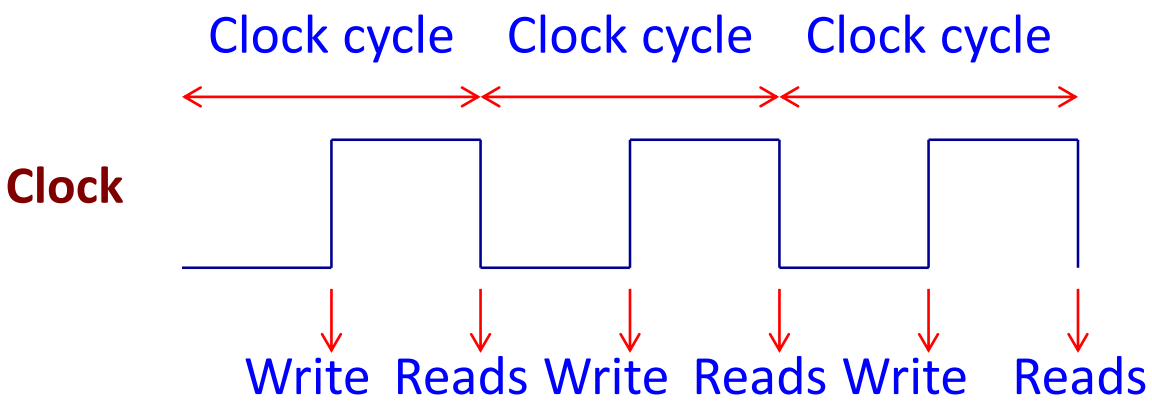

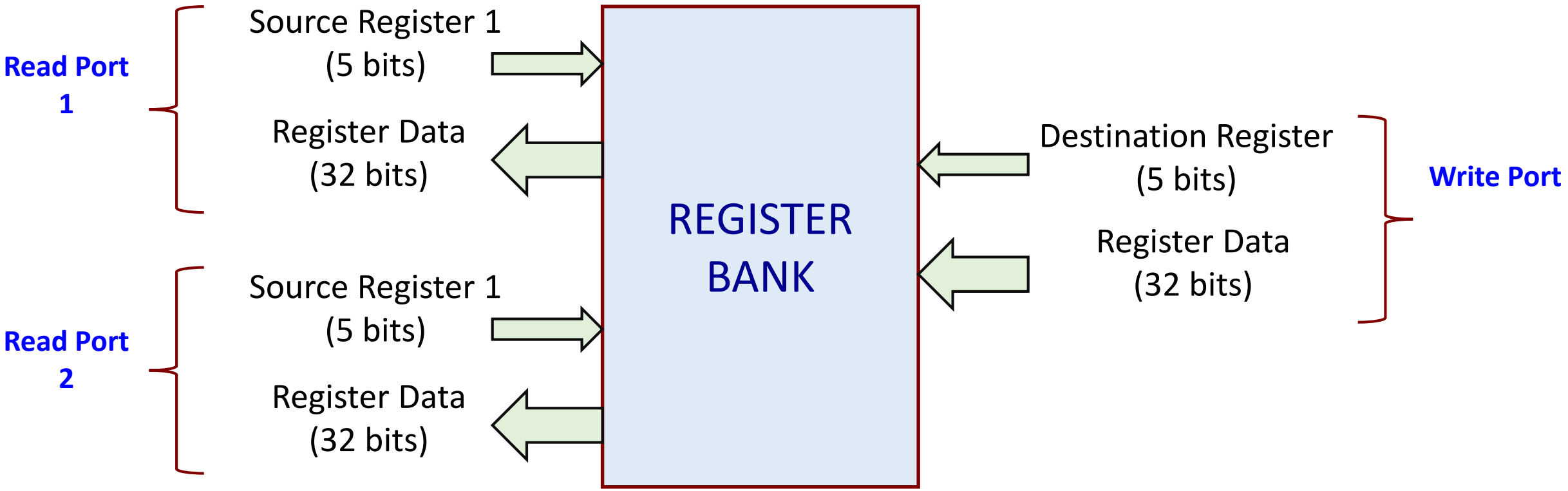
Read Port 1
Source Register 1 (5 bits)
Register Data (32 bits)
Read Port 2
Source Register 1 (5 bits)
Register Data (32 bits)
REGISTER BANK
Destination Register (5 bits)
Register Data (32 bits)
Write Port

c) Since a new instruction is fetched every clock cycle, it is required to increment the *PC* on each clock.

- PC updating has to be done *during IF stage itself*, as otherwise the next instruction cannot be fetched.
- In the non-pipelined version discussed earlier, this was done during the MEM stage.

Basic Performance Issues in a Pipeline

- Register stages are inserted between pipeline stages, which increases the execution time of an individual instruction.
  - Because of overlapped execution of instructions, throughput increases.
- The clock period *T* has to be chosen suitably:
  - Slowest stage in the pipeline.
  - Clock skew and jitter.
  - Register setup time: minimum time the register input must be held stable before the active clock edge arrives.

Example 1

- Consider the 5-stage MIPS32 pipeline, with the following features:
  - Pipeline clock rate of 1GHz (i.e. 1 ns clock cycle time).
  - For a non-pipelined implementation, ALU operations and branches take 4 cycles, while memory operations take 5 cycles.
  - Relative frequencies of ALU operations, branches and memory operations are 50%, 15%, and 35% respectively.
  - In the pipelined implementation, due to clock skew and setup time, the clock cycle time increases by 0.25 ns.
  - Calculate the estimated speedup of the pipelined implementation.

- **Solution:**

a) For non-pipelined processor:

- Average instruction execution time = Clock cycle time x Average CPI

  = 1 ns x (0.50 x 4 + 0.15 x 4 + 0.35 x 5) = 4.35 ns

b) For pipelined processor:

- Clock cycle time = 1 + 0.25 = 1.25 ns
- In the steady state, one instruction will get executed every clock cycle.
- Speedup = 4.35 / 1.25 = 3.48

Micro-operations for Non-pipelined MIPS32

IF

IR ← Mem [PC];

NPC ← PC + 4;

ID

A ← Reg [rs];

B ← Reg [rt];

Imm ← $(IR_{15})^{16}$ ## $IR_{15..0}$

Imm1 ← $IR_{25..0}$ ## 00

EX

ALUOut ← A + Imm;

(a) Memory

ALUOut ← A func B;

(b) R-R ALU

ALUOut ← A func Imm;

(c) R-IMM ALU

ALUOut ← NPC + (Imm << 2);

cond ← (A op 0);

(d) Branch

MEM

PC ← NPC;

LMD ← Mem [ALUOut];

(a) Load

PC ← NPC;

Mem [ALUOut] ← B;

(b) Store

if (cond) PC ← ALUOut;

else PC ← NPC;

(c) Branch

PC ← NPC;

(d) Others

WB

Reg [rd] ← ALUOut;

(a) R-R ALU

Reg [rt] ← ALUOut;

(b) R-IMM ALU

Reg [rt] ← LMD;

(c) Load

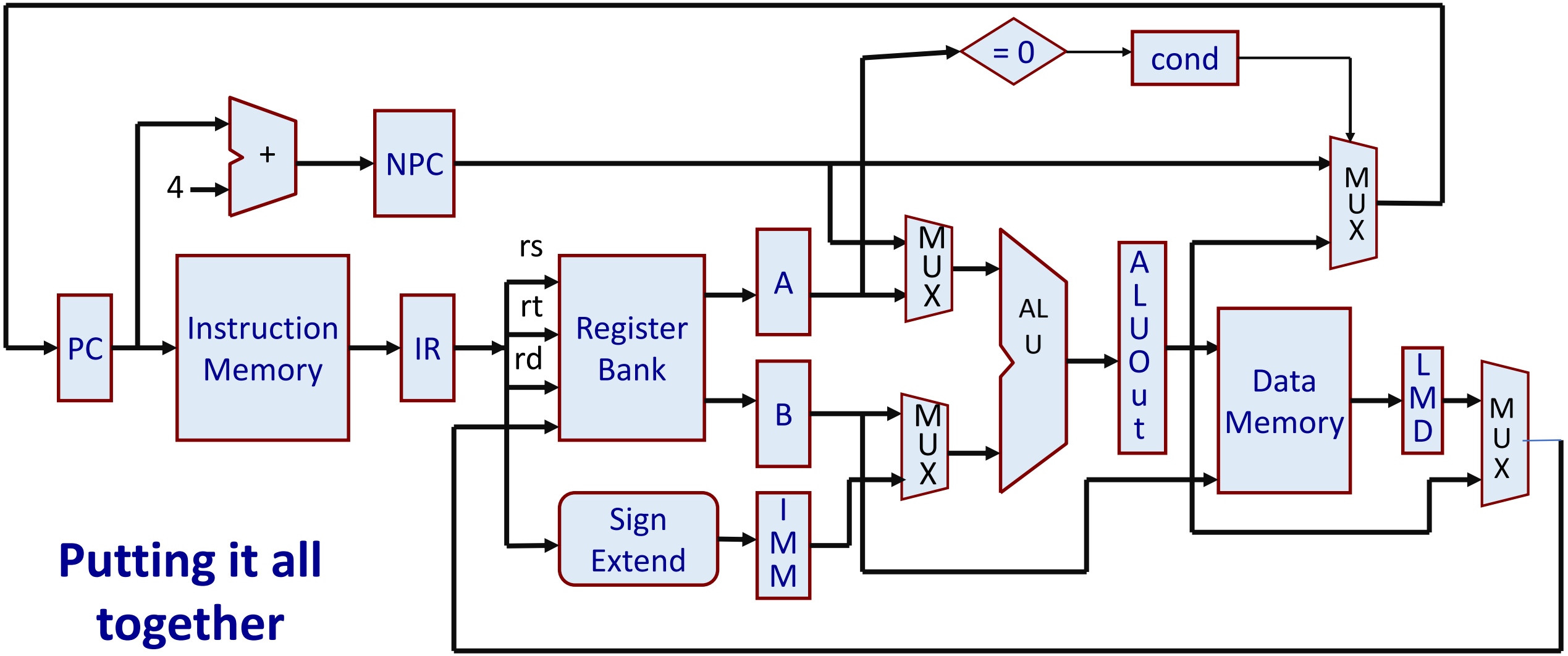

Putting it all together

Micro-operations for Pipelined MIPS32

- Convention used:
  - Many of the temporary registers required in the data path are included as part of the inter-stage latches.
  - IF/ID: denotes the latch stage between the IF and ID stages.
  - ID/EX: denotes the latch stage between the ID and EX stages.
  - EX/MEM: denotes the latch stage between the EX and MEM stages.
  - MEM/WB: denotes the latch stage between the MEM and WB stages.
- **Example**:
  - ID/EX.A means a register *A* that is implemented as part of the *ID/EX latch* stage.

(a) Micro-operations for Pipeline Stage IF

```
IF/ID.IR          ←  Mem [PC];
IF/ID.NPC,PC  ←  ( if ((EX/MEM.opcode == branch) & EX/MEM.cond)
                        { EX/MEM.ALUOut}
                     else  {PC + 4} );
```

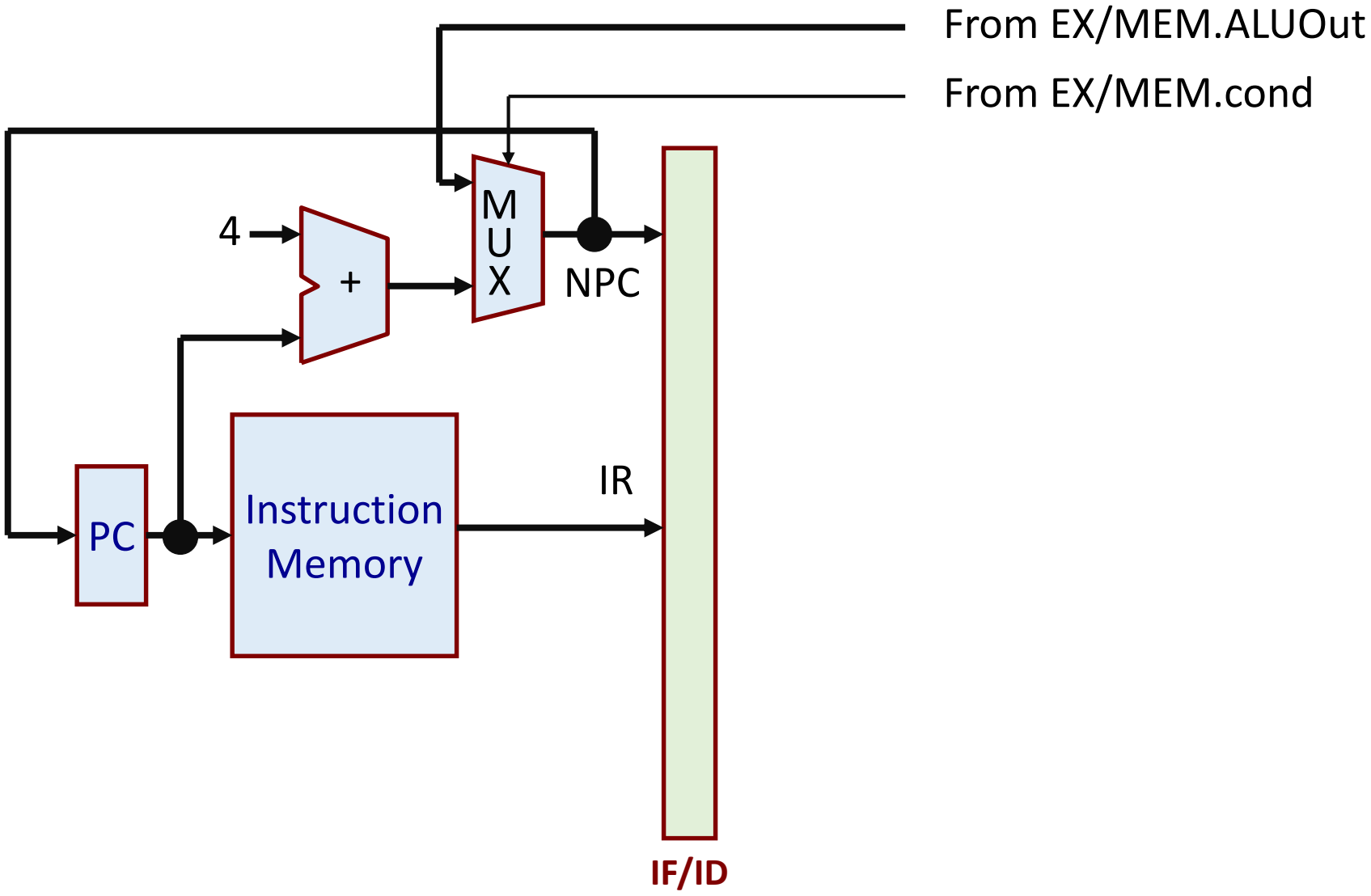
From EX/MEM.ALUOut
From EX/MEM.cond
4
+
M
U
X
NPC
PC
Instruction
Memory
IR
IF/ID

(b) Micro-operations for Pipeline Stage ID

ID/EX.A ← Reg [IF/ID.IR [rs]];

ID/EX.B ← Reg [IF/ID.IR [rt]];

ID/EX.NPC ← IF/ID.NPC;

ID/EX.IR ← IF/ID.IR;

ID/EX.Imm ← sign-extend ($IF/ID.IR_{15..0}$);

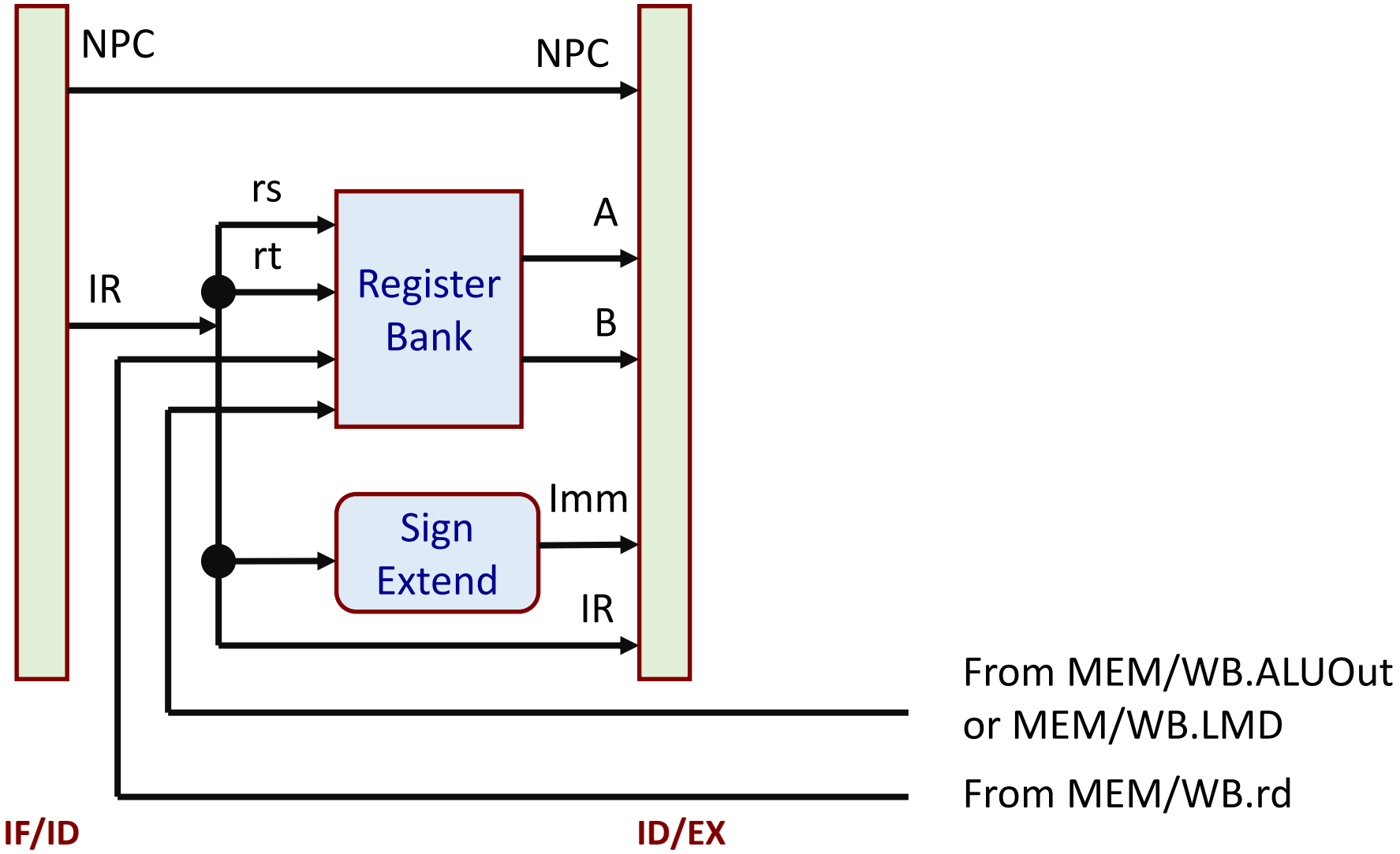
NPC
NPC
rs
rt
IR
Register Bank
A
B
Sign Extend
Imm
IR
From MEM/WB.ALUOut or MEM/WB.LMD
From MEM/WB.rd
IF/ID
ID/EX

(c) Micro-operations for Pipeline Stage EX

EX/MEM.IR ← ID/EX.IR;

EX/MEM.ALUOut ← ID/EX.A func ID/EX.B;

R-R ALU

EX/MEM.ALUOut ← ID/EX.NPC +

(ID.EX.Imm << 2);

EX/MEM.cond ← (ID/EX.A == 0);

BRANCH

EX/MEM.IR ← ID/EX.IR;

EX/MEM.ALUOut ← ID/EX.A func ID/EX.Imm;

R-M ALU

EX/MEM.IR ← ID/EX.IR;

EX/MEM.ALUOut ← ID/EX.A + ID/EX.B;

EX/MEM.B ← ID/EX.B;

LOAD / STORE

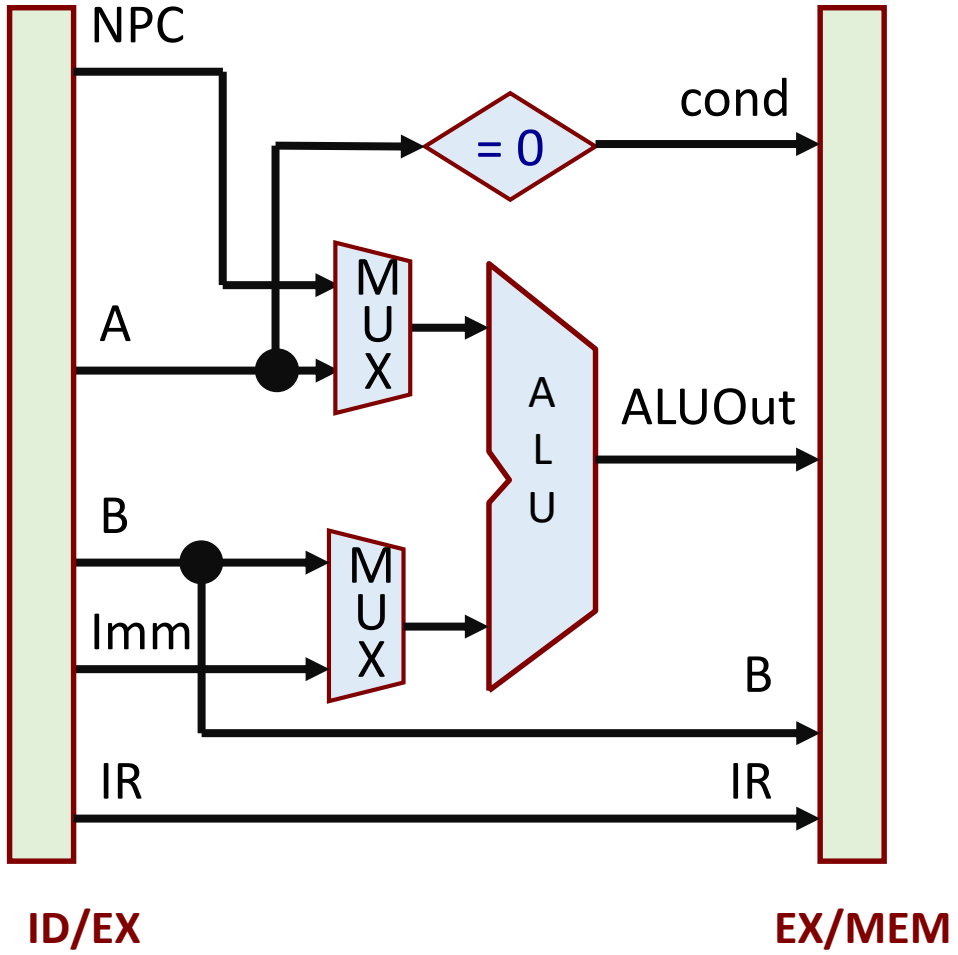
NPC
cond
= 0
A
M
U
X
A
L
U
ALUOut
B
M
U
X
Imm
B
IR
IR
ID/EX
EX/MEM

(d) Micro-operations for Pipeline Stage MEM

MEM/WB.IR ← EX/MEM.IR;
MEM/WB.ALUOut ← EX/MEM.ALUOut;

ALU

MEM/WB.IR ← EX/MEM.IR;
MEM/WB.LMD ← Mem [EX/MEM.ALUOut];

LOAD

MEM/WB.IR ← EX/MEM.IR;
Mem [EX/MEM.ALUOut] ← EX/MEM.B;

STORE

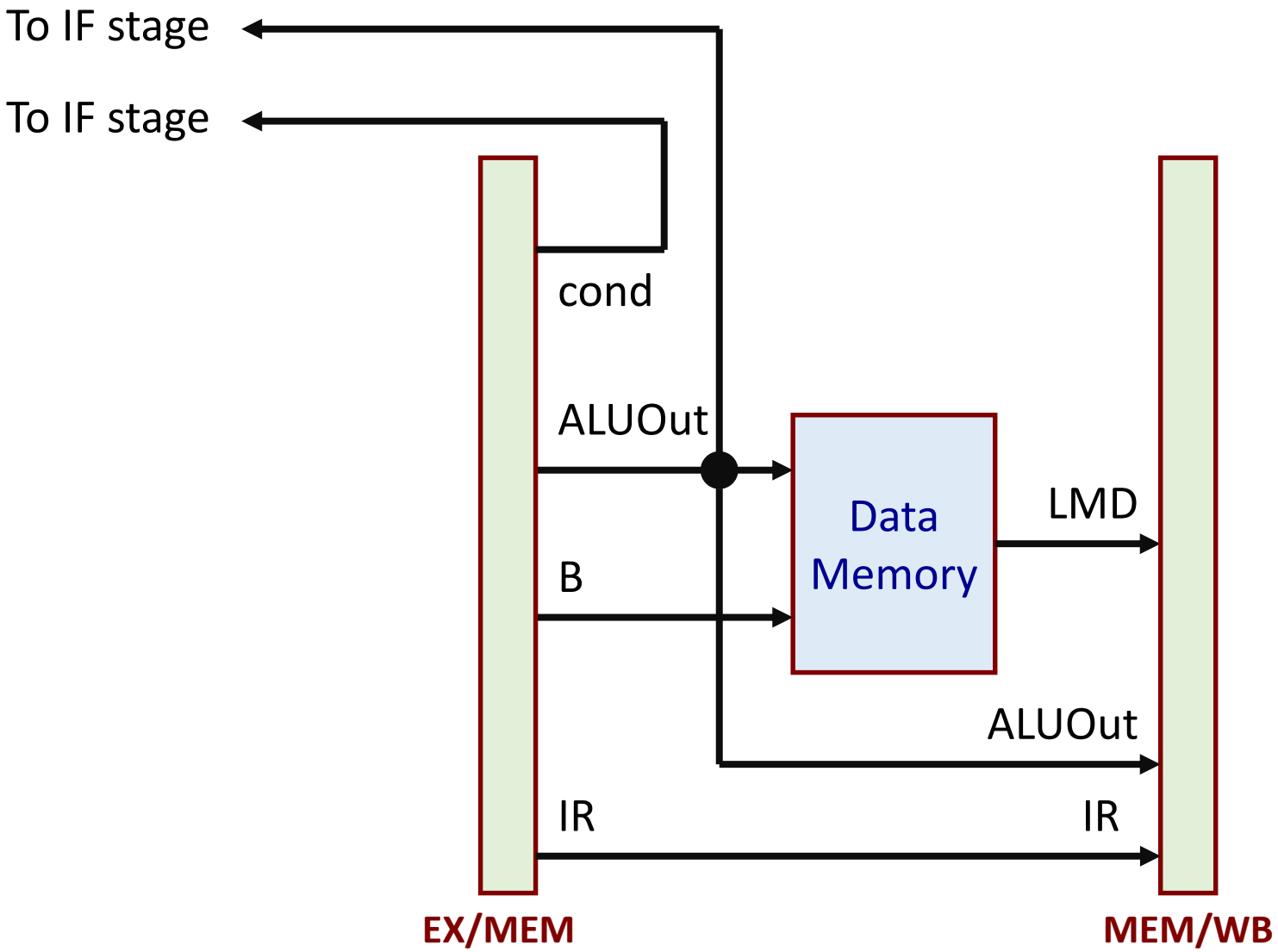
To IF stage
To IF stage
cond
ALUOut
B
Data Memory
LMD
ALUOut
IR
IR
EX/MEM
MEM/WB

(e) Micro-operations for Pipeline Stage WB

Reg [MEM/WB.IR [rd]] ← MEM/WB. ALUOut; **R-R ALU**

Reg [MEM/WB.IR [rt]] ← MEM/WB. ALUOut; **R-M ALU**

Reg [MEM/WB.IR [rt]] ← MEM/WB. LMD; **LOAD**

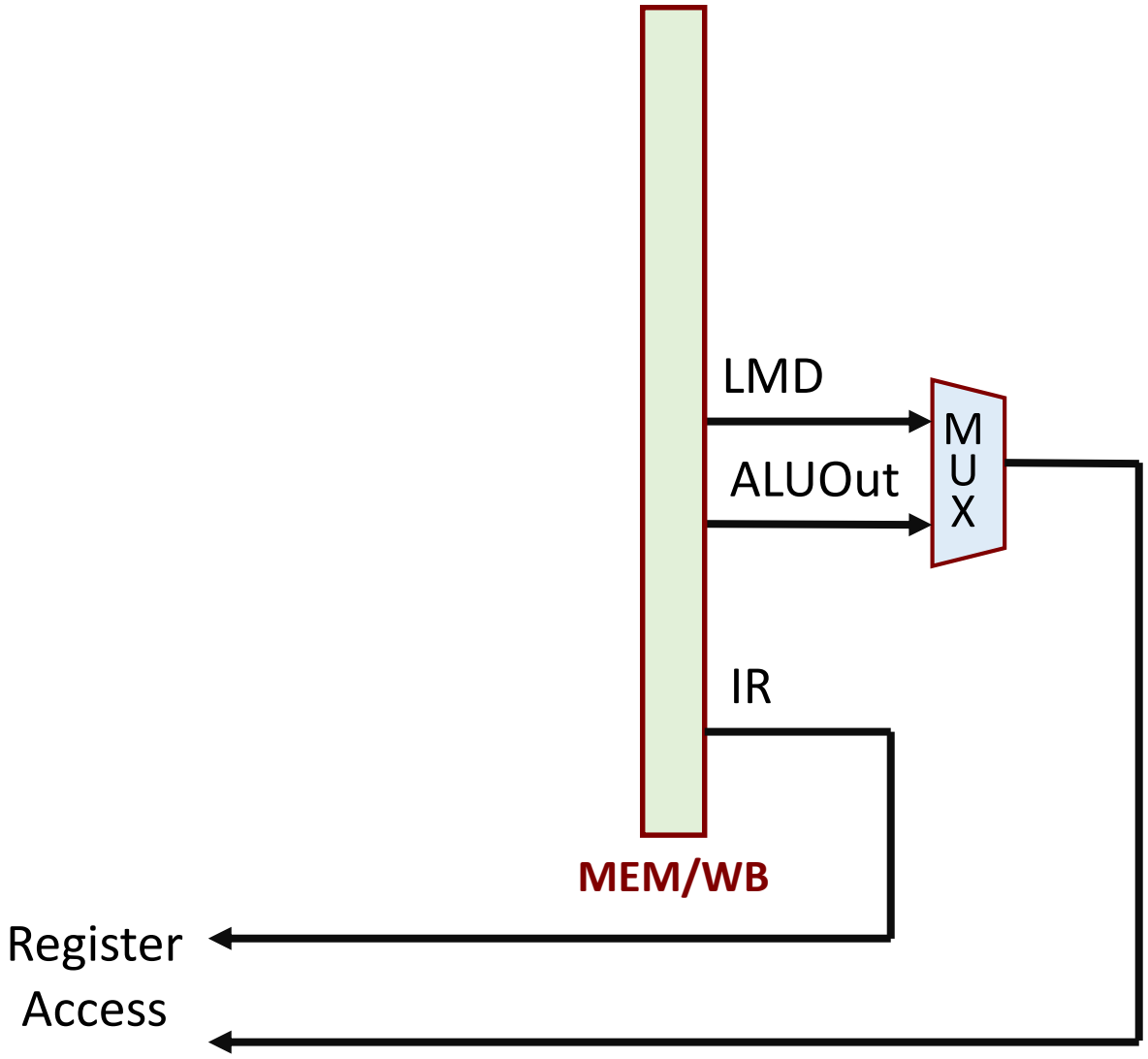
LMD
ALUOut
M
U
X
IR
MEM/WB
Register
Access

PUTTING IT ALL TOGETHER :: MIPS32 PIPELINE

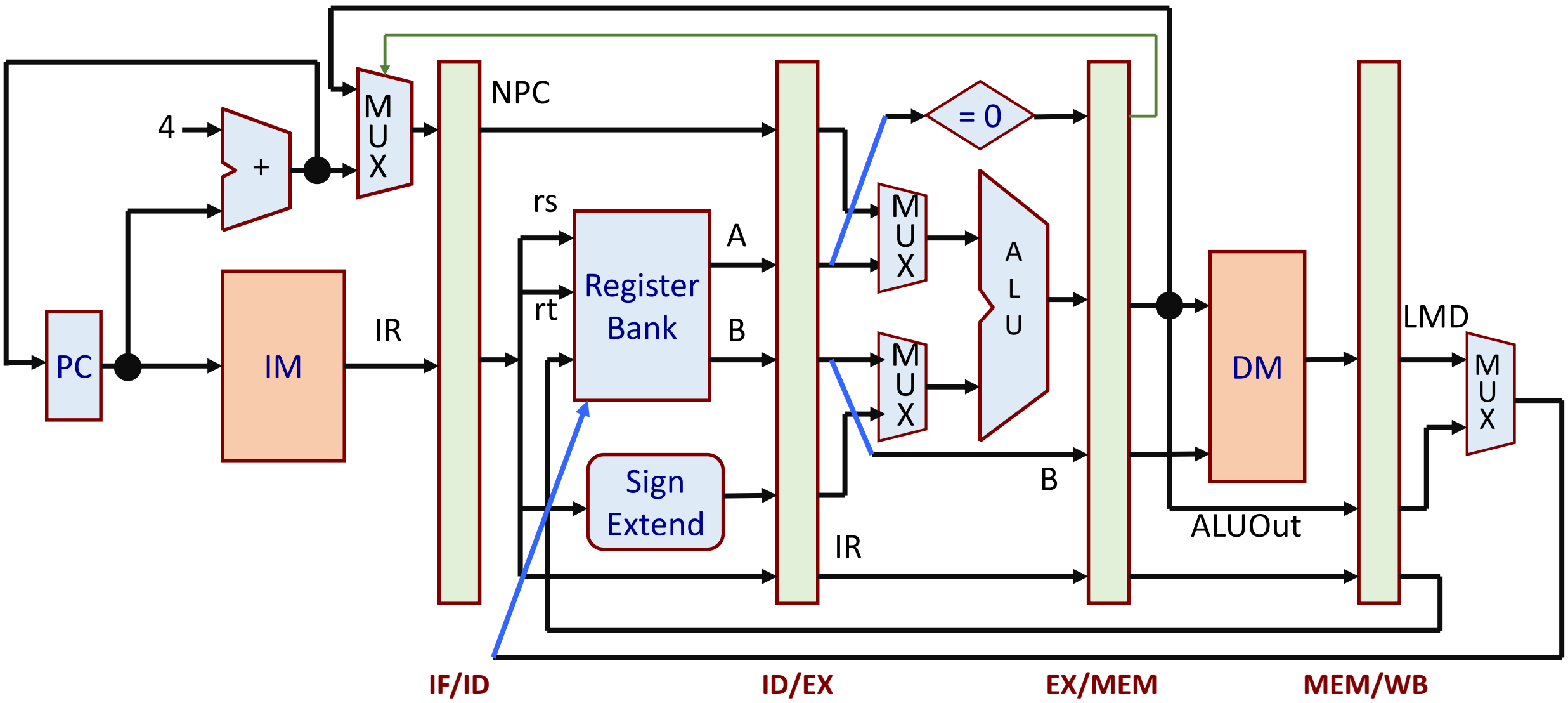
4
+
MUX
NPC
PC
IM
IR
rs
rt
Register Bank
A
B
Sign Extend
IR
= 0
MUX
MUX
ALU
B
DM
ALUOut
LMD
MUX
IF/ID
ID/EX
EX/MEM
MEM/WB