Computer Organization and Architecture

Prof. Indranil Sengupta

Dr. Sarani Bhattacharya

Department of Computer Science and Engineering

IIT Kharagpur

Design of Control Unit

Instructions

- Instructions are stored in main memory.
- Program Counter (PC) points to the next instruction.
  - MIPS instructions are 4 bytes (32 bits) long.
  - All instructions starts from an address that is multiple of 4 (last 2 bits 00).
  - Normally, PC is incremented by 4 to point to the next instruction.

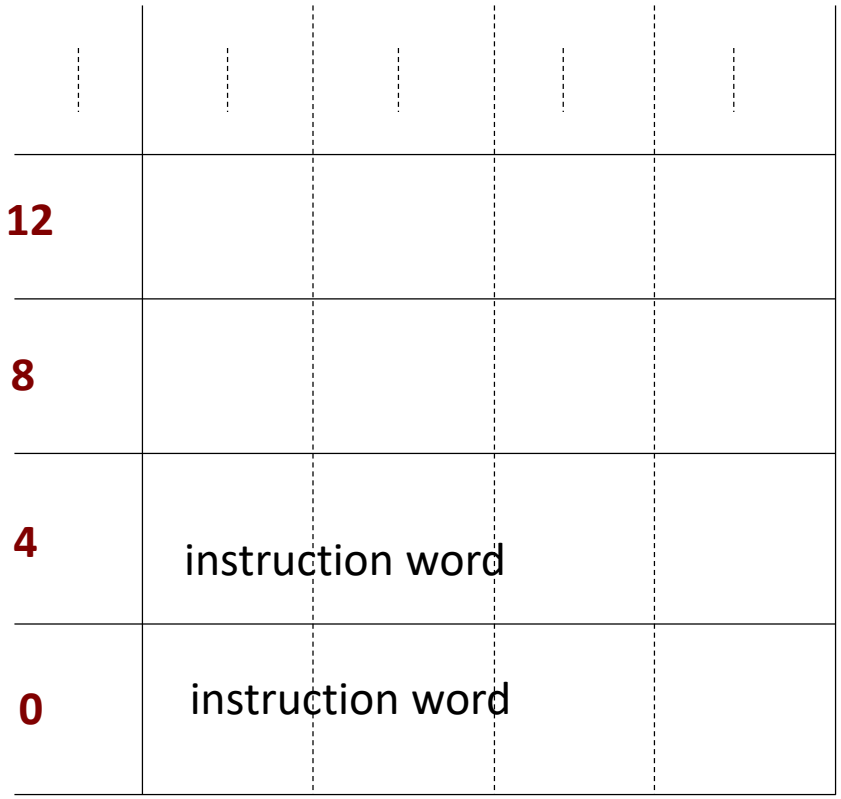

Addressing a Byte in Memory

- Each byte in memory has a unique address.
  - Memory is said to be *byte addressable*.
- Typically the instructions are of 4 bytes, hence the instruction memory is addressed in terms of 4 bytes (word length = 32 bits).
- When an instruction is executed, PC is incremented by 4 to point to the next instruction.

How an instruction Gets Executed?

```
repeat forever
      // till power off or
      // system failure
{
    Fetch instruction
    Decode instruction
    Execute instruction
}
```

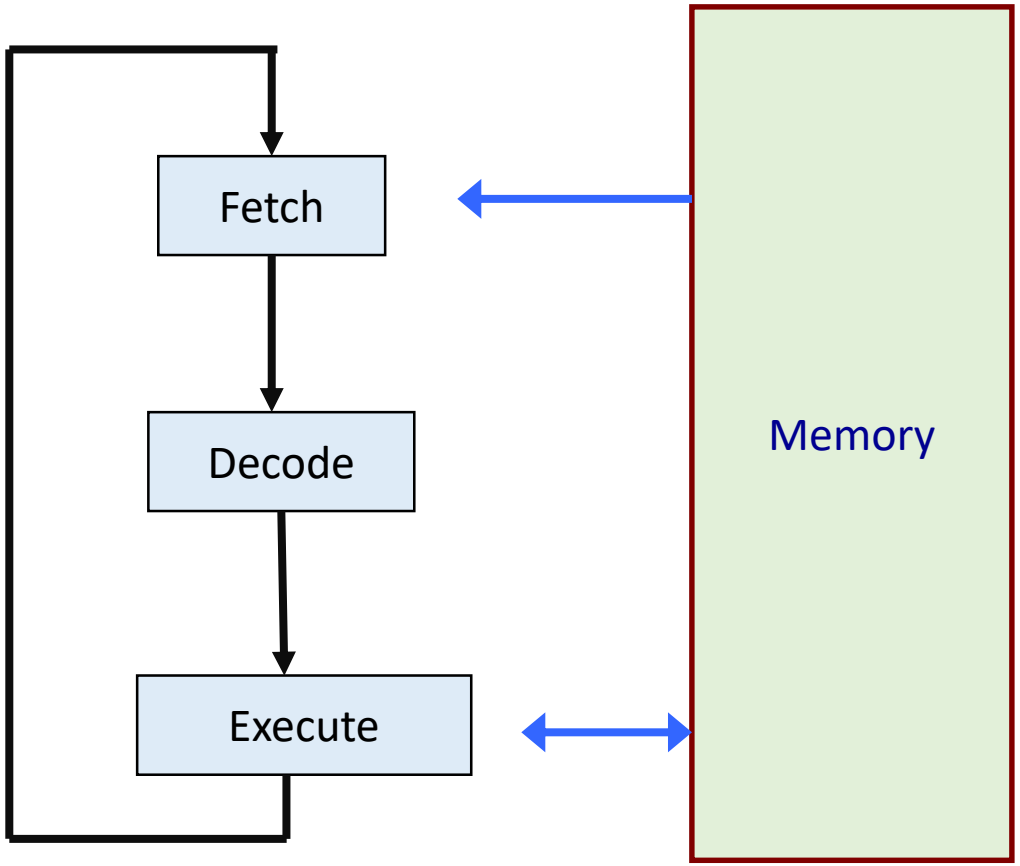

The Fetch-Execute Cycle

- Fetch the next instruction from memory.
- Decode the instruction.
- Execution Cycle:
  - Gets data from memory if needed (data not available in the processor)
  - Perform the required operation on the data.
  - May also store the result back in memory or register.

Registers: IR and PC

- **Program Counter (PC)** holds the address of the memory location containing the next instruction to be executed.
- **Instruction Register (IR)** contains the current instruction being executed.
- Basic processing cycle to be implemented:
  - Instruction Fetch (IF)

    $IR \leftarrow Mem[PC]$
  - Considering the word length of the machine is 32 bit, the PC is incremented by 4 to point to the next instruction.

    $PC \leftarrow PC + 4$
  - Carry out the operations specified in IR.

Example: Add R1, R2

Address	Instruction
1000	ADD R1, R2
1004	MUL R3, R4

a) PC = 1000

b) MAR = 1000

c) PC = PC + 4 = 1004

d) MDR = “ADD R1, R2”

e) IR = “ADD R1, R2”

(Decode and finally execute)

f) R1 = R1 + R2

Requirement for Instruction Execution

- The necessary registers must be present.
- The internal organization of the registers must be known.
- The data path must be known.
- For instruction execution, a number of micro-operations are carried out on the data path.
  - An instruction consists of several micro-operations or micro-instructions.
  - May involve movement of data.

Kinds of Data Movement

- Broadly three types:
  a) Register to Register
  b) Register to ALU
  c) ALU to Register
- Data movement is supported in the data path by:
  - The Registers
  - The Bus (single or multiple)
  - The ALU temporary Register (Z)

Single Bus Organization

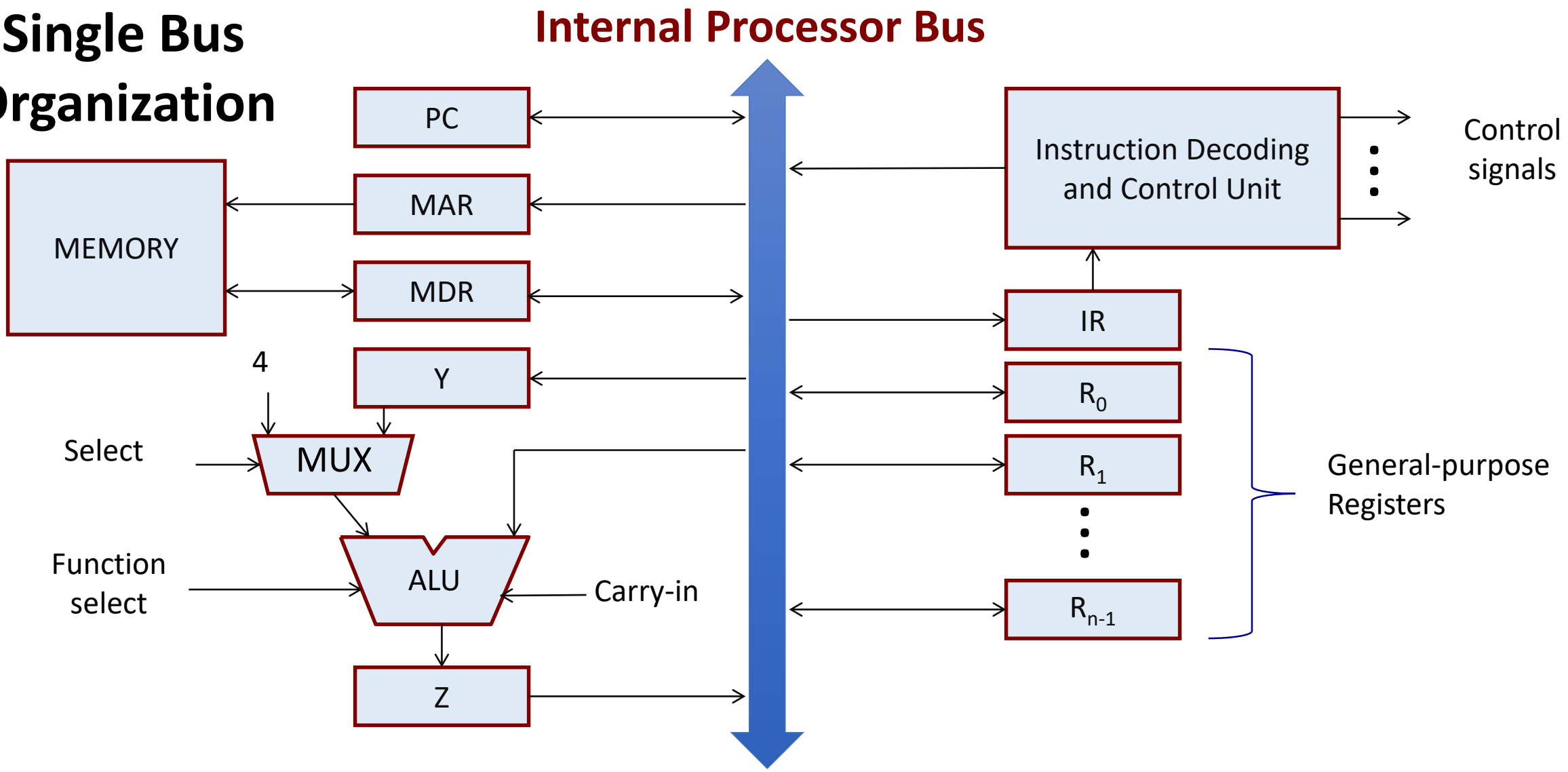

Single Internal Bus Organization

- All the registers and various units are connected using a single internal bus.
- Registers R_0-R_{n-1} are general-purpose registers used for various purposes.
- Y and Z are used for storing intermediate results and never used by instructions explicitly.
- The multiplexer selects either a constant 4 or output of register Y.
  - When PC is incremented, a constant 4 has to be added.

- The instruction decoder and control unit is responsible for performing the actions specified by the instruction loaded into IR.
- The decoder generates all the control signals in the proper sequence required to execute the instruction specified by the IR.
- The registers, the ALU and the interconnecting bus are collectively referred to as the *datapath*.

Kinds of Operations

- Transfer of data from one register to another.

  MOVE R1, R2

- Perform arithmetic or logic operation on data loaded into registers.

  ADD R1, R2

- Fetch the content of a memory location and load it into a register.

  MOVE R1, LOCA

- Store a word of data from a register into a given memory location.

  MOVE LOCA, R1

Three Bus Organization

- A typical 3-bus architecture for the processor datapath is shown in the next slide.
  - The 3-bus organization is internal to the CPU.
  - Three buses allow three parallel data transfer operations to be carried out.
- Less number of cycles required to execute an instruction compared to single bus organization.

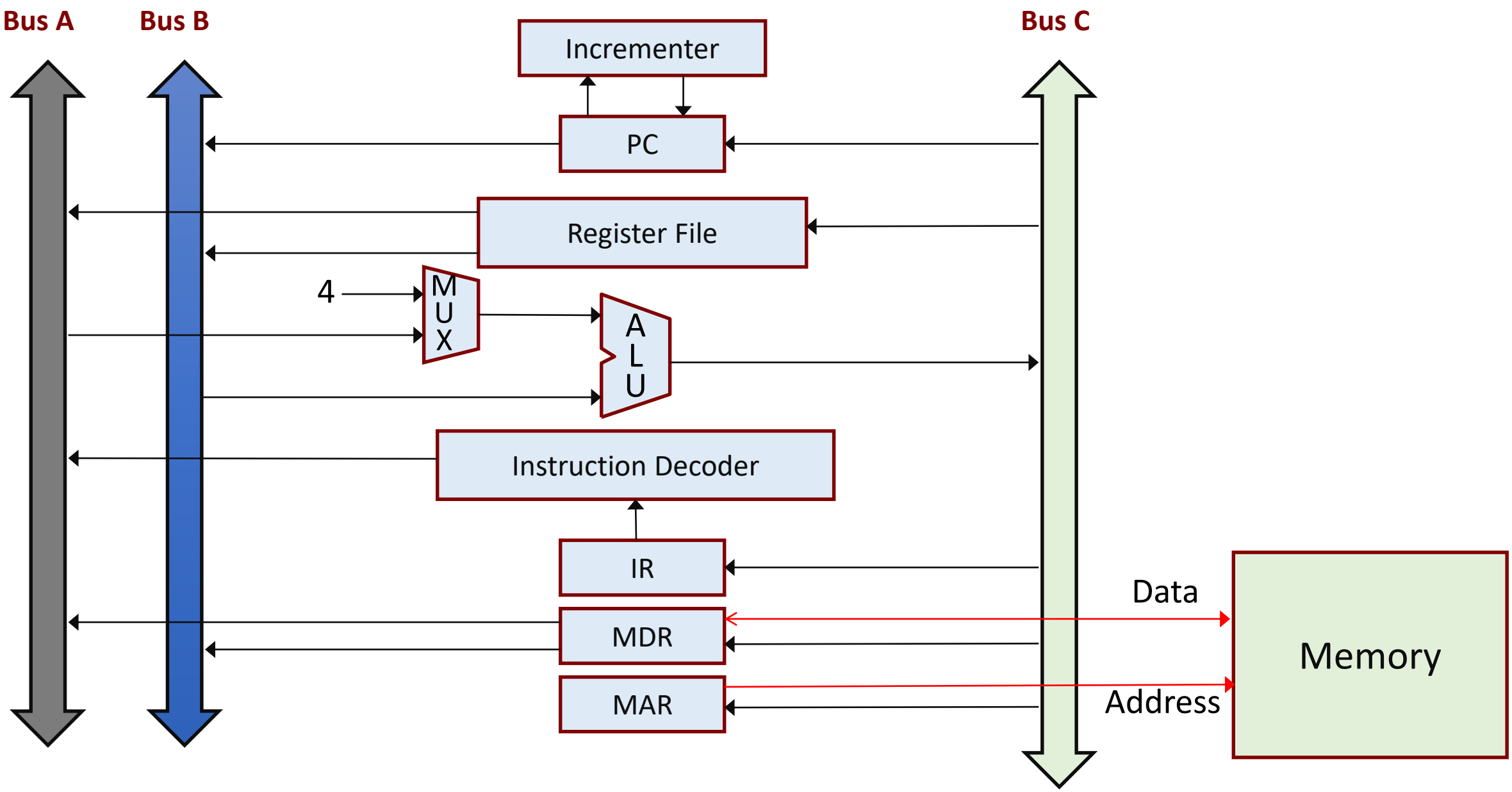
Bus A
Bus B
Bus C
Incrementer
PC
Register File
4
MUX
ALU
Instruction Decoder
IR
MDR
MAR
Data
Address
Memory

Organization of a Register

- A register is used for temporary storage of data (parallel-in, parallel-out, etc.).
- A register Ri typically has two control signals.
  - Ri_{in} : used to load the register with data from the bus.
  - Ri_{out} : used to place the data stored in the register on the bus.
- Input and output lines of the register Ri are connected to the bus via controlled switches.

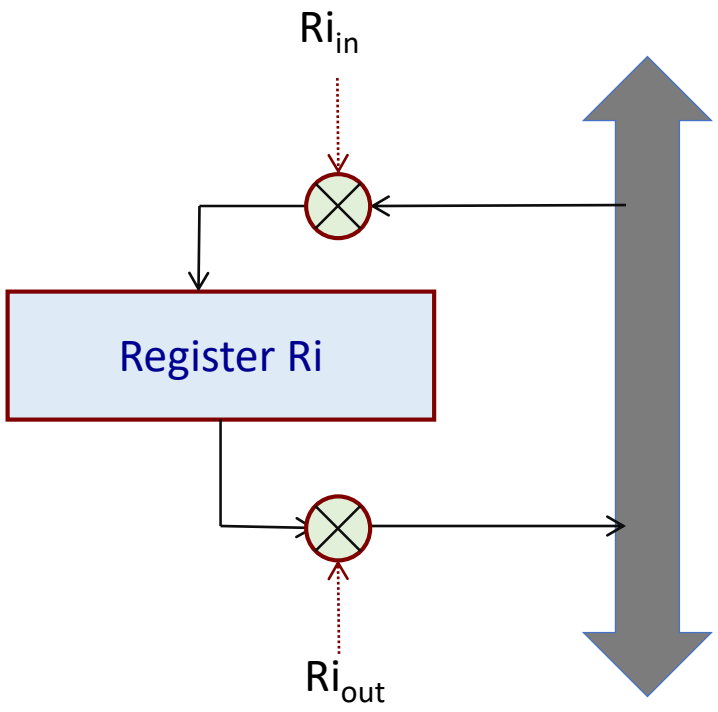

- When (Ri_{in} = 1), the data available on bus is loaded into Ri.

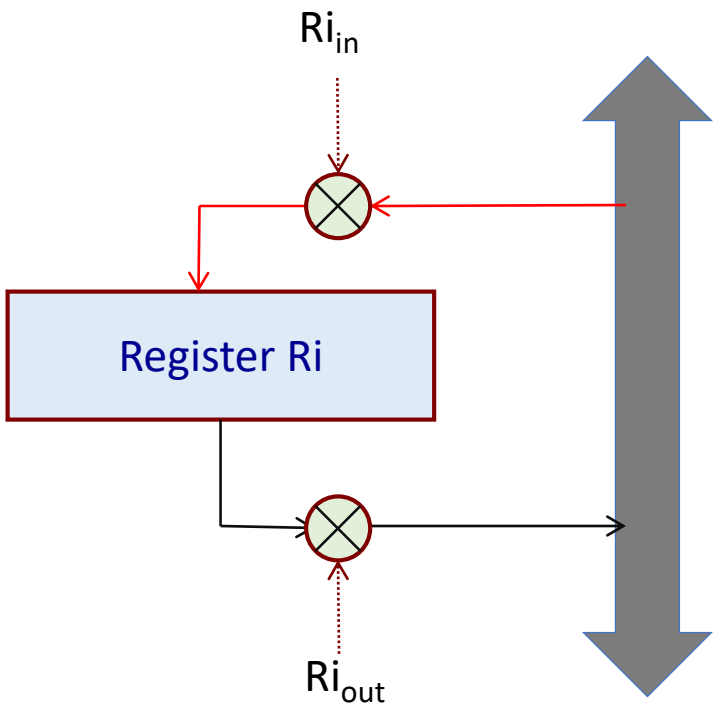

- When (Ri_{out} = 1), the data from register Ri are placed on the bus.

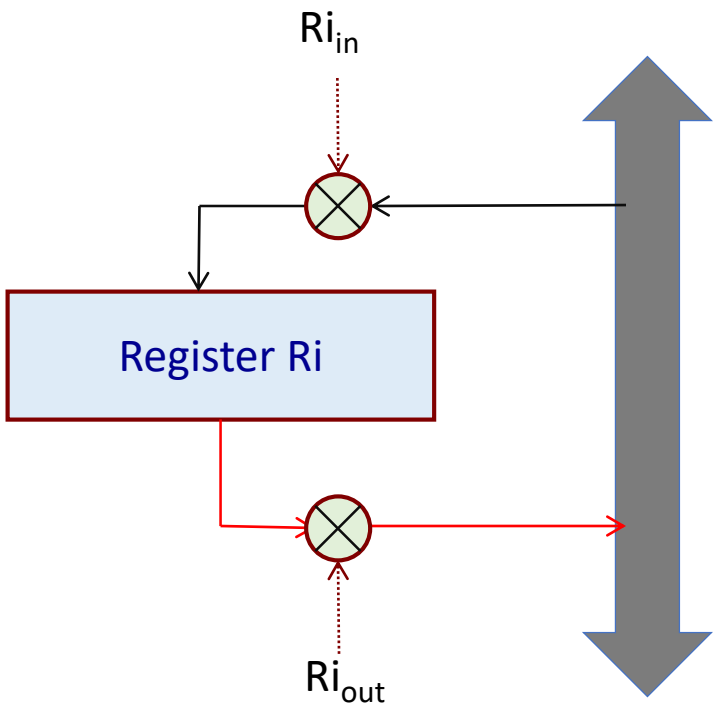

Register Transfer

MOVE R1, R2 // R1 ← R2

- Enable the output of R2 by setting $R2_{out} = 1$.
- Enable the input of register R1 by setting $R1_{in} = 1$.
- All operations are performed in synchronism with the processor clock.
  - The control signals are asserted at the start of the clock cycle.
  - After data transfer the control signals will return to 0.
- We write as *T1: $R2_{out}$, $R1_{in}$*

Time Step **Control Signals**

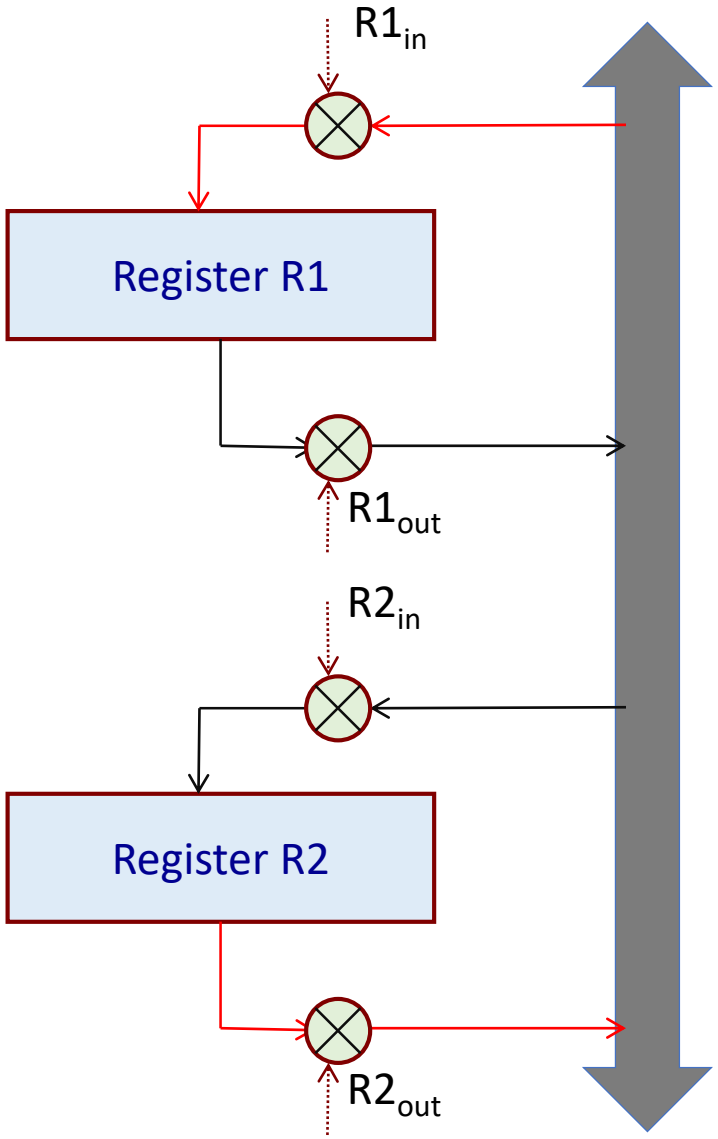

ALU Operation

ADD R1, R2 // R1=R1 + R2

- Bring the two operands (R1 and R2) to the two inputs of the ALU.

  One through Y (R1) and another (R2) directly from internal bus.

- Result is stored in Z and finally transferred to R1.

  T1: $R1_{out}$, Y_{in}

  T2: $R2_{out}$, SelectY, ADD, Z_{in}

  T3: Z_{out}, $R1_{in}$

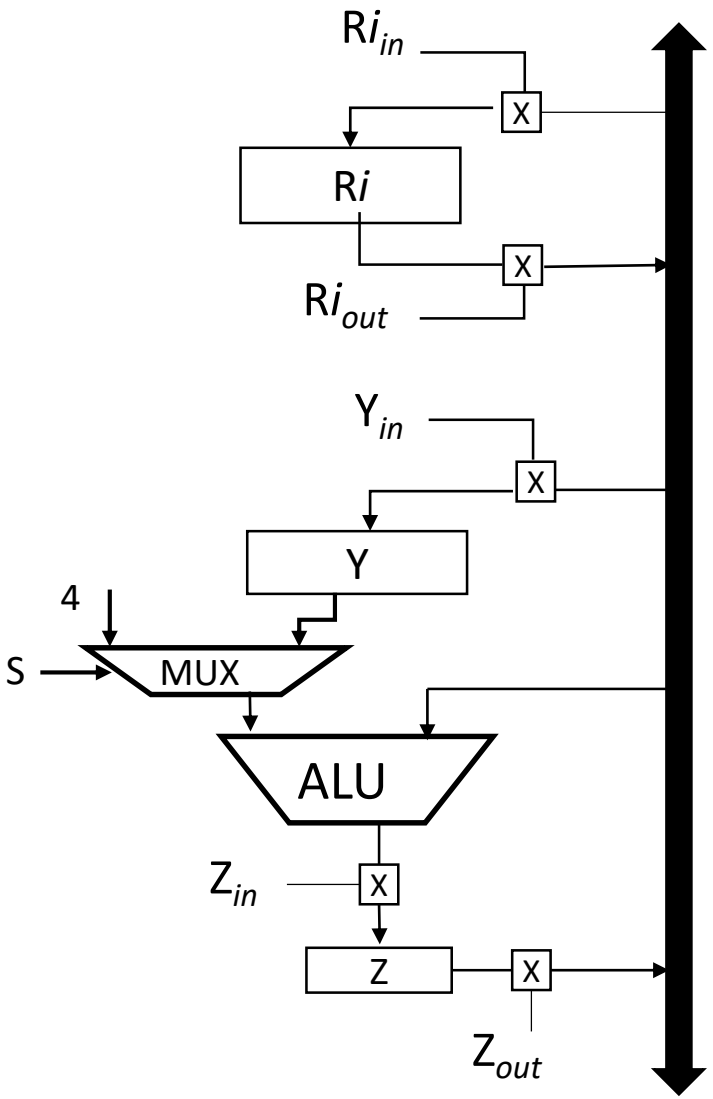

Fetching a Word from Memory

- The steps involved to fetch a word from memory:
  - The processor specifies the address of the memory location where the data or instruction is stored.
  - The processor requests a read operation.
  - The information to be fetched can either be an instruction or an operand of the instruction.
  - The data read is brought from the memory to MDR.
  - Then it can be transferred to the required register or ALU for further operation.

Storing a Word into Memory

- The steps involved to store a word into the memory:
  - The processor specifies the address of the memory location where the data is to be written.
  - The data to be written in loaded into MDR.
  - The processor requests a write operation.
  - The content of MDR will be written to the specified memory location.

Connecting MDR to Memory Bus and Internal Bus

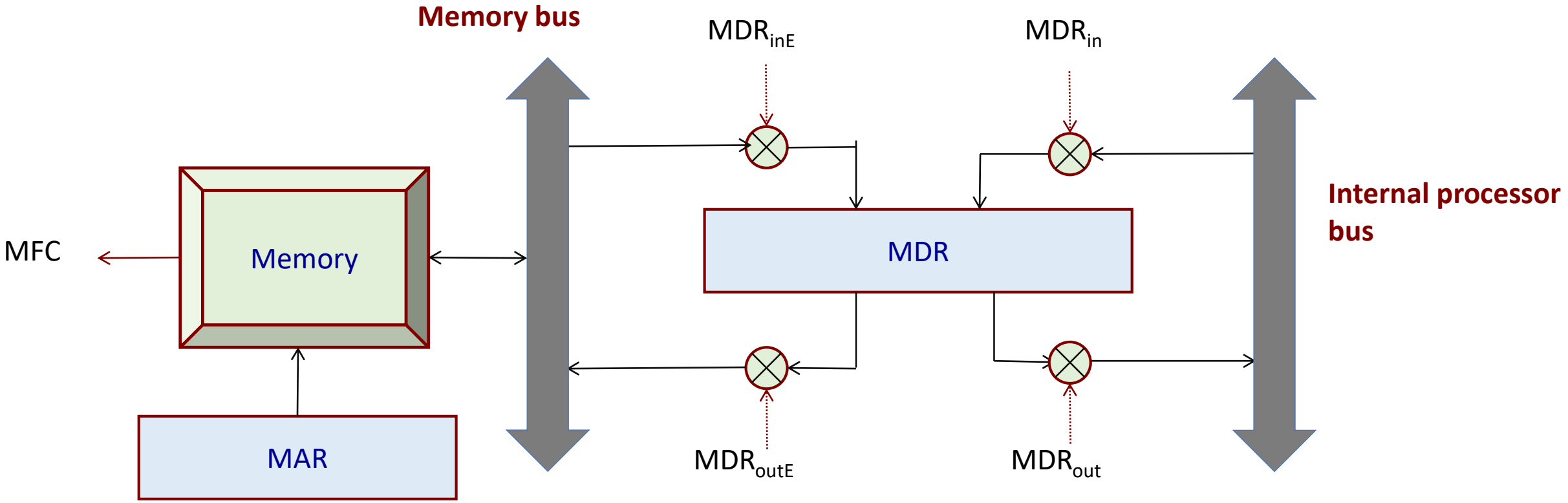

- Memory read/write operation:
  - The address of memory location is transferred to MAR.
  - At the same time a read/write control signal is provided to indicate the operation.
  - For read the data from memory data bus comes to MDR by activating MDR_{inE}.
  - For write the data from MDR goes to memory data bus by activating the signal MDR_{outE}.

- When the processor sends a read request, it has to wait until the data is read from the memory and written into MDR.
- To accommodate the variability in response time, the process has to wait until it receives an indication from the memory that the read operation has been completed.
- A control signal called *Memory Function Complete* (MFC) is used for this purpose.
  - When this signal is 1, indicates that the content of the specified location is read and are available on the data line of the memory bus.
  - Then the data can be made available to MDR.

Fetch a word: MOVE R1, (R2)

1. MAR ← R2
2. Start a Read operation on the memory bus
3. Wait for the MFC response from the memory
4. Load MDR from the memory
5. R1 ← MDR

Control steps:

a) $R2_{out}$, MAR_{in}, Read
b) MDR_{inE}, WMFC
c) MDR_{out}, $R1_{in}$

Store a word: MOVE (R1), R2

1. MAR ← R1
2. MDR ← R2
3. Start a Write operation on the memory bus
4. Wait for the MFC response from the memory

Control steps:

a) $R1_{out}$, MAR_{in}
b) $R2_{out}$, MDR_{in}, Write
c) MDR_{outE}, WMFC

Execution of a Complete Instruction

ADD R1, R2 // R1 = R1 + R2

T1: PC_{out}, MAR_{in}, Read, Select4, ADD, Z_{in}

T2: Z_{out}, PC_{in}, Y_{in}, WMFC

T3: MDR_{out}, IR_{in}

T4: $R1_{out}$, Y_{in}, SelectY

T5: $R2_{out}$, ADD, Z_{in}

T6: Z_{out}, $R1_{in}$

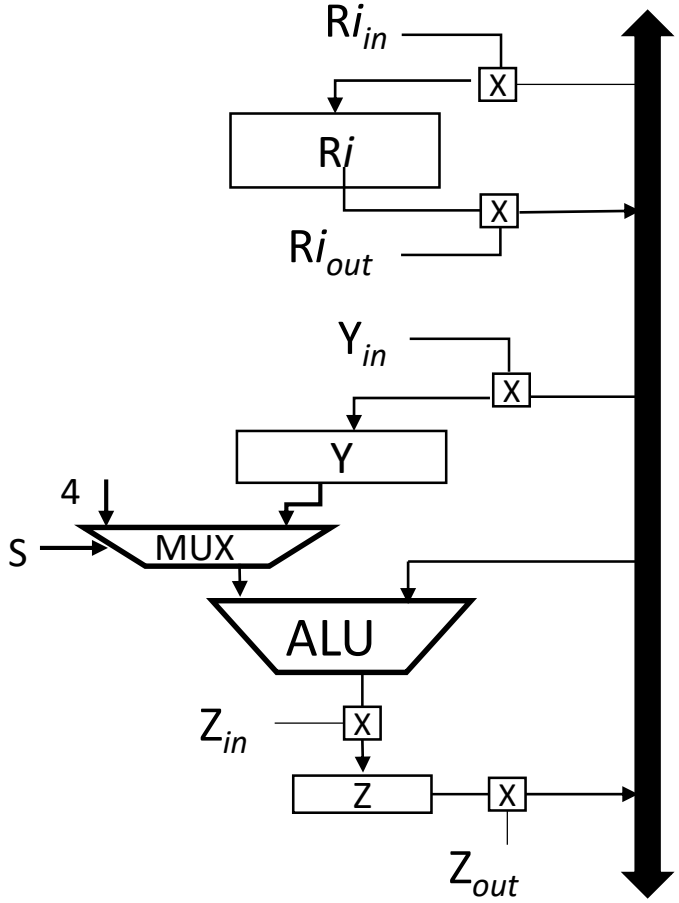

Example for a Three Bus Organization

SUB R1, R2, R3 // R1 = R2 – R3

T1: PC_{out}, R = B, MAR_{in} , READ, IncPC

T2: WMFC

T3: MDR_{outB} , R = B, IR_{in}

T4: $R2_{outA}$, $R3_{outB}$, SelectA, SUB, $R1_{in}$, End

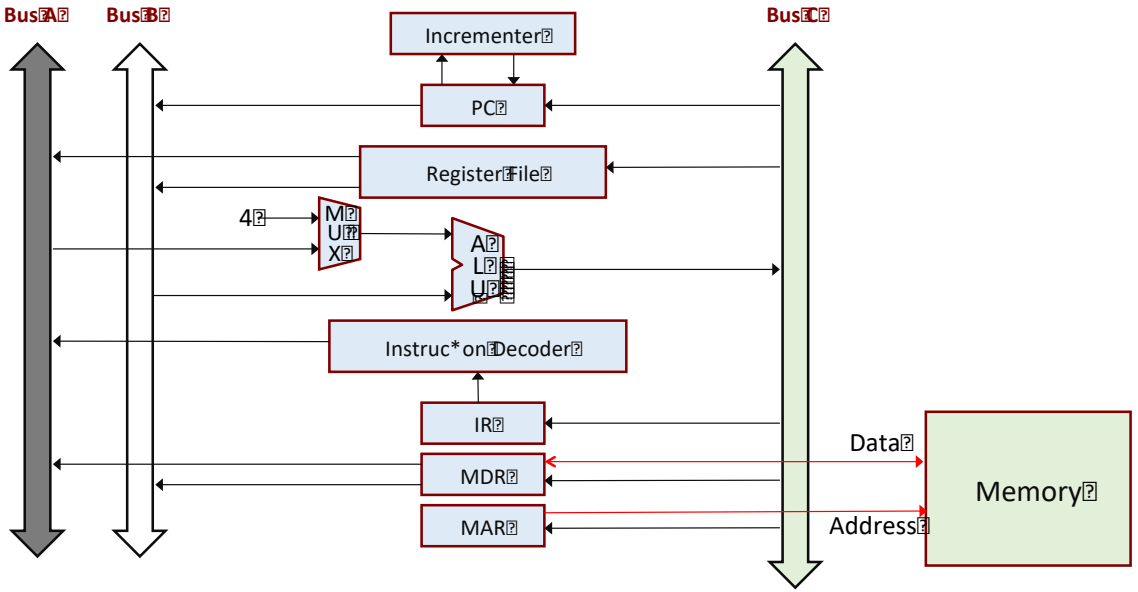

Micro-operations Examples

Introduction

- We select a set of 12 instructions.
- Discuss the control signals required to execute these instructions on the single-bus processor architecture.

Various instructions: Control sequence

1.	ADD R1, R2	// R1 = R1+R2
2.	ADD R1, LOCA	// R1 = R1 + Mem[LOCA]
3.	LOAD R1, LOCA	// R1 = Mem[LOCA]
4.	STORE LOCA, R1	// Mem[LOCA] = R1
5.	MOVE R1, R2	// R1 = R2
6.	MOVE R1, #10	// R1 = 10
7.	BR LOCA	// PC = LOCA
8.	BZ LOCA	// PC = LOCA if Zero flag is set
9.	INC R1	// R1 = R1 + 4
10.	DEC R1	// R1 = R1 – 4
11.	CMP R1, R2	// R1 – R2
12.	HALT	// Machine Halt

1. ADD R1, R2 (R1 = R1+R2)

Steps	Action
1	PC_{out}, MAR_{in}, Read, Select4, Add, Z_{in}
2	Z_{out}, PC_{in}, Y_{in}, WMFC
3	MDR_{out}, IR_{in}
4	$R1_{out}$, Y_{in}
5	$R2_{out}$, SelectY, Add, Z_{in}
6	Z_{out}, $R1_{in}$, End

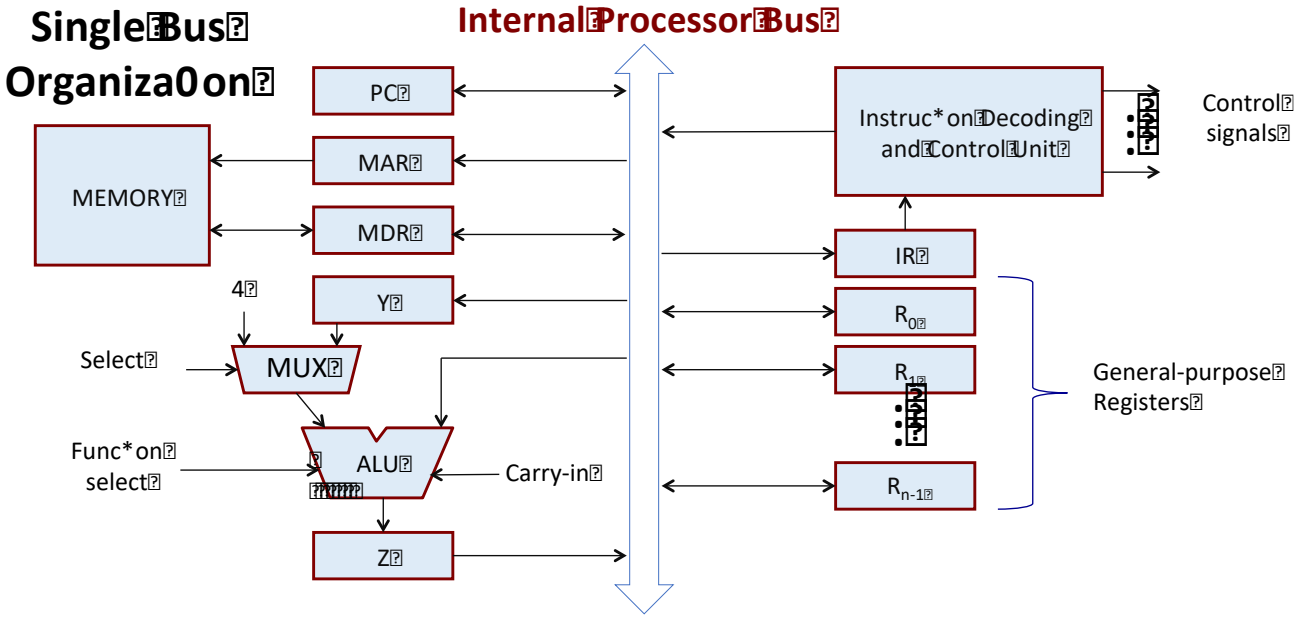

2. ADD R1, LOCA (R1 = R1 + Mem[LOCA])

Steps	Action
1	PC_{out}, MAR_{in}, Read, Select4, Add, Z_{in}
2	Z_{out}, PC_{in}, Y_{in}, WMFC
3	MDR_{out}, IR_{in}
4	Address field of IRout, MAR_{in}, Read
5	$R1_{out}$, Y_{in}, WMFC
6	MDR_{out}, SelectY, Add, Z_{in}
7	Z_{out}, $R1_{in}$, End

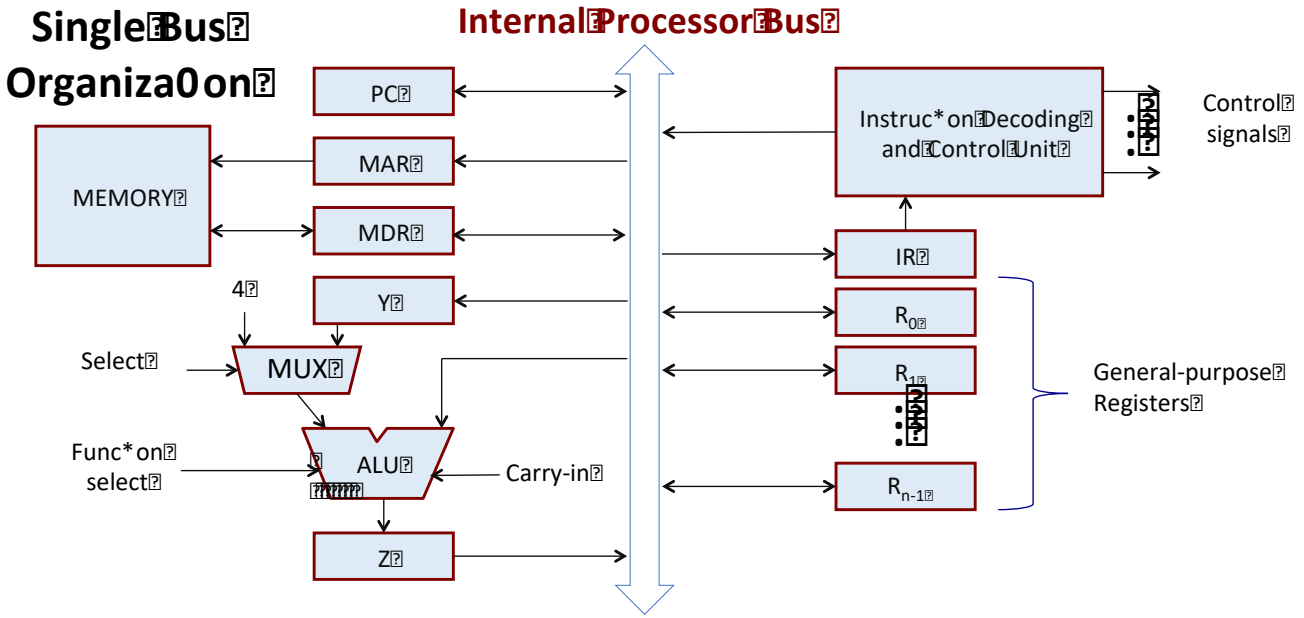

3. LOAD R1, LOCA (R1 = Mem[LOCA])

Steps	Action
1	PC_{out}, MAR_{in}, Read, Select4, Add, Z_{in}
2	Z_{out}, PC_{in}, Y_{in}, WMFC
3	MDR_{out}, IR_{in}
4	Address field of IRout, MAR_{in}, Read
5	WMFC
6	MDR_{out}, $R1_{in}$, END

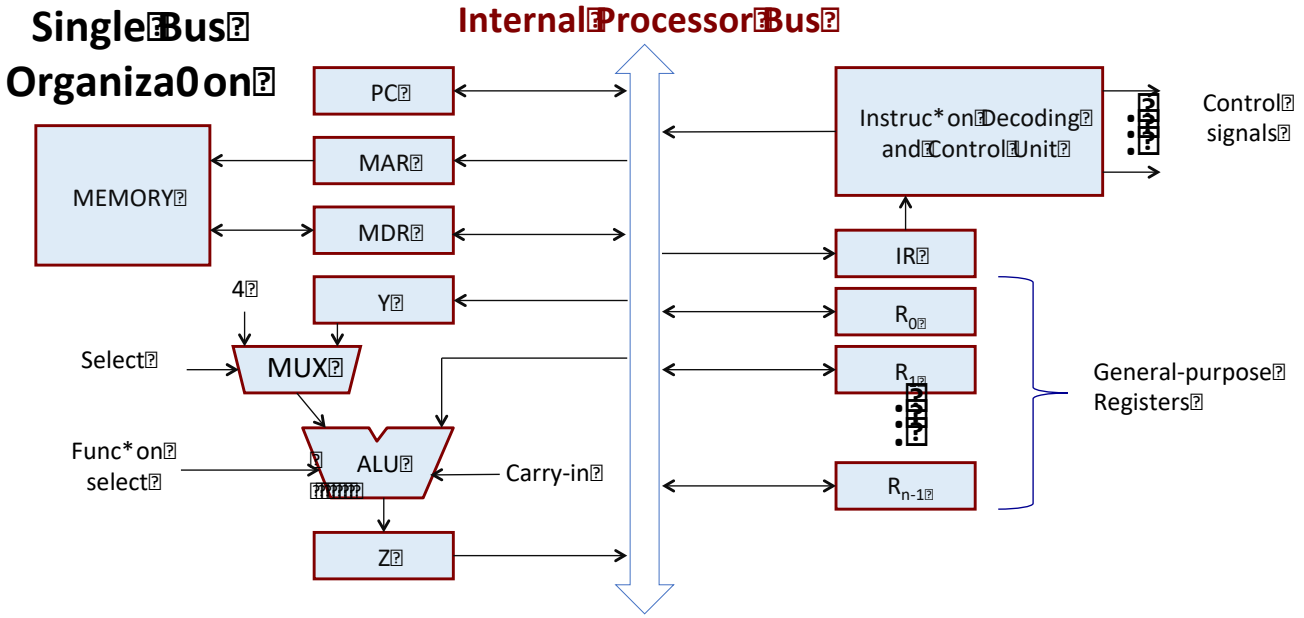

4. STORE LOCA, R1 (Mem[LOCA] = R1)

Steps	Action
1	PC_{out}, MAR_{in}, Read, Select4, Add, Z_{in}
2	Z_{out}, PC_{in}, Y_{in}, WMFC
3	MDR_{out}, IR_{in}
4	Address field of IRout, MAR_{in}
5	$R1_{out}$, MDR_{in}, Write
6	MDR_{outE}, WMFC, End

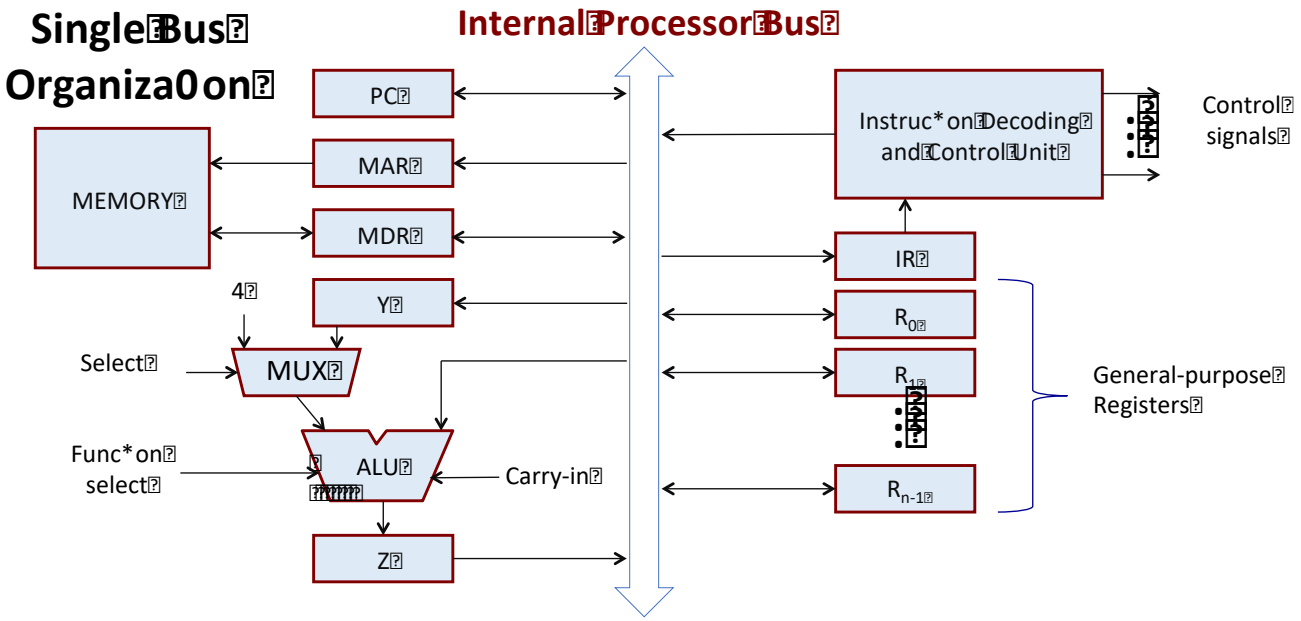

5. MOVE R1, R2 (R1 = R2)

Steps	Action
1	PC_{out}, MAR_{in}, Read, Select4, Add, Z_{in}
2	Z_{out}, PC_{in}, Y_{in}, WMFC
3	MDR_{out}, IR_{in}
4	$R2_{out}$, $R1_{in,}$ END

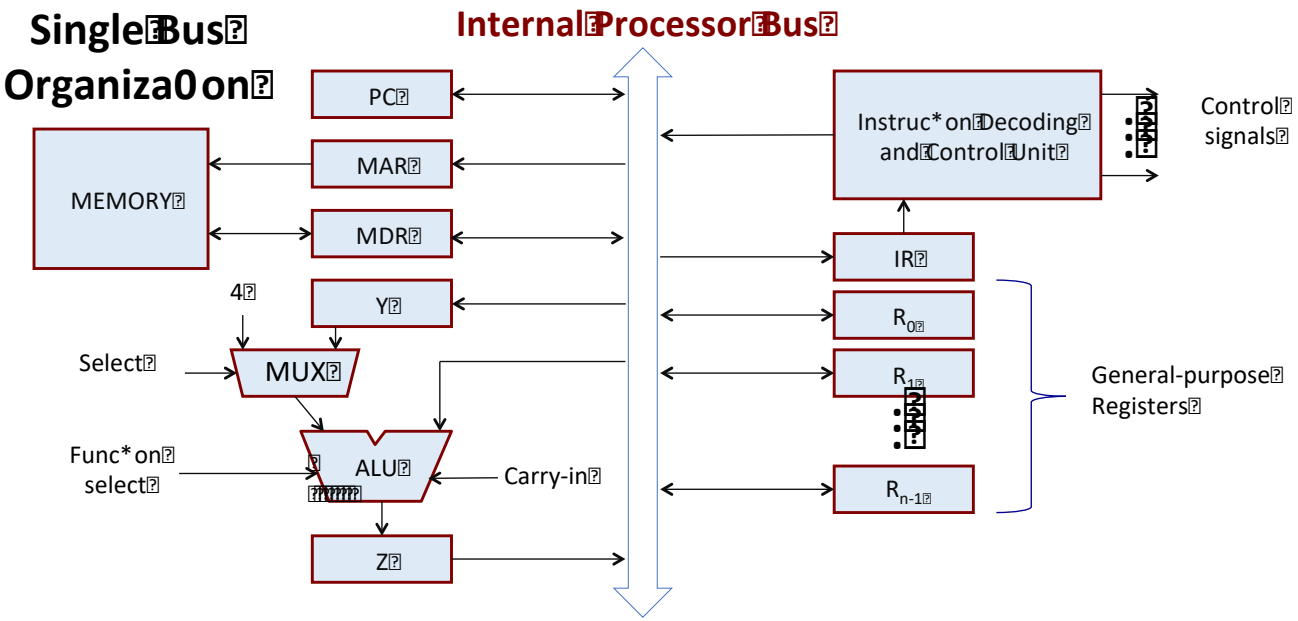

6. MOVE R1, #10 (R1 = 10)

Step	Action
1	PC_{out}, MAR_{in}, Read, Select4, Add, Z_{in}
2	Z_{out}, PC_{in}, Y_{in}, WMFC
3	MDR_{out}, IR_{in}
4	Immediate field of IR_{out}, $R1_{in}$, END

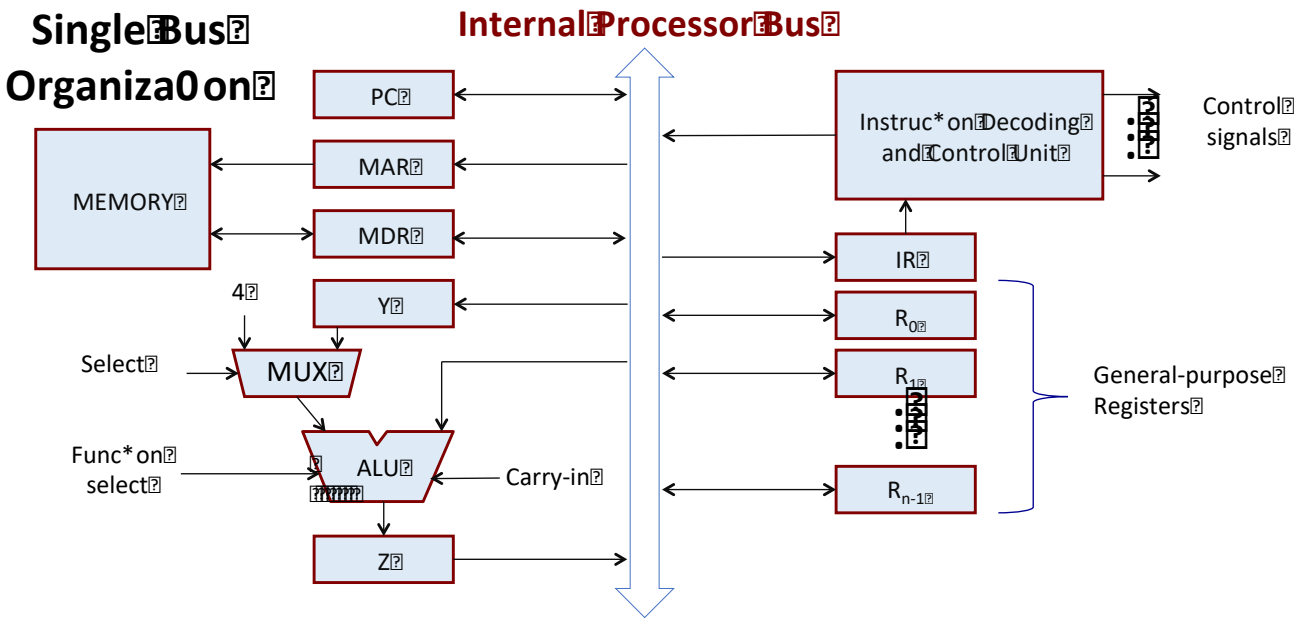

7. BRANCH Label (PC = PC + offset)

Step	Action
1	PC_{out}, MAR_{in}, Read, Select4, Add, Z_{in}
2	Z_{out}, PC_{in}, Y_{in}, WMFC
3	MDR_{out}, IR_{in}
4	Offset-field-of-IR_{out}, SelectY, Add, Z_{in}
5	Z_{out}, PC_{in}, End

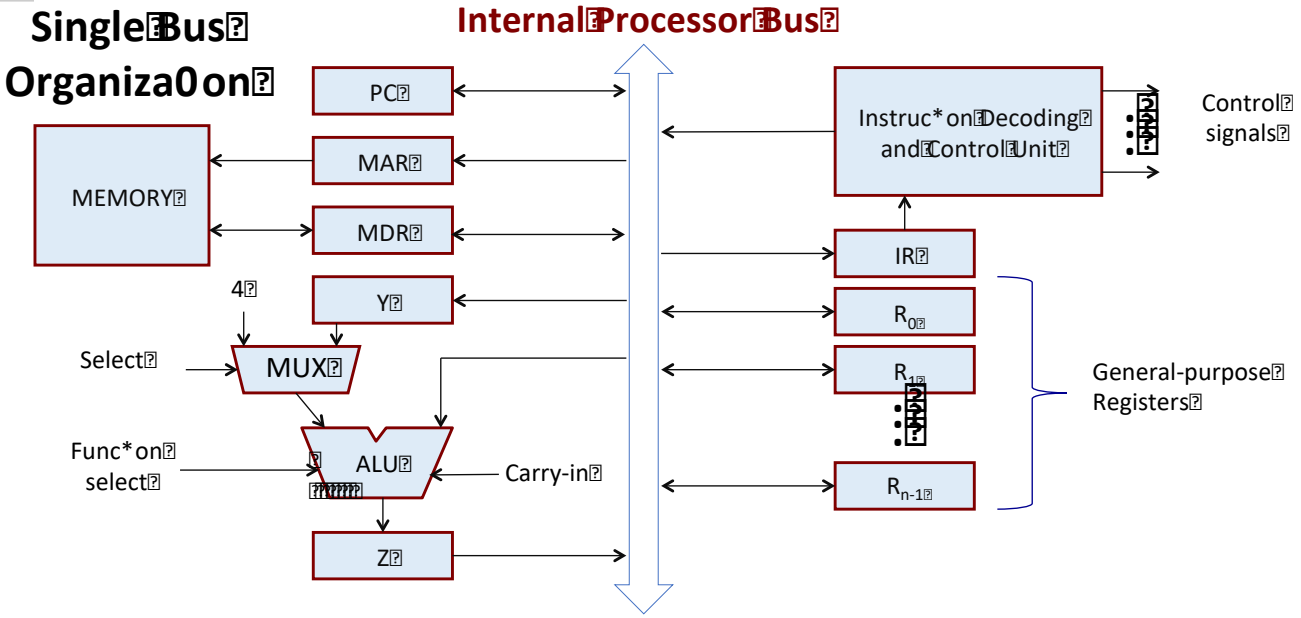

8. BNZ Label (if Z=1 PC = PC + offset)

Step	Action
1	PC_{out}, MAR_{in}, Read, Select4, Add, Z_{in}
2	Z_{out}, PC_{in}, Y_{in}, WMFC
3	MDR_{out}, IR_{in}
4	Offset-field-of-IR_{out}, SelectY, Add, Z_{in}, If Z=0 then End
5	Z_{out}, PC_{in}, End

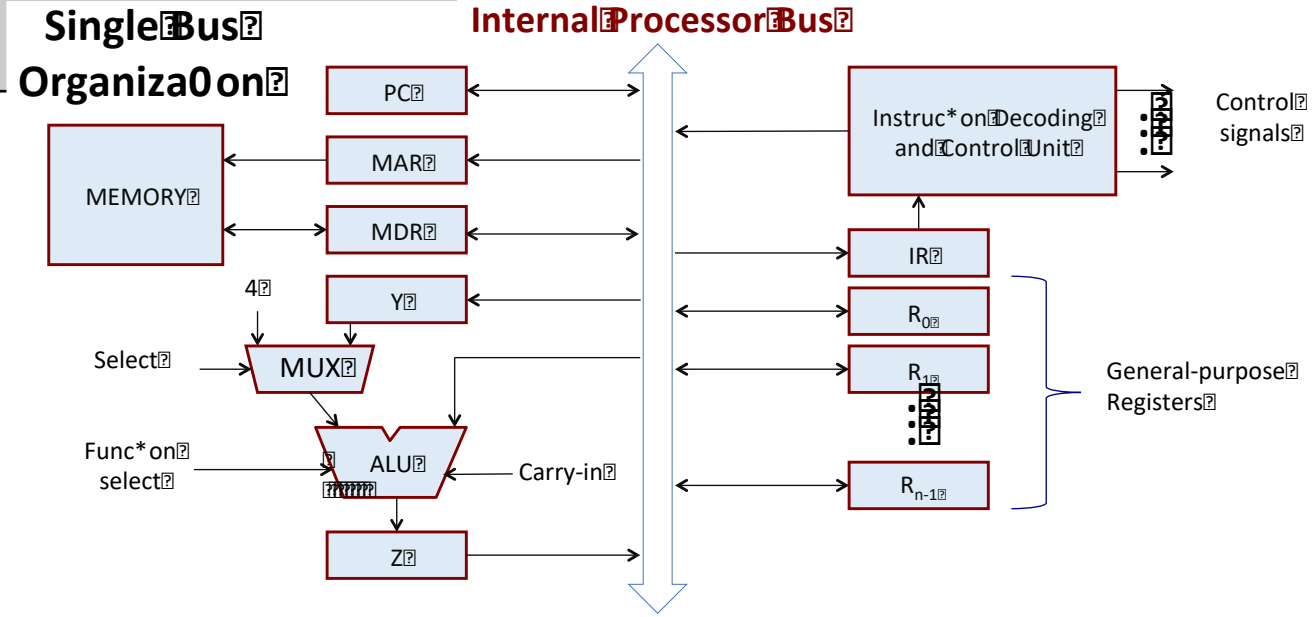

9. INC R1 (R1 = R1 + 4)

Steps	Action
1	PC_{out}, MAR_{in}, Read, Select4, Add, Z_{in}
2	Z_{out}, PC_{in}, Y_{in}, WMFC
3	MDR_{out}, IR_{in}
4	$R1_{out}$, Select4, Add, Z_{in}
5	Z_{out}, $R1_{in}$, End

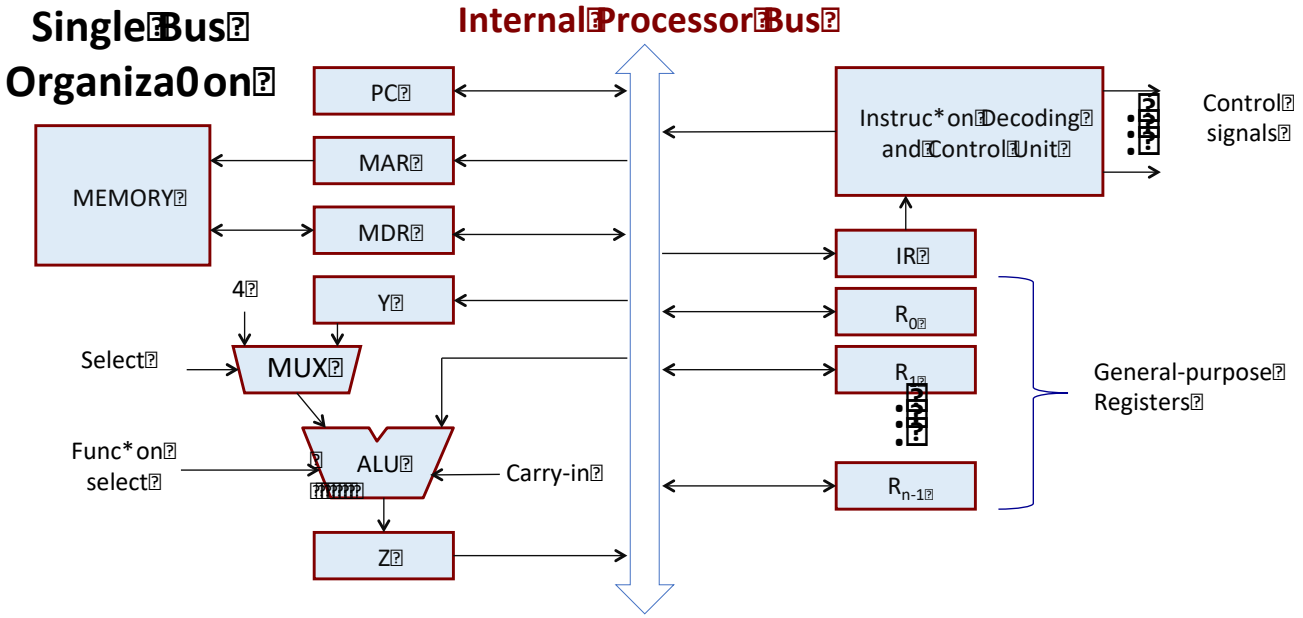

10. DEC R1 (R1 = R1 – 4)

Steps	Action
1	PC_{out}, MAR_{in}, Read, Select4, Add, Z_{in}
2	Z_{out}, PC_{in}, Y_{in}, WMFC
3	MDR_{out}, IR_{in}
4	$R1_{out}$, Select4, SUB, Z_{in}
5	Z_{out}, $R1_{in}$, End

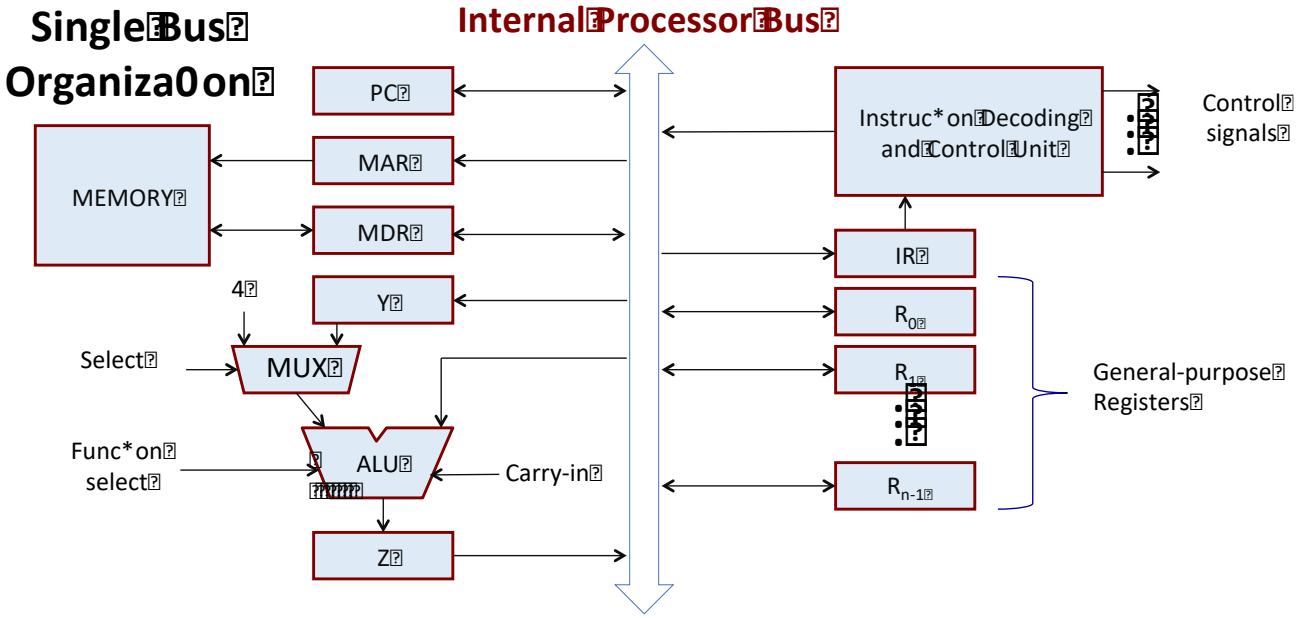

11. CMP R1, R2

Steps	Action
1	PC_{out}, MAR_{in}, Read, Select4, Add, Z_{in}
2	Z_{out}, PC_{in}, Y_{in}, WMFC
3	MDR_{out}, IR_{in}
4	$R1_{out}$, Y_{in}
5	$R2_{out}$, SelectY, Sub, Z_{in}, End

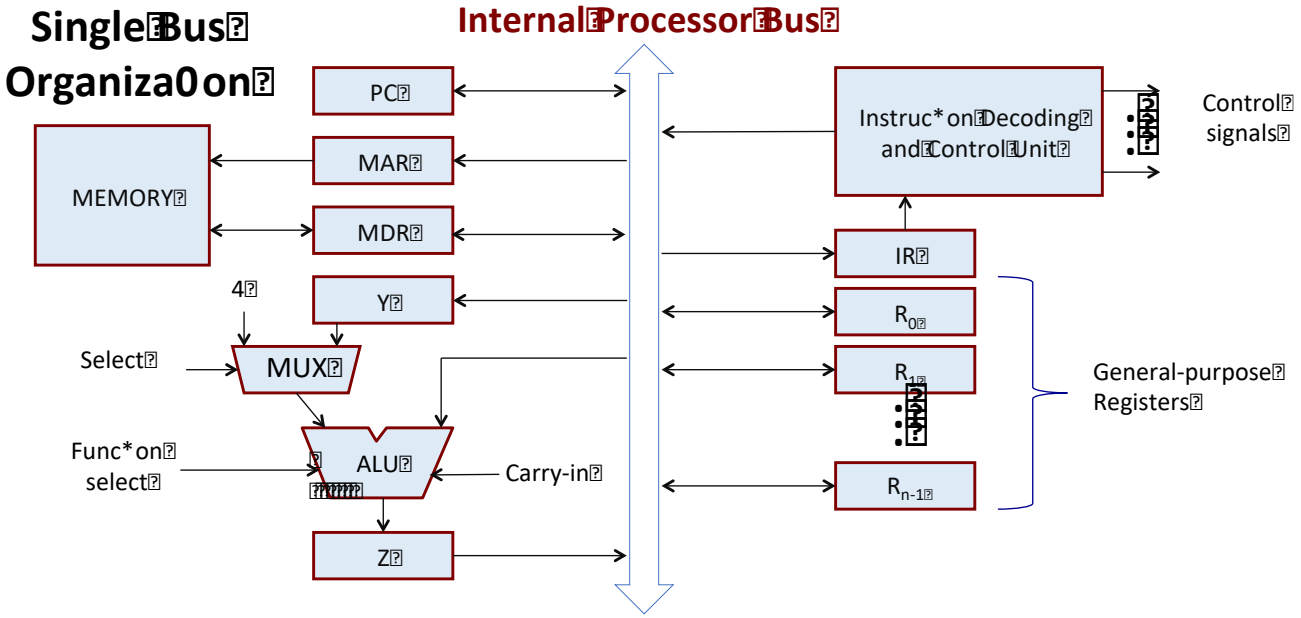

12. HALT
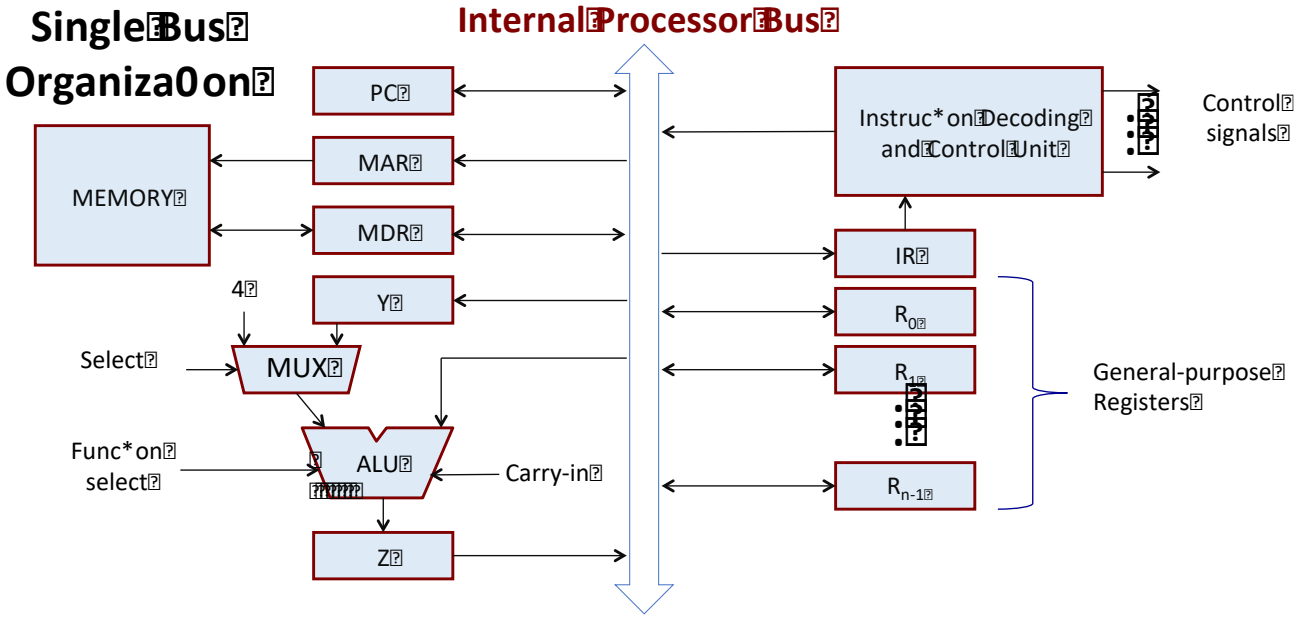
Steps	Action
1	PC_{out}, MAR_{in}, Read, Select4, Add, Z_{in}
2	Z_{out}, PC_{in}, Y_{in}, WMFC
3	MDR_{out}, IR_{in}
4	End