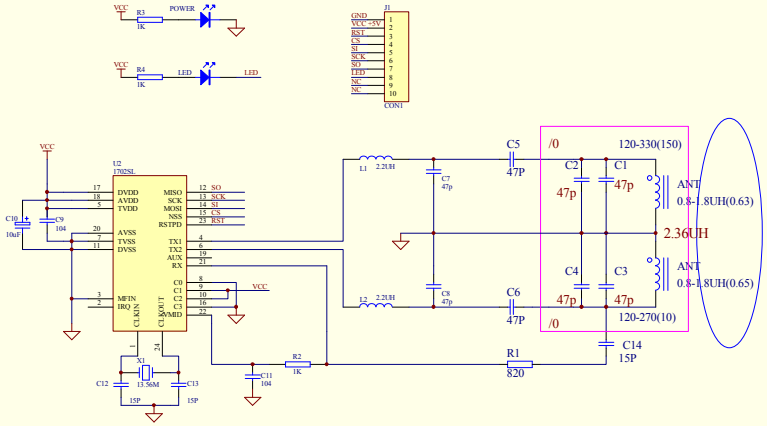

Title		
Size A3	Number	Revision
Date: 14-Apr-2012		Sheet of
File: L:\RF\[illegible]\F\M1702SL.DDB		Drawn By: