STARLINK | ACCESSORIES

Available to purchase after receiving your order confirmation email.

PIPE ADAPTER

Designed to attach to any pole with a max diameter of 2.5" (64 mm). Slide adapter over the top of the existing pole, fasten provided screws, and drop Starlink in.

Tools Needed:
7/16" (11.1 mm) Socket Wrench

Package Dimensions:
8" x 5.5" x 3" / 20.7 x 14 x 8 cm

Package Weight: 3.1 lbs / 1.39 kg

Compatibility: Circular Starlink

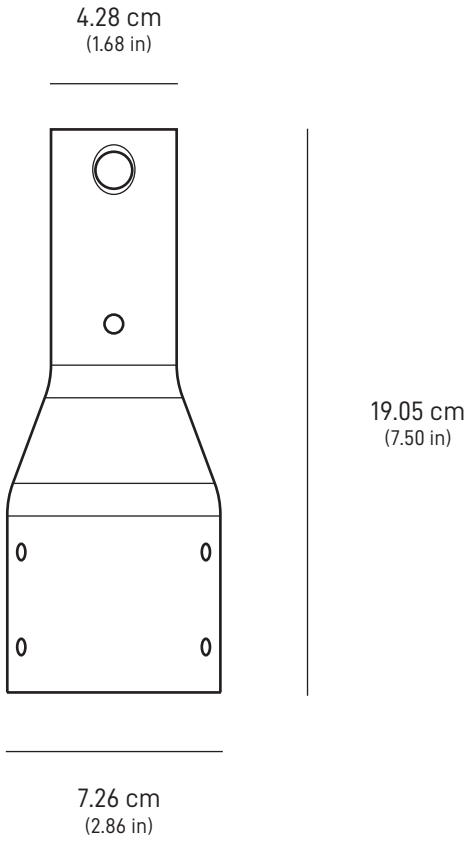

VOLCANO MOUNT

Designed for installation on shingled roofs, requires drilling. Not recommended for tile, slate, and clay roofing. Starlink must be mounted within 35° of vertical.

Tools Needed:
Drill, 5/32" (4 mm) Drill Bit, 1/2" (12.7 mm) Socket Wrench

Package Dimensions:
13" x 6.5" x 3" / 33 x 16.5 x 7.6 cm

Package Weight: 2.6 lbs / 1.2 kg

Compatibility: Circular Starlink

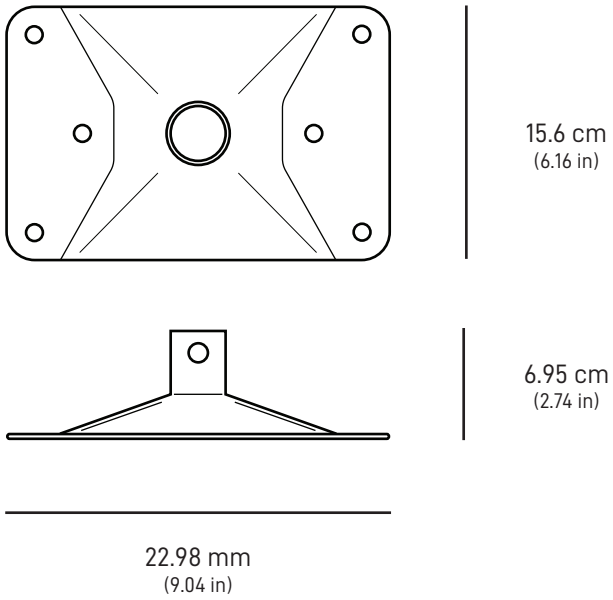

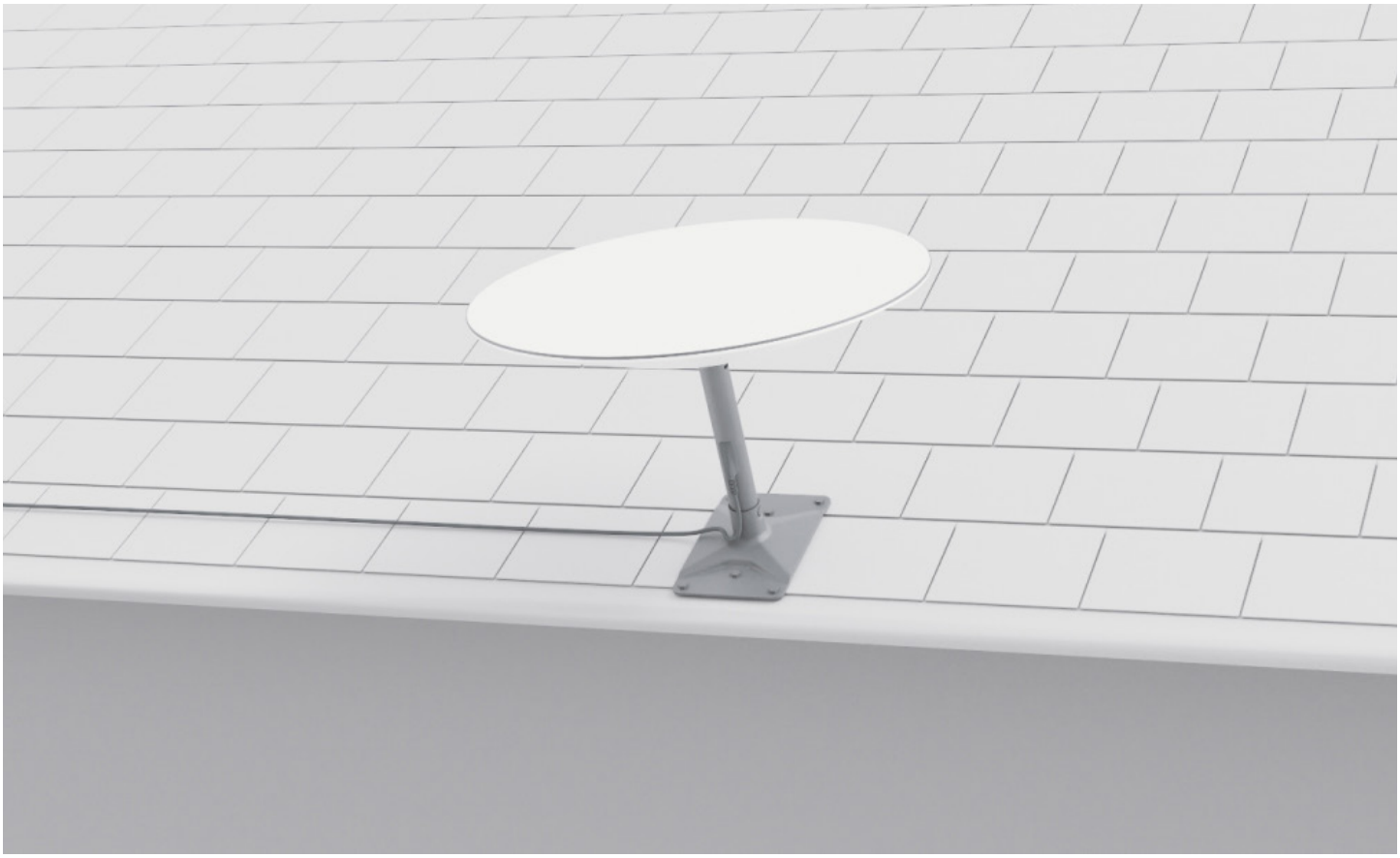

FLASHING MOUNT

Designed for water-tight protection when installing Starlink on shingles and provides storage for extra cable. **Requires additional purchase of Volcano Roof Mount.**

Tools Needed:
Drill, Phillips Head Drill Bit, 5/16" (7.9 mm) and 7/16" (11.1 mm) Socket Wrenches, 7/16" (11.1 mm) Wrench, Utility Knife, Pry Bar, Roof Cement, Measuring Tape, Stud Finder, Pencil, and Goggles

Package Dimensions:
15 5/8" x 15 ¼" x 3" / 39.7 x 38.7 x 7.6 cm

Package Weight: 7 lbs / 3.2 kg

Compatibility: Circular Starlink

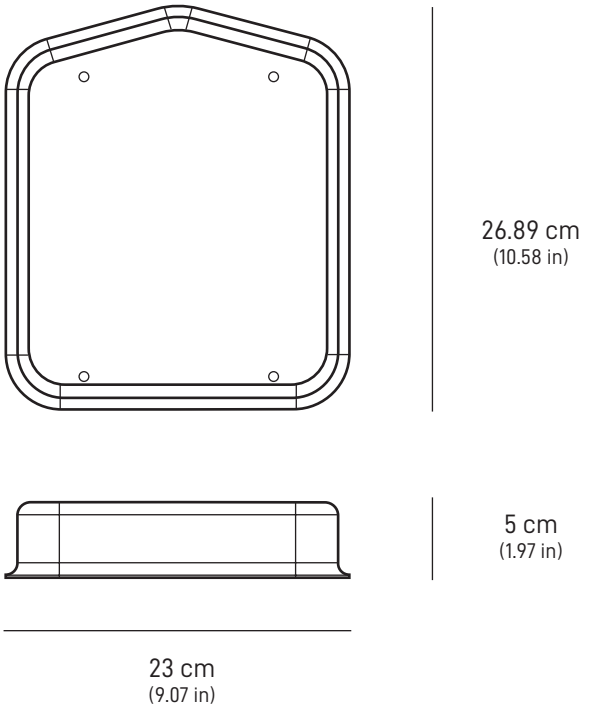

GROUND POLE MOUNT

Designed for in-ground installation when roof or wall mounting is not possible; requires digging.

Tools Needed:
Shovel, Mortar Hoe, Mixing Trough / Bucket, Gloves, Concrete Mix, and Water

Package Dimensions:
95.75" x 4.25" x 4.25" / 243 x 10.8 x 10.8 cm

Package Weight: 13 lbs / 5.9 kg

Compatibility: Circular Starlink

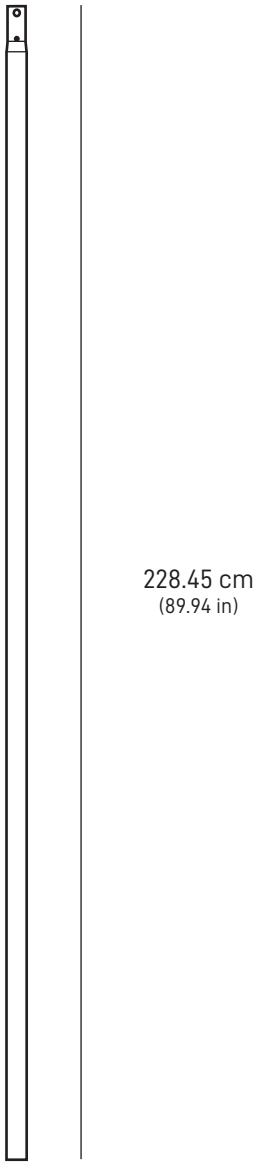

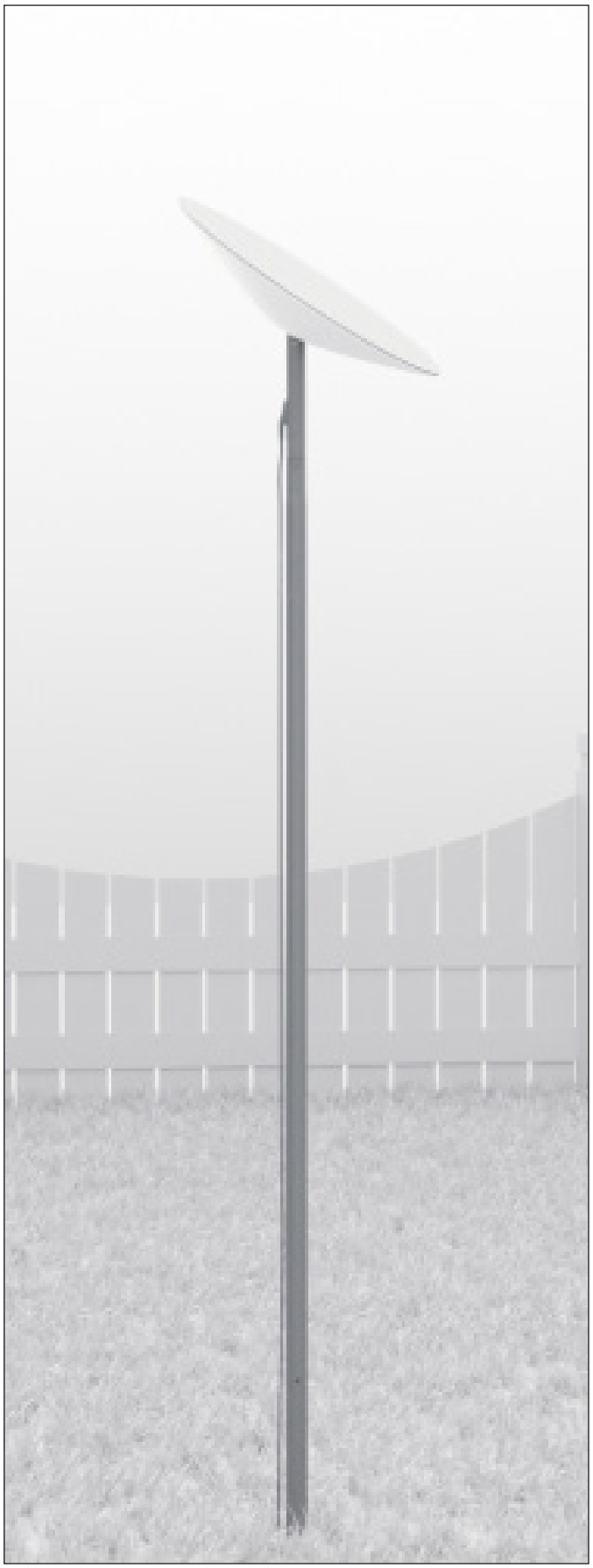

CABLE ROUTING KIT

Designed for drilling through most walls. Not recommended for masonry, concrete, or hard coat stucco. Best for customers with prior internet cable routing experience and installation; must be comfortable drilling through walls. Kit includes a spade bit, drill bit, cable routing tool, silicone sealant, grommets, and wall clips.

Tools Needed:
Drill, Stud / Electrical Finder

Package Dimensions:
3.75" x 5.25" x 1.75" / 34.9 x 13.3 x 4.4 cm

Package Weight: 0.83 lbs / 0.38 kg

Compatibility: Circular Starlink

MASONRY ROUTING KIT

Designed for drilling through masonry, concrete or hard coat stucco (excluding EIFS) walls. Best for customers with prior internet cable routing experience and installation; must be comfortable drilling through walls. Kit includes a spade bit, drill bit, cable routing tool, silicone sealant, grommets, and wall clips.

Tools Needed:
Hammer, Hammer Drill, Phillips Head Drill Bit,
Stud / Electrical Finder, Goggles, Gloves, and Mask

Package Dimensions:
13.875" x 6.5" x 1.75" / 35.2 x 16.5 x 4.4 cm

Package Weight: 2.1 lbs / 1 kg

Compatibility: Circular Starlink

THANK YOU.