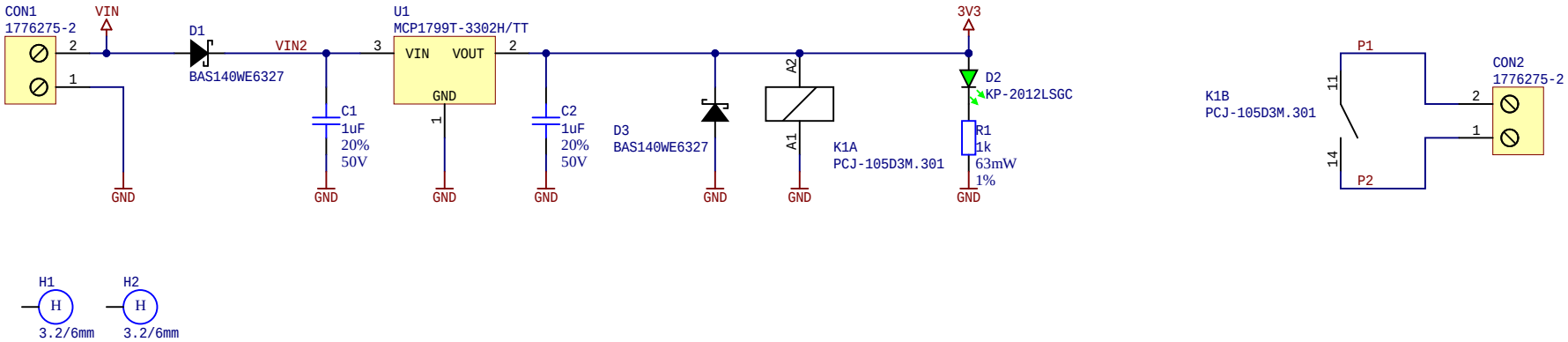

Title: MiniRelay.SchDoc	Project: MiniRelay.PrjPcb	Rev: A	Address:
Description:	Author: Łukasz Przeniosło	Contact: lukasz@przenioslo.com	Ofiar Katynia 21 72-100 Goleniów Poland
Single 9mm, TH35/ DIN rail mini relay module. Coil voltage = 5 - 35 V, Poles voltage = 230 VAC.	Company: Przenioslo Electronics & Software	Sheet 1 of 1	
	Created: 2023-06-15 Edited: 2023-06-19 File: D:\storage\repo\git\github\MiniRelay\MiniRelay.SchDoc		