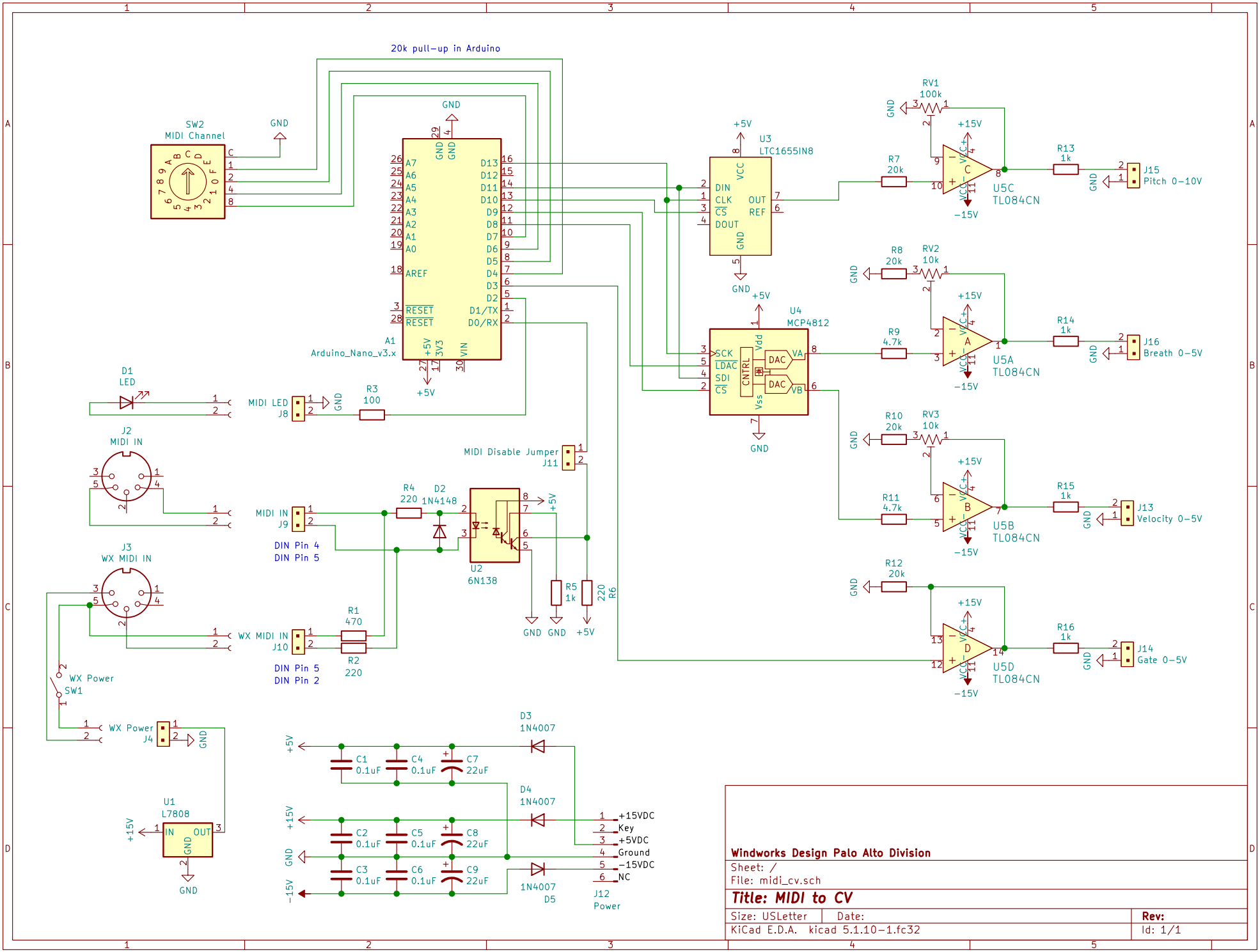
20k pull-up in Arduino
SW2
MIDI Channel
GND
A1
Arduino_Nano_v3.x
U3
LTC1655IN8
U4
MCP4812
+5V
RV1
100k
RV2
10k
RV3
10k
R7
20k
R8
20k
R9
4.7k
R10
20k
R11
4.7k
R12
20k
R13
1k
R14
1k
R15
1k
R16
1k
+15V
−15V
U5C
U5A
U5B
U5D
TL084CN
J15
Pitch 0−10V
J16
Breath 0−5V
J13
Velocity 0−5V
J14
Gate 0−5V
D1
LED
MIDI LED
J8
R3
100
J2
MIDI IN
MIDI Disable Jumper
J11
MIDI IN
J9
DIN Pin 4
DIN Pin 5
R4
220
D2
1N4148
U2
6N138
R5
1k
R6
220
J3
WX MIDI IN
WX MIDI IN
J10
R1
470
R2
220
DIN Pin 5
DIN Pin 2
WX Power
SW1
WX Power
J4
U1
L7808
IN
OUT
C1
0.1uF
C4
0.1uF
C7
22uF
C2
0.1uF
C5
0.1uF
C8
22uF
C3
0.1uF
C6
0.1uF
C9
22uF
D3
1N4007
D4
1N4007
D5
1N4007
+15VDC
Key
+5VDC
Ground
−15VDC
NC
J12
Power
Windworks Design Palo Alto Division
Sheet: /
File: midi_cv.sch
Title: MIDI to CV
Size: USLetter
Date:
Rev:
KiCad E.D.A. kicad 5.1.10−1.fc32
Id: 1/1