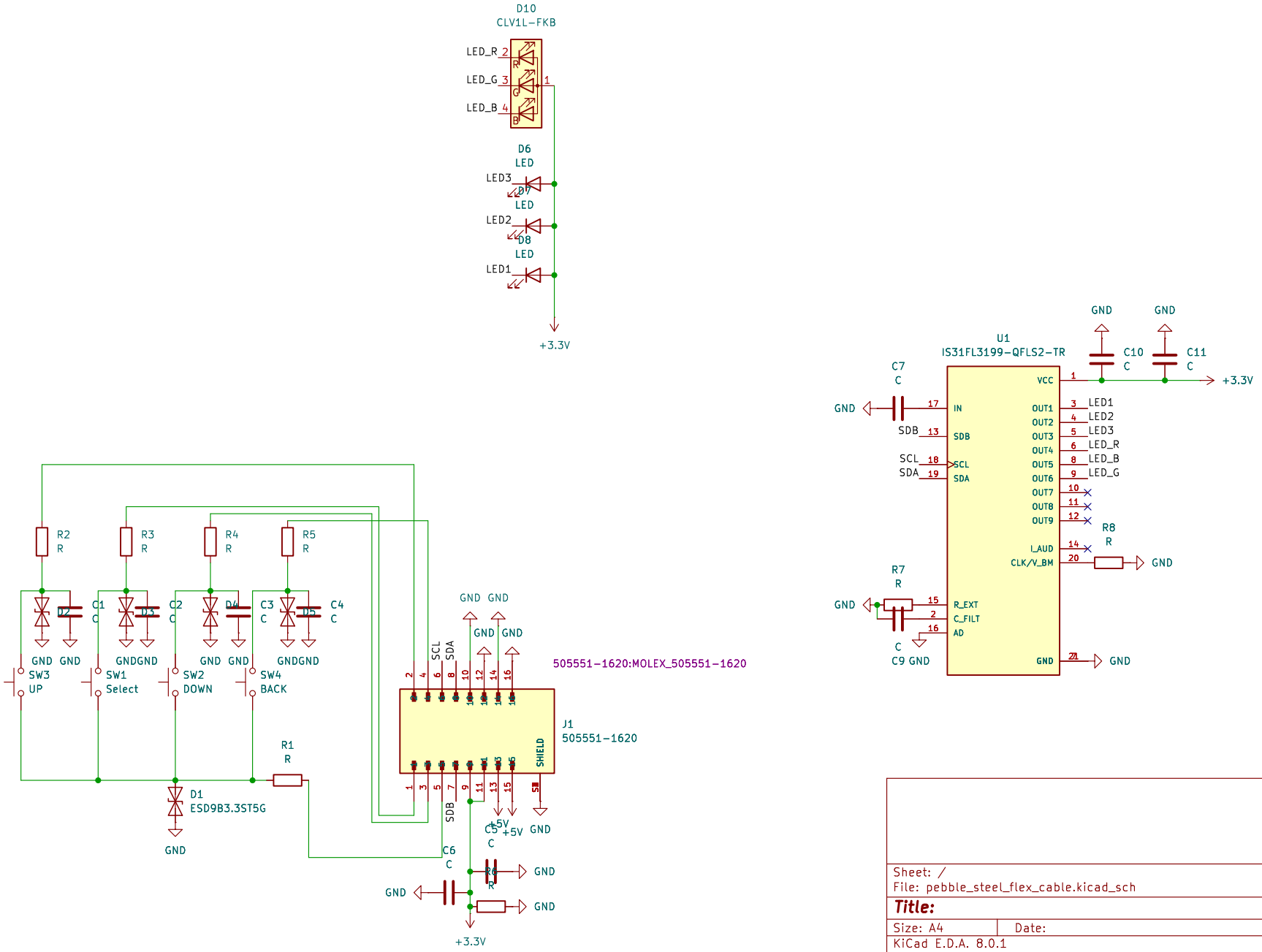

Sheet: /
File: pebble_steel_flex_cable.kicad_sch

Title:

Size: A4	Date:	Rev:
KiCad E.D.A. 8.0.1		Id: 1/1