ECE6140 Project 1

Ryan Le, Braden Radle, Brendon Simonsen

1 Introduction

Accurate measurement of physical quantities often requires converting a small change in an electrical property into a measurable signal. Many sensors operate by producing a small change in resistance when subjected to mechanical stimuli such as force, pressure, or strain. Because these resistance changes are typically very small, bridge circuits are commonly used to convert them into a differential voltage signal that can be measured and processed. The Wheatstone bridge is a widely used configuration for this purpose because it allows precise detection of resistance variations while minimizing the effects of common-mode noise and supply fluctuations. In practical systems, the differential voltage produced by the bridge is often very small and therefore must be amplified before it can be accurately measured. Amplification circuits, such as differential or instrumentation amplifiers, are frequently used to increase the signal magnitude while preserving the relationship between the applied stimulus and the electrical output.

In this project, a measurement system was designed to determine the weight applied to a force sensor using a Wheatstone bridge and an amplification circuit. One leg of the bridge contained the pressure sensor while the remaining legs consisted of fixed resistors selected to balance the bridge at room temperature with a 100g load applied to the sensor. When the applied weight deviates from this balanced condition, the resistance of the sensor changes, producing a differential voltage at the output of the bridge. This voltage was then amplified using a designed amplifier circuit in order to produce a measurable output signal. By recording the output voltage corresponding to known applied weights, a calibration curve was generated to characterize the relationship between the applied force and the electrical output of the system.

2 Methods

The goal of this section is to describe the process used to design, implement, and evaluate the force measurement system. The experimental procedure consisted of several stages including the design of a Wheatstone bridge, implementation of an amplification circuit, calibration of the sensor, and characterization of the system performance. These steps included evaluating the temperature sensitivity of the sensor, measuring the common-mode rejection ratio (CMRR), and determining the effective resolution of the measurement system. Each stage of the experiment is described in detail in the following subsections.

2.1 Steps 1-3: Design and Implement a Wheatstone Bridge and Amplifier

A quarter-bridge configuration was initially designed in which a single resistor of the Wheatstone bridge was replaced with the force sensor. During testing, it was observed that fluctuations in room temperature caused the bridge to become unbalanced. To reduce the impact of temperature drift on the measurement system, the design was modified to use a half-bridge configuration. A half-bridge provides improved compensation for temperature-induced resistance changes, reducing measurement error caused by environmental temperature variations.

During the bridge design process, it was observed that the resistance of the sensor varied by several kilo-ohms depending on the location of the applied weight. To improve measurement consistency, two pieces of electrical tape were placed on the bottom side of the metal square platform provided for applying weight to the sensor. In this configuration, the bottom side refers to the surface with two dimples facing outward, which was placed in contact with the sensor. This approach secured the metal platform to the

sensor and created two consistent points of contact. As a result, the placement of the applied weight became more repeatable and produced more stable resistance measurements from the sensor.

An instrumentation amplifier configuration was selected for signal amplification due to its improved accuracy and common-mode rejection compared to a standard differential amplifier. Prior to constructing the amplifier in hardware, the circuit was designed and tested in simulation using LTSpice. The simulation allowed verification that the amplifier provided the desired gain and operated within the expected voltage limits before implementation in the physical circuit. The completed LTSpice design of the measurement circuit is shown in Figure 1.

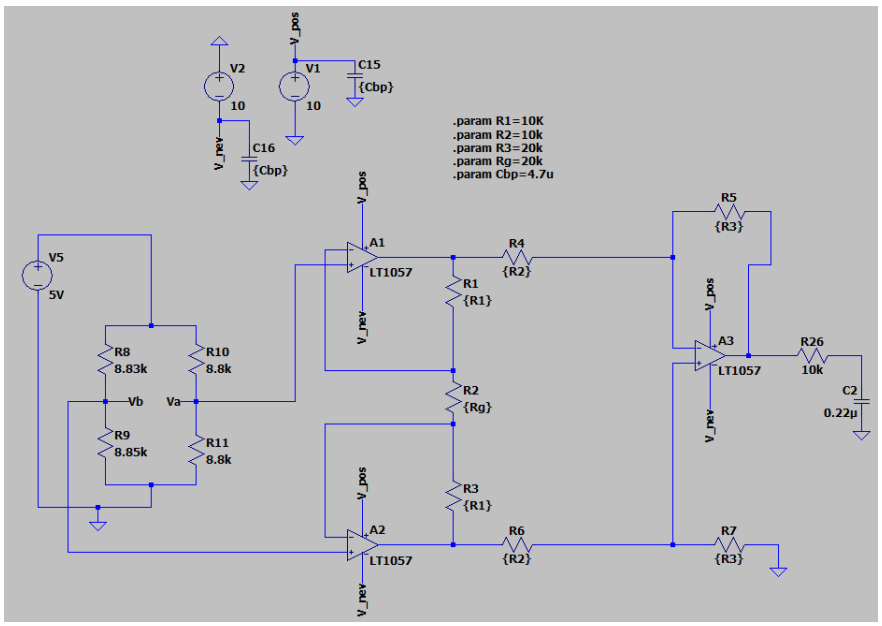

Figure 1: Measurement circuit simulation in LTSpice.

Inspection of the simulation shows that bypass capacitors were placed in parallel with the power supply rails. These capacitors provide a low-impedance path to ground for AC components originating from the power supply while presenting a high impedance to DC signals. As a result, the bypass capacitors help reduce noise from the power supply and improve the stability of the amplifier circuit.

A low-pass filter was also implemented at the output of the amplifier to reduce high-frequency noise. An initial approach involved splitting resistor R_2 and placing a capacitor between the two resulting resistors. However, under DC conditions this configuration behaved as an open circuit and disrupted the operation of the amplification stage. An alternative configuration was then attempted by placing the capacitor before R_5, the feedback resistor, but this configuration also altered the intended gain of the amplifier. To avoid these issues, a simple first-order low-pass filter was placed after the amplifier stage. This filter configuration, observed in Fig. 1 as a resistor and capacitor in series, preserves the amplifier gain while attenuating unwanted high-frequency components. The filter was designed with a cutoff frequency of approximately 60 Hz.

When the amplifier was initially integrated with the half-bridge circuit, the output did not behave as expected. Further testing revealed that one of the operational amplifiers used in the circuit was malfunctioning. After replacing the faulty component, the amplifier produced a more reasonable output signal. However, the amplifier output was observed to saturate at the negative supply rail. To address this issue, the supply voltage provided to the operational amplifiers was increased to ± 10 V and the resistor values were adjusted to alter the amplifier gain to be 4. These modifications allowed the amplifier to operate within its linear region while maintaining 80% OFS of the amplifiers of the bridge output signal.

After the Wheatstone bridge and amplifier circuits were designed and implemented, a calibration procedure was performed to establish the relationship between the applied force and the measured output voltage. Known masses were sequentially applied to the sensor across the operating range of the system,

and the corresponding output voltages were recorded. These measurements were then used to generate a calibration curve that relates the output voltage of the amplifier to the applied force on the sensor. The collected data were processed using Python, where a best-fit trend line was calculated and plotted to characterize the transfer function of the measurement system. This calibration curve was later used to estimate unknown forces from measured output voltages.

2.2 Steps 4 and 7: Find Temperature Coefficients for Quarter & Half Bridge

This portion of the experiment focused on measuring the temperature coefficient of the sensor and evaluating the effectiveness of thermal compensation using a half-bridge configuration. To estimate the temperature coefficient, one of the sensors was placed on a heating pad and the resting temperature was first measured using an infrared thermometer. A 100g mass was then applied to the sensor and the corresponding output voltage of the measurement circuit was recorded. After the initial measurement was taken, a voltage of 5V was applied to the heating pad in order to gradually increase the temperature of the sensor. While the system warms up, the temperature of the sensor and the corresponding output voltage were recorded multiple times during this period. These measurements were later used to estimate the temperature coefficient of the sensor using the equations discussed in class. Additional data points corresponding to previously used calibration masses, 200g and 300g, were also recorded for comparison.

To simulate the behavior of a quarter-bridge configuration during the temperature coefficient measurement, heat was applied to only one of the force sensors while the other sensor component remained at approximately room temperature. This allowed the influence of temperature on a single sensing element to be observed directly through the bridge output.

Several experimental challenges were encountered during this portion of the procedure. In some cases, the temperature of the sensor and the metal plate used to distribute the applied force was not uniform, which resulted in variations in the measured voltage. Additionally, airflow within the room was observed to cause fluctuations in the measured temperature. To reduce these effects, the measurements were repeated and the room climate control system was disabled during data collection to minimize airflow near the sensor.

After completing the temperature coefficient measurements, the bridge was reconfigured to use two force sensors in order to reduce temperature-induced measurement error. This configuration approximates a half-bridge arrangement, where one sensor experiences the applied force while the second sensor primarily experiences the same temperature conditions. During this portion of the experiment, the heating pad was placed beneath both sensors to ensure that each sensing element experienced a similar temperature change. The temperature of the sensors was measured using the infrared thermometer while the same set of calibration masses was applied to the sensing element. The corresponding output voltages were recorded and compared to the previous measurements in order to evaluate the degree of thermal noise rejection provided by the half-bridge configuration.

2.3 Steps 5 and 6: Find the CMRR and Resolution of the Sensor System

To evaluate the performance of the sensor system, the common-mode rejection ratio (CMRR) and the resolution of the measurement system were investigated. The CMRR was measured by applying a sinusoidal signal with a DC offset as the power supply for the bridge circuit. Because the same signal appeared at both inputs of the amplifier, it acted as a common-mode signal. The output voltage of the amplifier was then measured and compared to the input signal amplitude to determine how effectively the system rejected the common-mode component.

The resolution of the measurement system was evaluated by repeatedly measuring the output voltage for small changes in applied mass. A 50g calibration weight was first applied to the sensor and the corresponding output voltage was recorded. An additional 1g mass was then added and the output voltage was measured again. This process was repeated multiple times in order to determine the mean and standard deviation of the measured voltages. The procedure was then repeated using a 5g increment to determine whether the system could reliably distinguish between small changes in applied force.

3 Results

This section presents the experimental results obtained from the designed measurement system. The results include the implementation and verification of the Wheatstone bridge, the performance of the instrumentation amplifier, and the calibration of the sensor relating output voltage to applied force. Additional measurements were performed to evaluate the effects of temperature on the sensor output, determine the common-mode rejection ratio (CMRR) of the system, and estimate the effective resolution of the measurement setup.

3.1 Designing the Wheat Stone Bridge

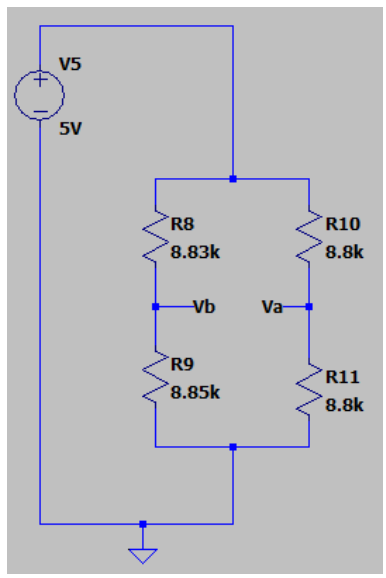

Figure 2: Wheatstone bridge circuit in LTSpice.

After attempting to get an accurate measurement of the resistance value of the sensor with 100g weight, the resistor value for a balance bridge was determined to be approximately 8.8kΩ. As shown in the Figure 2, our actual resistor values were 8.83kΩ and 8.85kΩ.

3.2 Implementing the Amplifier

3.2.1 Measuring V_{out} of Wheatstone Bridge to Determine Gain

Following the determination of the bridge resistance values, the output voltage (V_{out}) of the circuit was measured. An initial load of 100 g was applied to one sensor, while the load on the second sensor was incrementally adjusted to identify a range of usable weights. Table 1 presents the results of these measurements with a supply voltage (V_{cc}) of 5 V. In Table 2, the supply voltage was increased to 10 V, incorporating the pre-designed amplifier stage to achieve approximately 80% of the Full-Scale Output (OFS).

Table 1 can be used to estimate the input full-scale (IFS) range of the sensor. Distinct output voltage values are observed for the weights tested between 100g and 600g, indicating that this range lies within the operating region of the sensor. Figure 5, shown later in this report, includes additional measurements below 100g.

Although additional data points would be required to determine the exact full-scale input of the sensor, the measurements collected in this experiment suggest that the sensor is capable of reliably detecting weights from approximately 20g up to at least 600g. Further testing beyond this range would be necessary to determine the true upper limit of the sensor's input full scale.

Mass	Measurement 1	Measurement 2
100g	-0.48V	-0.48V
110g	-0.05V	-0.02V
120g	0.14V	0.15V
200g	1.10V	1.14V
300g	2.01V	2.08V
600g	3.33V	3.36V

Table 1: Mass Vs. V_{out} of WheatStone Bridge to Calibrate Amplifiers

3.2.2 Designing The Instrumentation Amplifier

The gain of the instrumentation amplifier, A_v, was determined using the transfer function:

$$A_v = \frac{V_{out}}{V_2 - V_1} = \left(1 + \frac{2R_1}{R_{gain}}\right)\left(\frac{R_3}{R_2}\right) \tag{1}$$

Resistor values were selected as $R_1 = 10$ kΩ, $R_2 = 10$ kΩ, $R_3 = 20$ kΩ, and $R_{gain} = 20$ kΩ. Substituting these values into (1) yielded a total system gain of 4.

A first-order passive low-pass filter (LPF) was implemented at the output stage to mitigate 60 Hz power line interference. Utilizing a resistor value of 10 kΩ and a capacitor of 0.22 μF, the resulting cut-off frequency (f_c) was established at 72.3 Hz. This specific configuration was selected based on the availability of laboratory components while maintaining a target frequency range near the noise threshold.

The upper bound of a reasonable cut-off frequency is constrained by the required bandwidth of the primary signal; f_c must remain sufficiently high to prevent attenuation or phase distortion of the measured data. Conversely, the lower bound is dictated by the necessity of 60 Hz noise suppression and the acceptable system response time. While the implemented 72.3 Hz cut-off ensures signal integrity with minimal distortion, it provides a moderate attenuation of approximately -2.3 dB at the 60 Hz interference frequency. Achieving higher noise rejection would necessitate a lower f_c, albeit at the cost of an increased time constant and a slower system settling time.

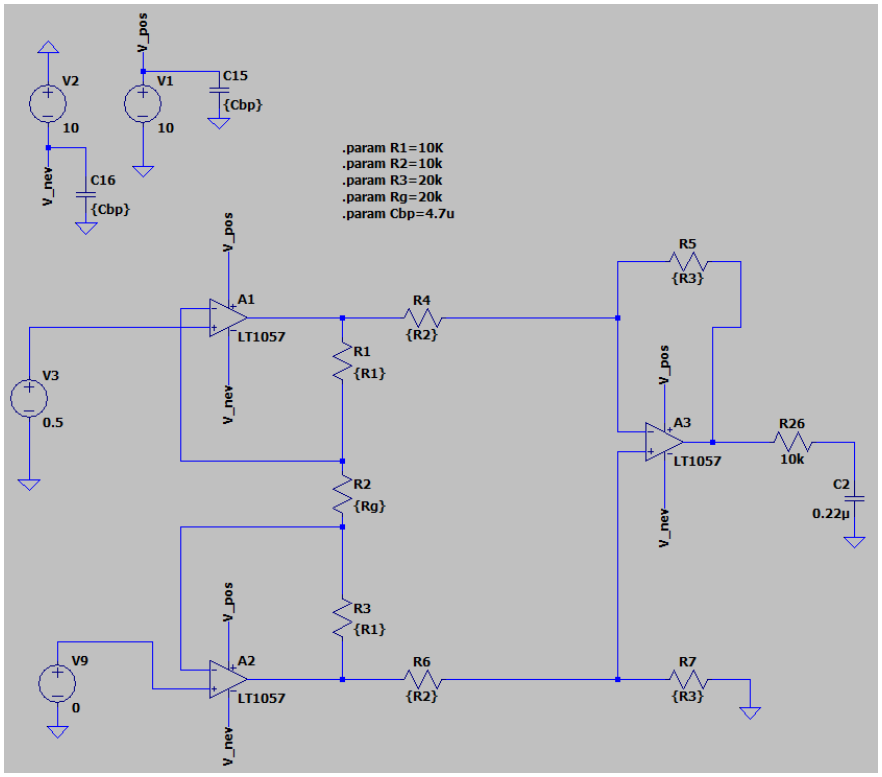

Figure 3: Instrumentation Amplifier Simulation in LTSpice.

Mass	Measurement 1	Measurement 2
20g	-7.93V	-7.93V
50g	-5.20V	-5.04V
100g	1.27V	1.22V
150g	0.20V	0.30V
200g	1.32V	1.42V
300g	3.15V	3.24V
500g	5.78V	5.95V
600g	6.10V	6.37V

Table 2: Amplifier Mass Vs. V_{out} (22.8$^{\circ}C$) ($V_{cc} = \pm 10v$)

The selection of an instrumentation amplifier architecture over a standard differential amplifier provides distinct advantages in terms of Common-Mode Rejection Ratio (CMRR) stability and gain flexibility. Unlike a differential configuration, where noise rejection is highly dependent on the precise matching of four external resistors, the instrumentation amplifier maintains a high CMRR that is less sensitive to external component tolerances. Furthermore, this architecture facilitates gain adjustment through a single resistor (R_{gain}), whereas a differential amplifier requires the simultaneous modification of matched resistor pairs to maintain bridge balance. In this implementation, the total gain of 4 was distributed equally across the two stages: the input stage provided a gain of 2, calculated by $(1+2R_1/R_{gain})$, and the output stage provided a gain of 2, determined by the ratio R_3/R_2. This balanced distribution was utilized to enhance the Signal-to-Noise Ratio (SNR) by amplifying the differential signal at the primary stage while ensuring the output stage remained within a linear operating range, successfully achieving the target 80% Full-Scale Output (OFS) without introducing significant offset errors.

3.3 Creating a Calibration Curve

Figure 4 shows the relationship between the weights placed on the sensor and the corresponding output voltage. By connecting the measured data points, an approximate calibration curve can be developed. This calibration curve represents how the sensor's electrical output changes as increasing force is applied to the sensor. In this experiment, the applied force is represented by the weight placed on the sensor.

It can be observed that the calibration curve is not perfectly linear across the entire measurement range. As the weight on the sensor increases, the rate of change in output voltage begins to plateau. For example, the difference in output between 500g and 600g is relatively small, whereas the difference between 20g and 100g is much larger.

This calibration curve provides insight into the operating limits and sensitivity of the sensor. It also allows for estimation of the applied force based on the measured output voltage. For instance, the curve appears relatively linear between approximately 20g and 100g. Between 100g and 500g, the response remains approximately linear but with a shallower slope compared to the lower range. Using this information, the sensor output can be measured and used to estimate the corresponding applied weight within these ranges.

The equation for calculating sensitivity is shown below:

$$S = \frac{\Delta V_{out}}{\Delta m} \tag{2}$$

As stated previously, there are two intervals at which the calibration curve is relatively linear. These are from 20 g to 100 g and from 100 g to 500 g. The sensitivity was calculated for both of these intervals. For interval 1 (20-100 g), it is 114.7mV/g. For interval 2 (100-500 g) it is 11.6mV/g.

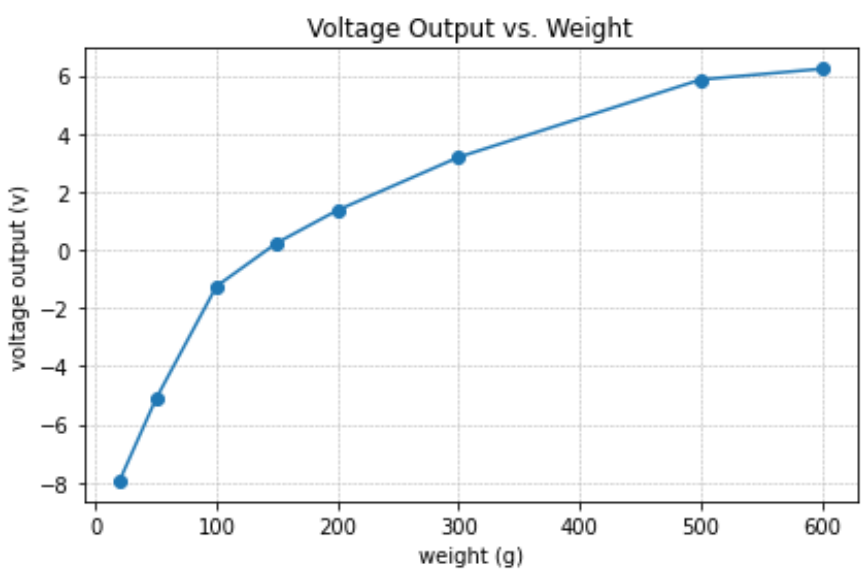

Figure 4: Calibration curve.

3.4 Temperature Coefficient and Quarter Wheatstone Bridge

The temperature coefficient describes how the output of a sensor changes as the ambient temperature varies. Many electrical components, including strain gauges and sensors in a Wheatstone bridge, exhibit temperature-dependent behavior because the electrical resistance of their materials changes with temperature. As a result, even if the applied force on the sensor remains constant, the measured output voltage may drift as the temperature changes. The temperature coefficient provides a quantitative measure of this effect by relating the change in output voltage to the change in temperature.

To determine the temperature coefficient for the sensor used in this experiment, the output voltage of the Wheatstone bridge was recorded at several different temperatures while the applied load remained

constant. A linear regression was then performed on the measured voltage versus temperature data to determine the slope of the best-fit line, which represents the rate of change of output voltage with respect to temperature ($\frac{dV_{out}}{dT}$). This slope was then normalized by the bridge excitation voltage, or supply voltage, to compute the temperature coefficient using the relationship shown in Equation (1). The resulting value indicates how sensitive the sensor output is to temperature variations.

$$TC = \frac{1}{V_{exc}} \frac{dV_{out}}{dT} \tag{3}$$

The data from the 100 g column in Table 3 was used to calculate the temperature coefficient. Using the Python code provided in the appendix of this document, the following values were calculated:

$$\text{Temperature Coefficient (1/°C)} = 0.00699$$
$$\text{Temperature Coefficient (ppm/°C)} = 6992$$

Calculating the temperature coefficient is important because it allows the temperature-induced drift of the sensor to be quantified. This information can be used to evaluate the stability and accuracy of the sensor in environments where temperature changes may occur. If the temperature coefficient is large, the sensor output may require compensation or calibration adjustments to ensure accurate measurements. Therefore, determining the temperature coefficient helps assess the reliability of the sensor and provides insight into how temperature variations may influence measurement results.

100g		200g		300g	
Temp	Voltage	Temp	Voltage	Temp	Voltage
$22°C$	-1.30V	$28°C$	1.40V	$28.9°C$	3.90V
$26.8°C$	-0.95V	$35°C$	1.40V	$34.1°C$	4.22V
$32°C$	-0.88V	$36°C$	1.44V	$35.5°C$	4.33V
$33°C$	-0.86V	$37°C$	1.49V	$37°C$	4.38V
$34°C$	-0.82V	$38°C$	1.52V	$38°C$	4.4V
$36.4°C$	-0.73V				
$37.3°C$	-0.72V				
$38.3°C$	-0.65V				

Table 3: Quarter Wheatstone Bridge Measuring Mass Vs. V_{out} as Temp Increases

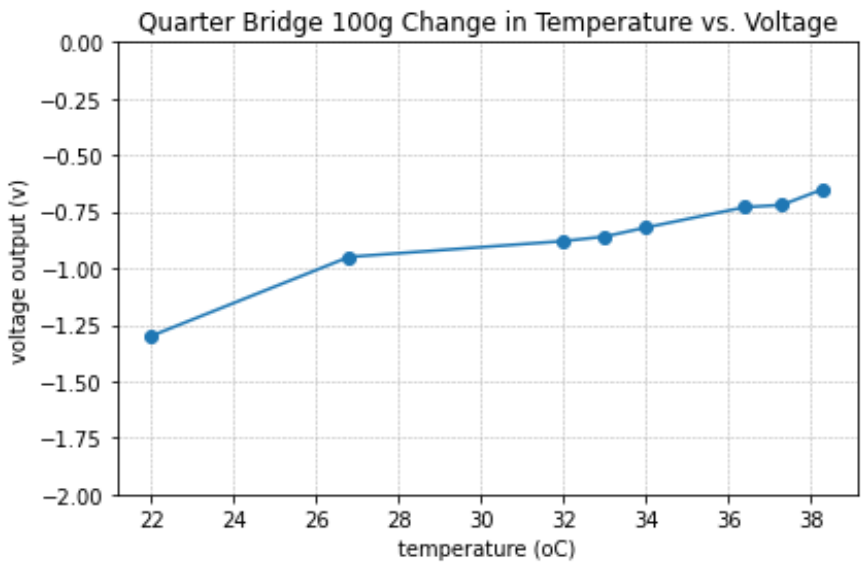

Figure 5: V_{out} of quarter bridge as temperature changes with 100g weight on sensor.

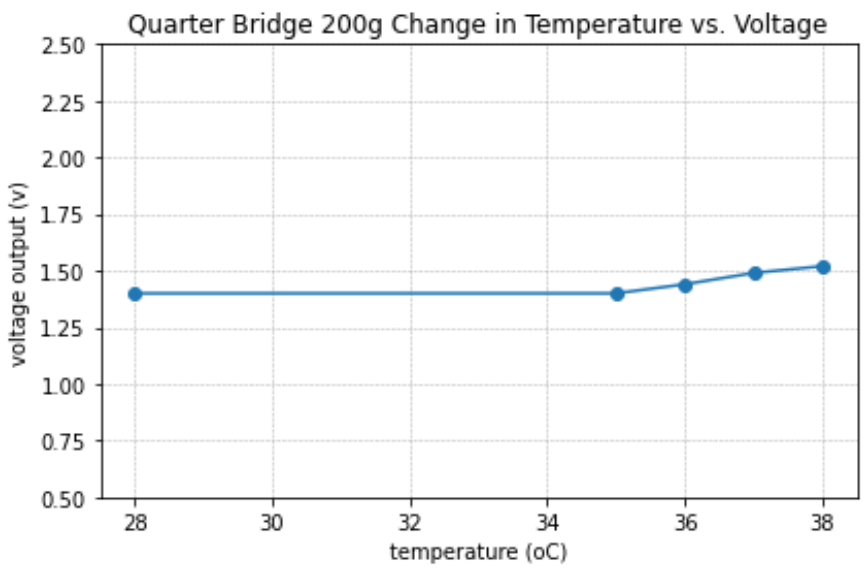

Figure 6: V_{out} of quarter bridge as temperature changes with 200g weight on sensor.

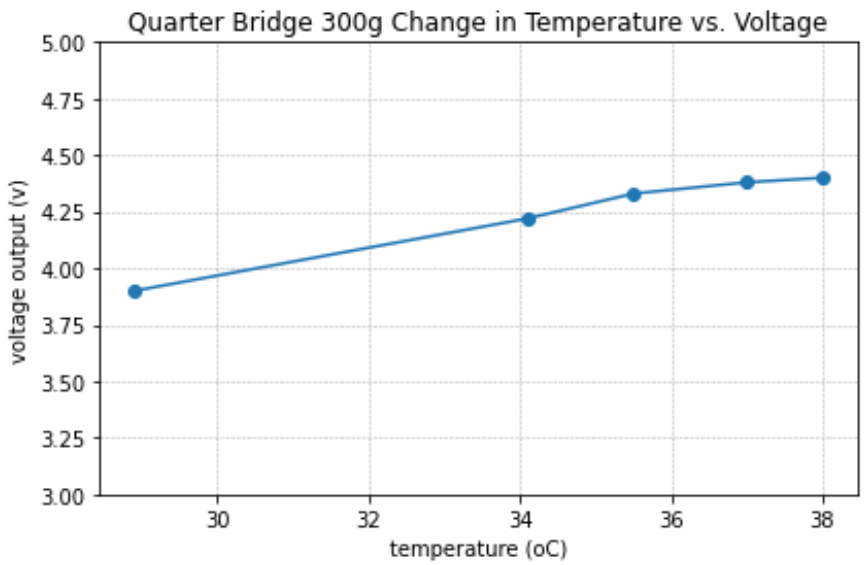

Figure 7: V_{out} of quarter bridge as temperature changes with 300g weight on sensor.

3.5 CMRR of The Sensor System

The total Common-Mode Rejection Ratio ($CMRR_{total}$) of the instrumentation amplifier is determined by both the resistor tolerances and the internal CMRR of the operational amplifiers. Given the resistor values $R_1 = 10$ kΩ, $R_2 = 10$ kΩ, $R_3 = 20$ kΩ, and $R_{gain} = 20$ kΩ, the differential gains for the first and second stages are $A_{d1} = 1 + \frac{2R_3}{R_{gain}} = 3$ and $A_{d2} = \frac{R_2}{R_1} = 1$, respectively. For a worst-case resistor tolerance of $\delta = 0.05$ (5%), the CMRR due to resistor mismatch is calculated as:

$$CMRR_{res} = A_{d1} \cdot \left(\frac{1 + A_{d2}}{4\delta}\right) = 3 \cdot \left(\frac{1+1}{4 \times 0.05}\right) = 30 \implies 20\log_{10}(30) \approx 29.54 \text{ dB}$$

To account for a non-ideal op-amp with an internal $CMRR_{amp} = 80$ dB (linear ratio of $10,000$), the total system CMRR is determined by the reciprocal sum of the linear components:

$$\frac{1}{CMRR_{total}} = \frac{1}{CMRR_{res}} + \frac{1}{CMRR_{amp}} = \frac{1}{30} + \frac{1}{10,000} \approx 0.03343$$

$$CMRR_{total(dB)} = 20\log_{10}\left(\frac{1}{0.03343}\right) \approx 29.52 \text{ dB}$$

This result indicates that the system's ability to reject common-mode signals is heavily dominated by the 5% resistor tolerance, rendering the high internal CMRR of the op-amp virtually negligible in this specific configuration.

The experimental performance of the bridge and instrumentation amplifier assembly under a 30 Hz sinusoidal common-mode input is summarized in Table 4. The Common-Mode Rejection Ratio (CMRR) was derived by evaluating the residual output voltage against the input peak-to-peak magnitudes. The results indicate a stable rejection characteristic, maintaining a CMRR of approximately 52 dB across the 1 V to 4 V range.

3.6 Resolution of the System

Theoretical Resolution

Theoretically, the output of the amplifier is infinitesimal, however, realistically the resolution is more limited. Two factors that limit the resolution include the instability of the sensor's resistance value and tolerances of

V_{pk-pk}	Output	CMRR (dB)
$1V_{pk-pk}$	9mV	50.46dB
$2V_{pk-pk}$	16mV	51.48dB
$3V_{pk-pk}$	22mV	52.24dB
$4V_{pk-pk}$	30mV	52.04dB

Table 4: 30Hz Sinusoid Input and The Calculated CMMR

the components in our amplification circuit. It has been consistently observed that small variations with the position of the weight on the sensor can have an impact of +/- 5kΩ. To help address this, the metal pad was secured to the sensor with electric tape outlined the area to place the weight each time. The tolerances of the components in our amplifier circuit also create a degree of uncertainty with the output. Variations in resistor values and internal components of the op-amps will affect the output of the circuit. In simulation, conditions and components are ideal. However, this is not the case in real world application.

Limiting Factors

1. **Resistor Tolerance:** The $\pm 5\%$ tolerance of the resistors limits the CMRR (calculated at ≈ 29.5 dB), creating a noise floor that masks small differential signals.
2. **Positional Sensitivity:** Variations in the weight placement on the sensor introduce resistance fluctuations of ± 5 kΩ, introducing mechanical uncertainty that exceeds the electrical resolution.

ADC and Force Resolution Calculation

Given a 12-bit ADC utilizing 70% of a 5 V full-scale range, the voltage resolution (V_{LSB}) is:

$$V_{LSB} = \frac{5 \text{ V} \times 0.70}{2^{12}} = \frac{3.5 \text{ V}}{4096} \approx 0.8545 \text{ mV}$$

Using experimental data for 50 g and 55 g masses ($V_{50g} = -4.794$ V and $V_{55g} = -4.680$ V), the system sensitivity (S) is:

$$S = \frac{|-4.680 \text{ V} - (-4.794 \text{ V})|}{0.005 \text{ kg}} = 22.8 \text{ V/kg}$$

The mass resolution is thus:

$$\Delta m = \frac{V_{LSB}}{S} = \frac{0.8545 \text{ mV}}{22.8 \text{ V/kg}} \approx 3.75 \times 10^{-5} \text{ kg (or } 37.5 \text{ mg)}$$

Applying the acceleration due to gravity ($g \approx 9.81$ m/s^2), the force resolution is:

$$\Delta F = \Delta m \cdot g \approx 3.75 \times 10^{-5} \text{ kg} \cdot 9.81 \text{ m/s}^2 \approx 0.368 \text{ mN}$$

3.6.1 Minimal Weight Comparison

The statistical performance of the sensor system was evaluated by calculating the mean (μ) and standard deviation (σ) for each mass increment across ten trials. For the 1g comparison (Table 5), the 50g and 51g loads yielded $\mu_{50} = -5.065$V ($\sigma = 0.170$V) and $\mu_{51} = -5.044$V ($\sigma = 0.182$V), respectively. For the 5g comparison (Table 6), the 50g and 55g loads yielded $\mu_{50} = -4.794$ V ($\sigma = 0.075$V) and $\mu_{55} = -4.676$V ($\sigma = 0.052$ V).

Measurement confidence is determined by the signal-to-noise ratio relative to the mass increments. There is low confidence in the ability to accurately resolve a 1g difference, as the mean voltage shift ($\Delta V \approx 21$mV) is significantly smaller than the standard deviation ($\sigma \approx 180$mV), causing the data distributions to overlap entirely. Conversely, there is higher confidence in measuring a 5g difference, as the voltage shift ($\Delta V \approx 118$mV) exceeds the standard deviation of the samples. However, despite the improved clarity at 5g, the inherent system variance suggests that single-sample measurements remain susceptible to error without further signal conditioning or averaging.

Attempt	Mass	Voltage
1	50g	-5.25V
	51g	-5.25V
2	50g	-5.19V
	51g	-5.25V
3	50g	-5.23V
	51g	-5.20V
4	50g	-5.20V
	51g	-5.13V
5	50g	-5.13V
	51g	-5.06V
6	50g	-5.06V
	51g	-5.06V
7	50g	-5.07V
	51g	-5.07V
8	50g	-4.92V
	51g	-4.88V
9	50g	-4.80V
	51g	-4.74V
10	50g	-4.80V
	51g	-4.80V

Table 5: 50g Vs. 51g V_{out} Comparision

3.7 Half Bridge Implementation

As specified in Table 7, the circuit from Figure 1 was integrated into a half-bridge configuration to evaluate its thermal stability. In contrast to the results in Table 3, the output voltage remained relatively constant despite a simultaneous temperature increase across both sensors. This stability is attributed to the inherent temperature compensation of the half-bridge topology, where matched thermal effects in adjacent bridge arms effectively cancel, rendering the output independent of common-mode thermal variations. Minor fluctuations present in the dataset are likely the result of experimental noise and minor inconsistencies in manual handling rather than a shift in the electrical equilibrium of the bridge.

Attempt	Mass	Voltage
1	50g	-4.83V
	55g	-4.71V
2	50g	-4.84V
	55g	-4.73V
3	50g	-4.85V
	55g	-4.62V
4	50g	-4.89V
	55g	-4.73V
5	50g	-4.89V
	55g	-4.73V
6	50g	-4.75V
	55g	-4.72V
7	50g	-4.68V
	55g	-4.61V
8	50g	-4.71V
	55g	-4.64V
9	50g	-4.75V
	55g	-4.65V
10	50g	-4.75V
	55g	-4.62V

Table 6: 50g Vs. 55g V_{out} Comparision

100 g		200 g		300 g	
Temp	Voltage	Temp	Voltage	Temp	Voltage
$25°C$	-1.47V	$27°C$	1.41V	$27°C$	3.51V
$34.9°C$	-1.42V	$31°C$	1.38V	$33°C$	3.50V
$35°C$	-1.42V	$34°C$	1.33V	$34.5°C$	3.72V
$36°C$	-1.46V	$35°C$	1.32V	$36°C$	3.71V
$37°C$	-1.45V	$37°C$	1.36V	$38°C$	3.64V
$38°C$	-1.52V				

Table 7: Half Bridge: Measuring Mass Vs. V_{out} as Temp Increases

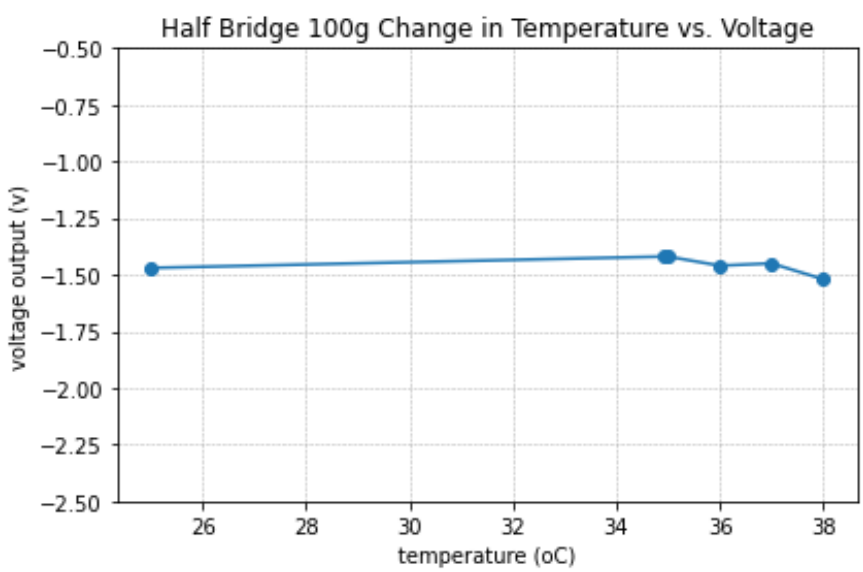

Figure 8: V_{out} of the half bridge as temperature changes with 100g weight on sensor.

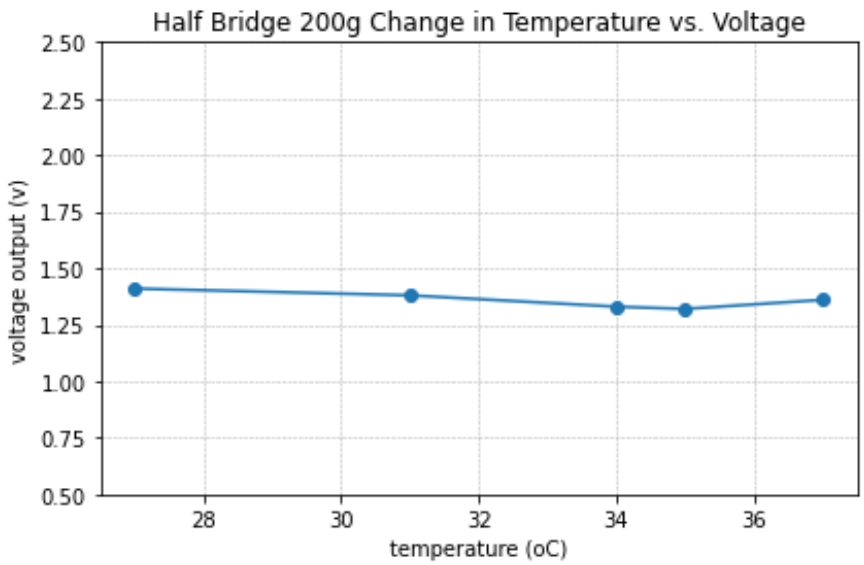

Figure 9: V_{out} of the half bridge as temperature changes with 200g weight on sensor.

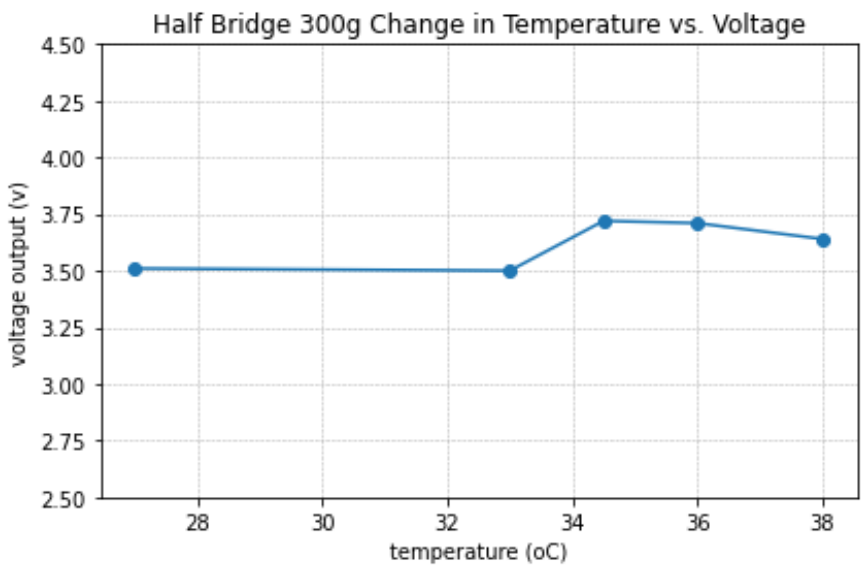

Figure 10: V_{out} of the half bridge as temperature changes with 300g weight on sensor.

4 Conclusion

The objective of this experiment was to design and evaluate a force measurement system using a Wheatstone bridge, a force sensor, and an amplifier. The system was constructed by integrating a force sensor into a bridge configuration and amplifying the resulting differential voltage to obtain a measurable output. Calibration measurements were performed using known masses in order to characterize the relationship between applied force and the resulting output voltage.

The experimental results demonstrate that the Wheatstone bridge configuration is capable of detecting resistance changes produced by the force sensor and converting them into a measurable voltage signal. The instrumentation amplifier successfully increased the magnitude of this signal while maintaining a rea-

sonable level of common-mode noise rejection. The generated calibration curve showed that the sensor output varies with applied weight, although the relationship was not perfectly linear across the entire measurement range. The sensor response was observed to be relatively linear over certain ranges, and the output began to plateau when the applies mass was 500 g and 600 g.

Temperature effects were also investigated to evaluate the stability of the measurement system. When a quarter-bridge configuration was used, the output voltage changed noticeably as the temperature increased, resulting in a measured temperature coefficient of approximately $0.00699\,(1/°C)$ or $6992\,\text{ppm}/°C$. This result indicates that temperature variations can significantly influence the sensor output when only a single sensing element is used, or in the case of a half-bridge when only one sensor is experiencing a variation in temperature. When in the half-bridge configuration with both sensor experiencing a similar change in temperature, the output voltage remained much more stable. This demonstrates the effectiveness of the half-bridge configuration in compensating for temperature-induced resistance changes.

Additional performance metrics were evaluated to better understand the limitations of the system. The experimental measurements showed that the instrumentation amplifier provided a common-mode rejection ratio of approximately 52 dB, indicating moderate rejection of common-mode signals. The effective measurement resolution was also investigated by comparing small differences in applied mass. The results showed that the system could not reliably distinguish a 1 g difference due to measurement noise and system variability, but a 5 g difference produced a more discernible change in the output voltage.

Overall, the experiment demonstrated the practical implementation of a Wheatstone bridge measurement system and highlighted several important factors that influence sensor performance, including temperature drift, amplifier design, and system noise. While the system was able to detect changes in applied force, the results also showed that measurement accuracy is limited by sensor placement sensitivity, component tolerances, and environmental conditions. Future improvements could include the use of precision resistors with lower tolerances, improved mechanical mounting of the sensor to reduce positional variability, and additional filtering or signal averaging to improve measurement resolution.

If the force sensor used in this experiment were replaced with a strain gauge, several adjustments to the system design would be required. Strain gauges typically produce extremely small resistance changes, often on the order of a few milliohms, which would require higher gain and improved noise rejection in the amplification stage. The bridge would likely remain in a quarter-bridge or half-bridge configuration, but careful resistor matching and temperature compensation would become even more important. In addition, the mechanical mounting of the strain gauge would need to be carefully designed so that the applied strain is transferred effectively to the sensing element without introducing additional mechanical noise.

Instead of relying solely on passive temperature compensation through a half-bridge configuration, an active feedback system could also be used to maintain a balanced bridge. In this approach, one resistor in the bridge, such as R_0, could be implemented as a voltage-controlled resistor. The differential output voltage of the bridge would be monitored and fed back into a control circuit. If the bridge becomes unbalanced and the differential voltage deviates from zero, the control system would adjust the resistance of R_0 until the bridge returns to a balanced condition. In this configuration, the feedback signal would be a control voltage derived from the measured differential output of the bridge. A simple implementation could involve an operational amplifier configured as an error amplifier that drives a voltage-controlled resistor element, such as a field-effect transistor operating in its linear region or a digital potentiometer controlled by a microcontroller.

In situations where temperature compensation is only approximate, additional environmental control may be necessary. For example, if a temperature-compensating resistor $R_{\Delta T}$ is designed to match the strain gauge only for temperatures below $50°$C but the surrounding industrial environment reaches $80°$C, the sensing system could be placed inside a thermally conductive enclosure with an internal temperature regulation system. A thermistor could be used to continuously monitor the internal temperature of the enclosure. If the temperature approaches a predetermined threshold, such as $45°$C, a cooling mechanism could be activated to maintain the internal temperature within the desired operating range. This cooling system could consist of a small fan, heat sink, or thermoelectric cooler controlled through a feedback loop. By maintaining a stable internal temperature, the bridge circuit would remain within the temperature range where the compensation resistor accurately tracks the strain gauge, thereby helping to maintain bridge balance and improve measurement stability.

5 Appendix

```python

import numpy as np
import matplotlib.pyplot as plt

# recorded data
temperature = np.array([22, 26.8, 32, 33, 34, 36.4, 37.3, 38.3])            # Celsius
vout = np.array([-1.3, -0.95, -0.88, -0.86, -0.82, -0.73, -0.72, -0.65])    # volts

# linear line of best fit
slope, intercept = np.polyfit(temperature, vout, 1)

# reference voltage
V0 = 5          # voltage supplying the bridge circuit

# temperature coefficient
alpha = slope / V0

print("Slope (dV/dT):", slope)
print("Temperature Coefficient (1/C):", alpha)
print("Temperature Coefficient (ppm/C):", alpha * 1e6)

# plot
plt.scatter(temperature, vout, label="Measured Data")
plt.plot(temperature, slope*temperature + intercept, label="Linear Fit")

plt.xlabel("Temperature (C)")
plt.ylabel("Bridge Output Voltage (V)")
plt.grid(True)
plt.legend()
plt.show()
```