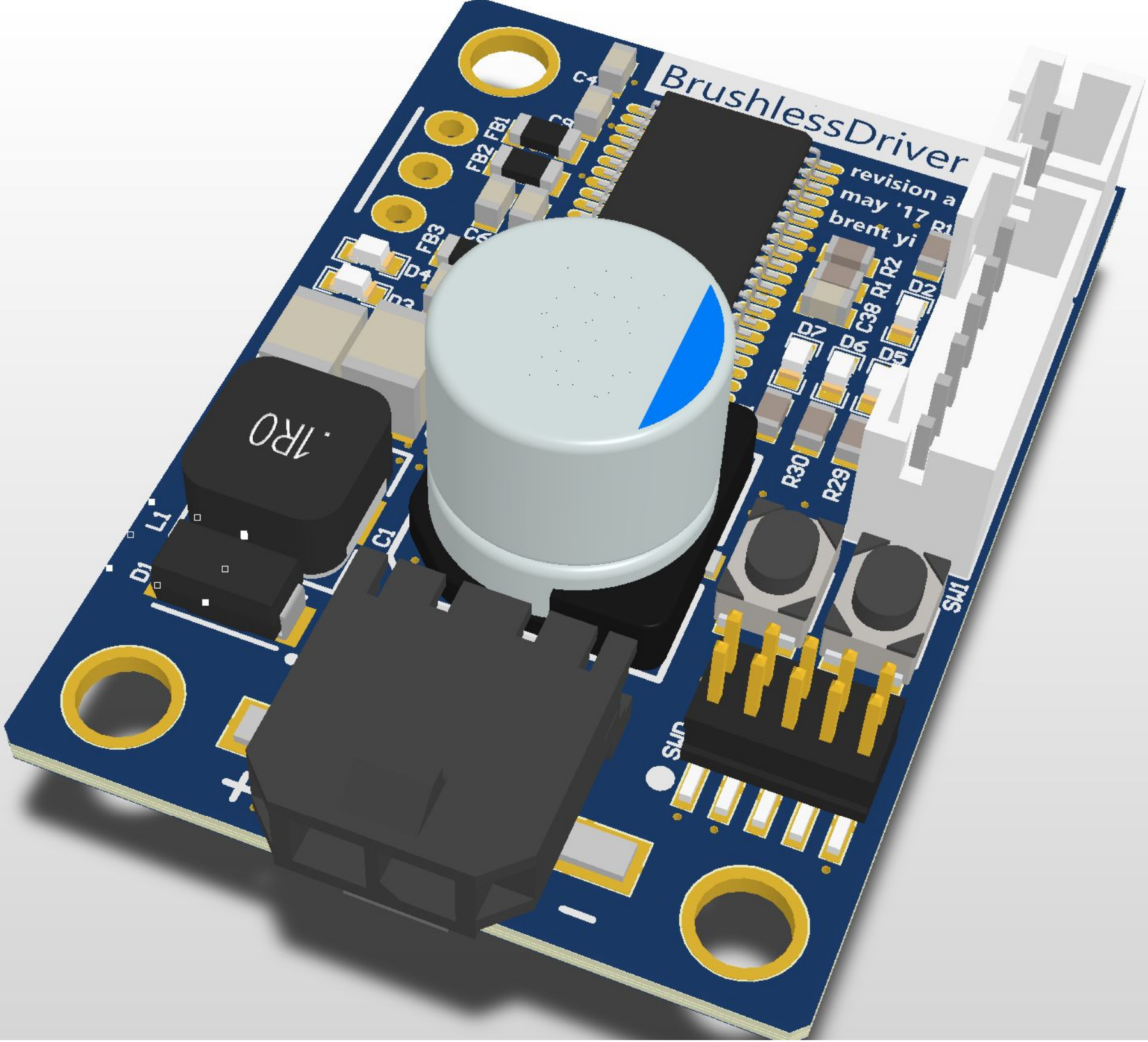
BrushlessDriver
revision a
may '17
brent yi
C4
FB1
FB2
FB3
D4
D3
C1
L1
D1
.1R0
R1
R2
C38
D2
D7
D6
D5
R30
R29
SW1
UTS
+
-

BrushlessDriver
revision a
may '17
brent yi
C4
C9
FB1
FB2
C6
C10
FB3
D4
D3
C8
C11
U1
R16
R2
R1
C38
D2
D7
D6
D5
R31
R30
R29
SW2
SW1
C23
C21
C1
.1R0
L1
D1
SWD
+
−

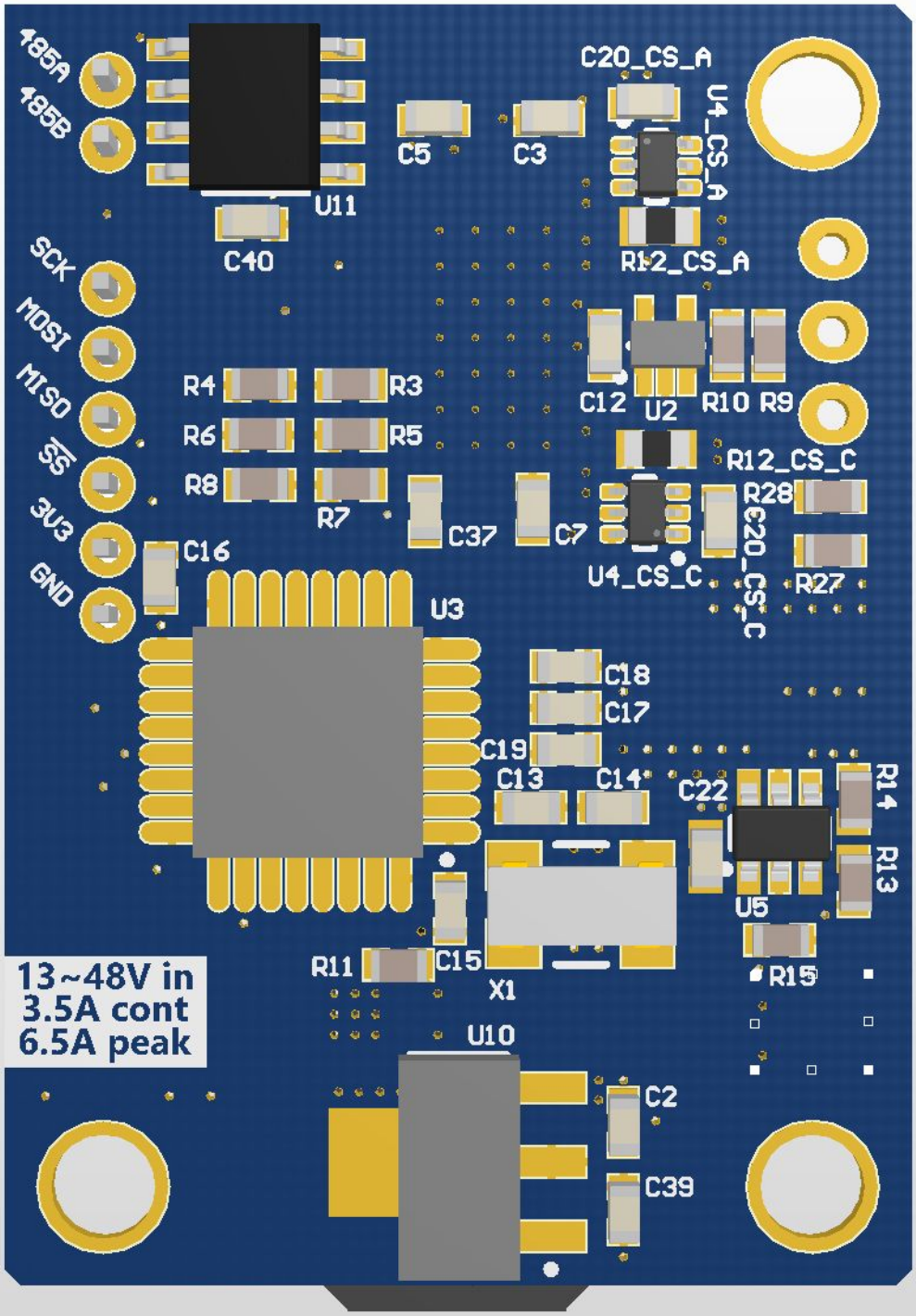
485A
485B
SCK
MOSI
MISO
SS
3V3
GND
U11
C40
C5
C3
C20_CS_A
U4_CS_A
R12_CS_A
C12
U2
R10
R9
R4
R3
R6
R5
R8
R7
C37
C7
R12_CS_C
R28
C20_CS_C
U4_CS_C
R27
C16
U3
C18
C17
C19
C13
C14
C22
R14
R13
U5
R15
R11
C15
X1
U10
C2
C39
13~48V in
3.5A cont
6.5A peak

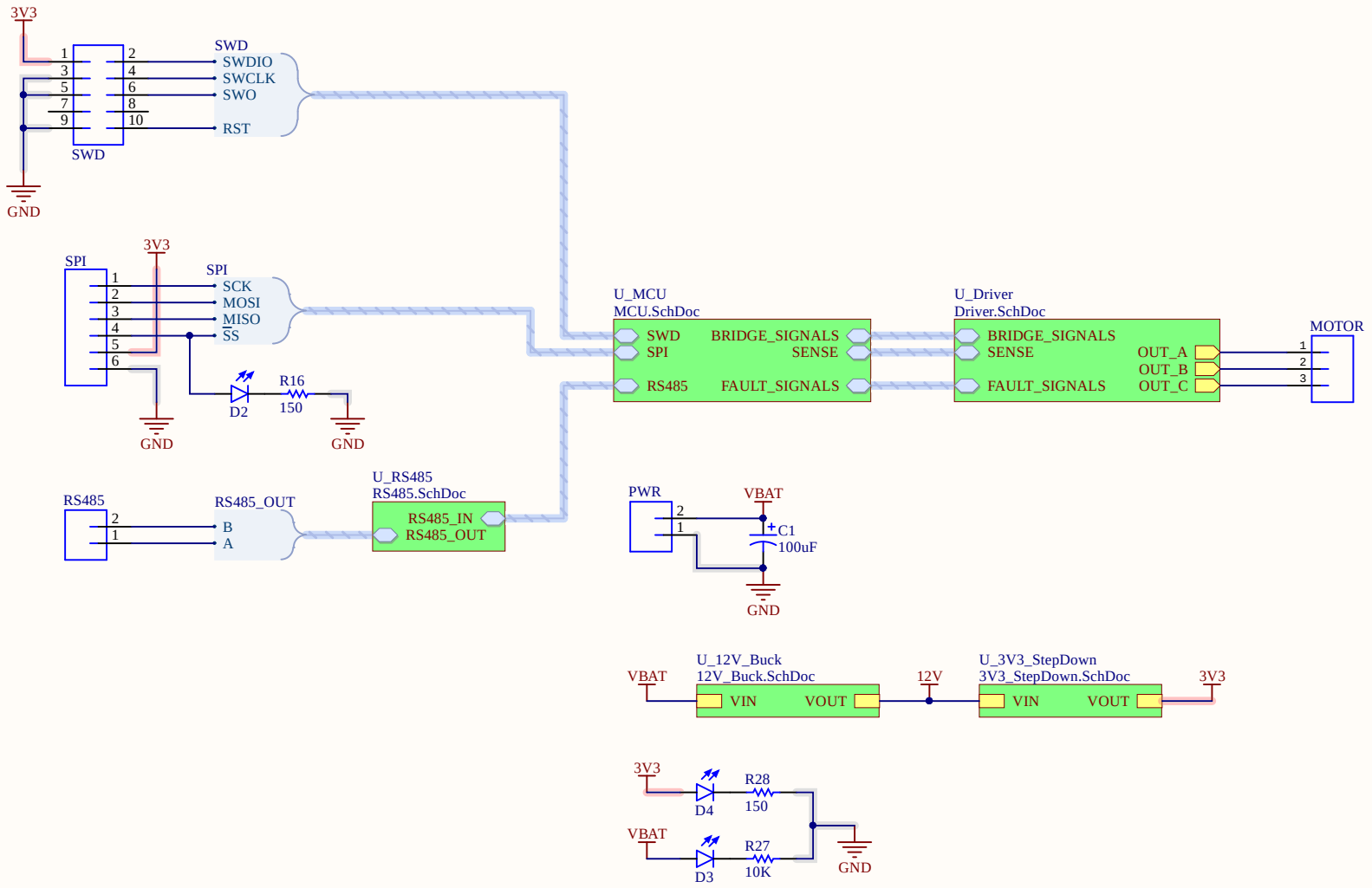

Title		
Brushless Driver, 48V Max, 3.5A Continuous		
Size: A	Number: XXXXXX	Revision: A
Date: 6/7/2017		Sheet 1 of 8
File: C:\Users\..\BrushlessDriver.SchDoc		Drawn By: Brent

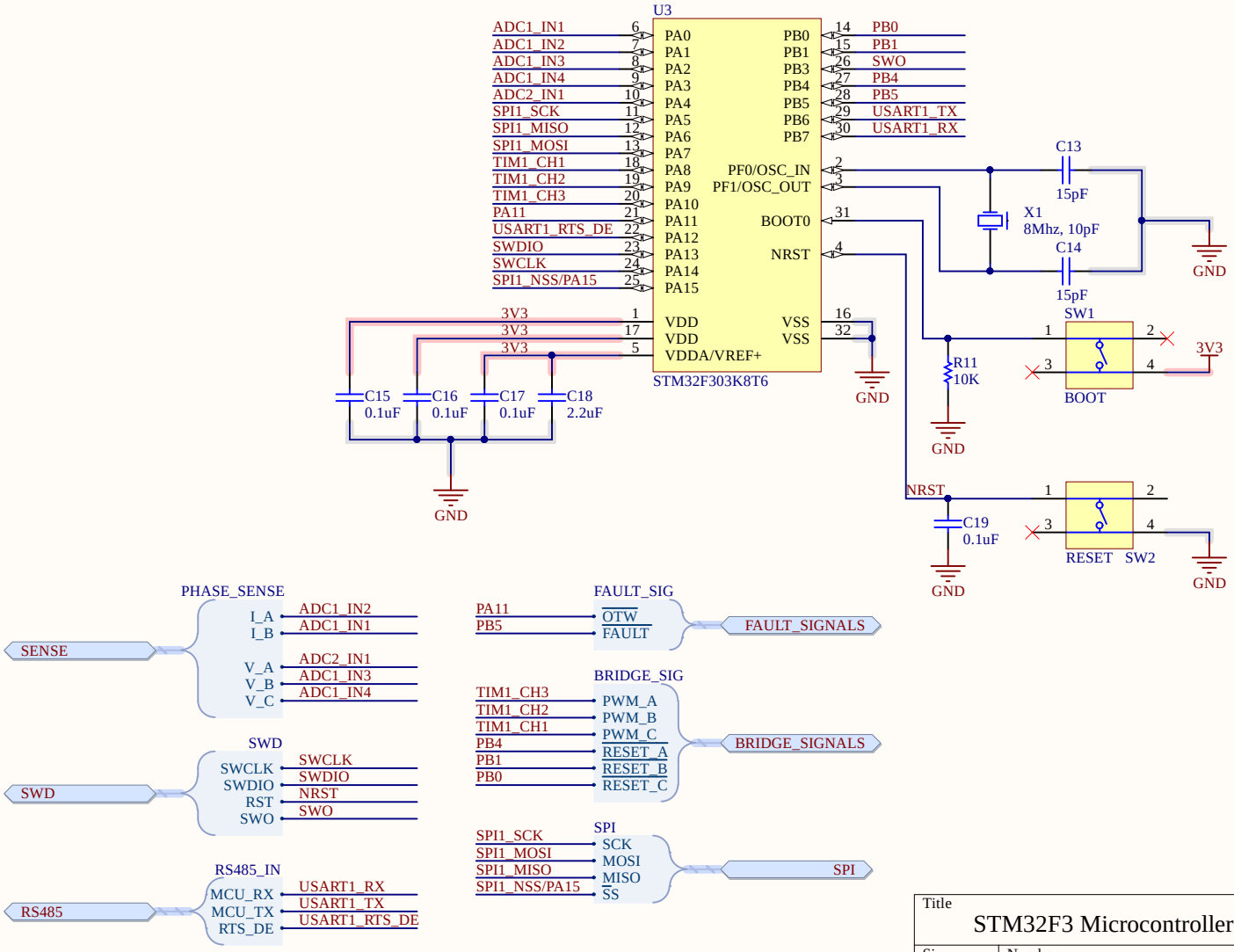

Title		
STM32F3 Microcontroller		
Size: A	Number: XXXXXX	Revision: A
Date: 6/7/2017	Sheet 2of 8	
File: C:\Users\..\MCU.SchDoc	Drawn By: Brent	

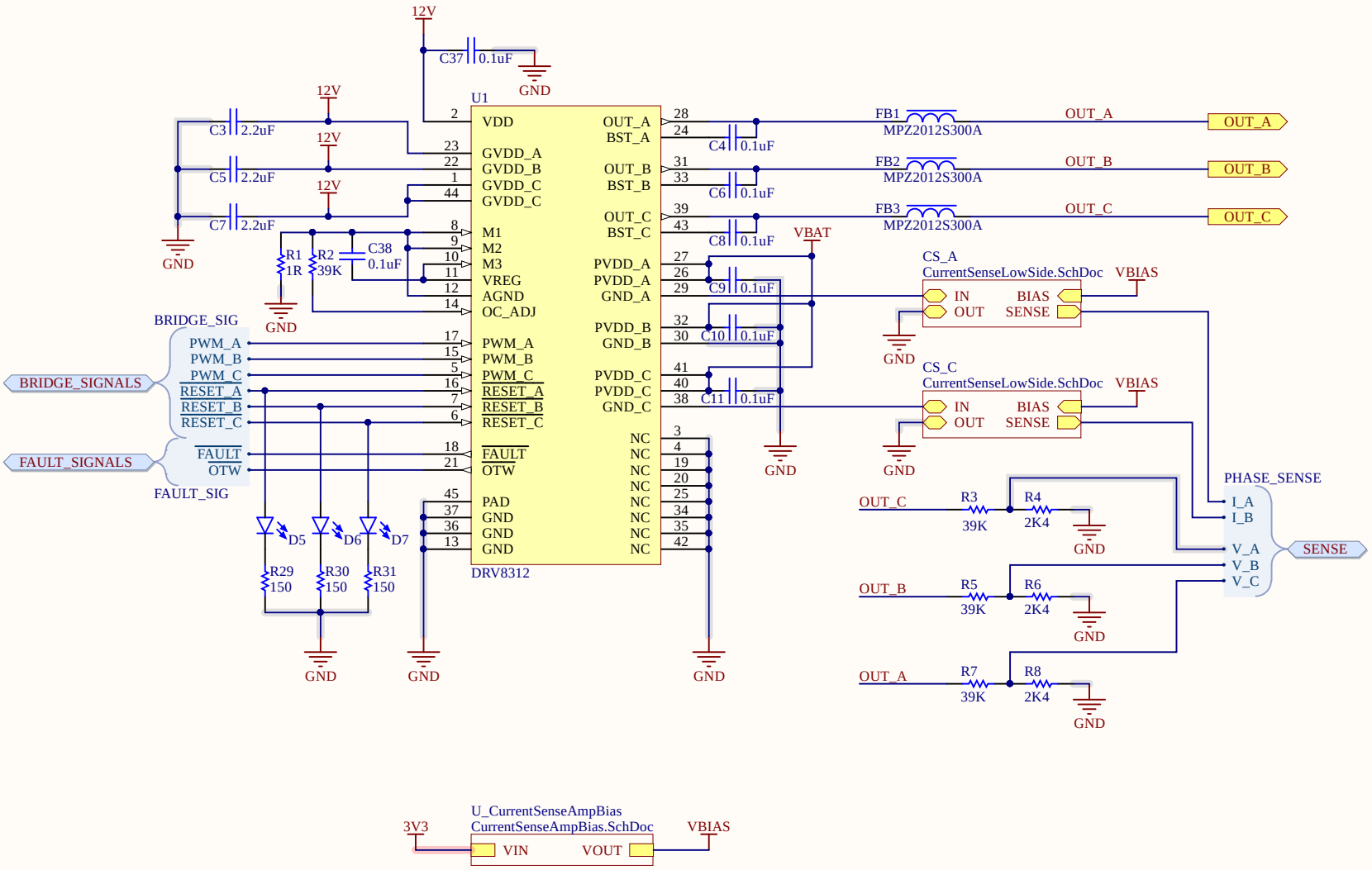

Title		
Driver		
Size: A	Number: XXXXXX	Revision: A
Date: 6/7/2017		Sheet 3 of 8
File: C:\Users\..\Driver.SchDoc		Drawn By: Brent

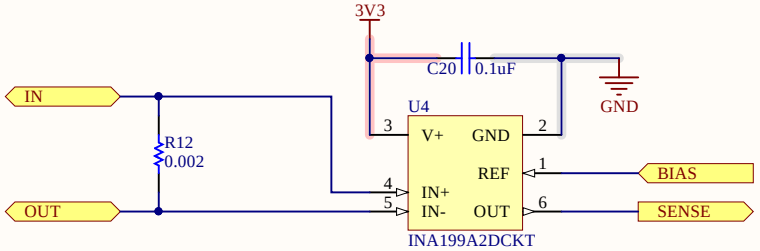

Title	Low-Side Phase Current Sense	
Size A	Number XXXXXX	Revision A
Date: 6/7/2017		Sheet 4 of 8
File: C:\Users\..\CurrentSenseLowSide.SchDoc		Drawn By: Brent

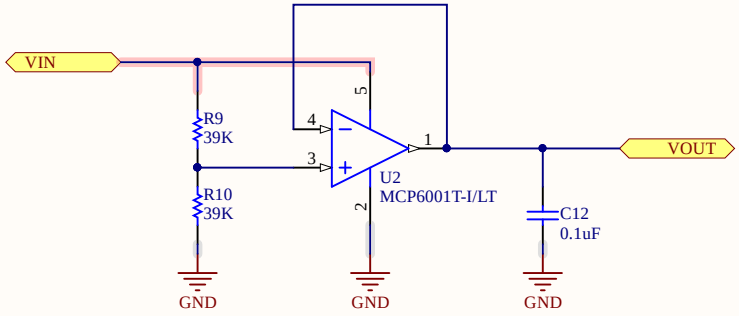

Title: Current Sense Amplifier Bias Voltage		
Size: A	Number: XXXXXX	Revision: A
Date: 6/7/2017		Sheet 5 of 8
File: C:\Users\..\CurrentSenseAmpBias.SchDoc		Drawn By: Brent

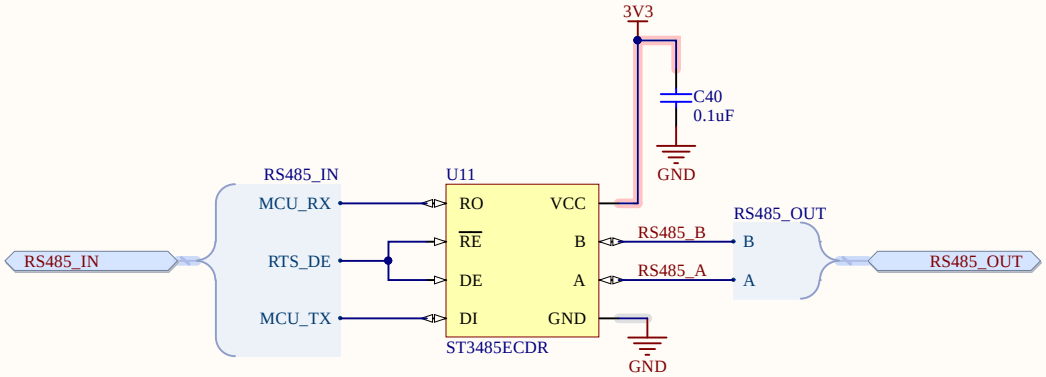

Title RS485		
Size A	Number XXXXXX	Revision A
Date: 6/7/2017		Sheet 6 of 8
File: C:\Users\..\RS485.SchDoc		Drawn By: Brent

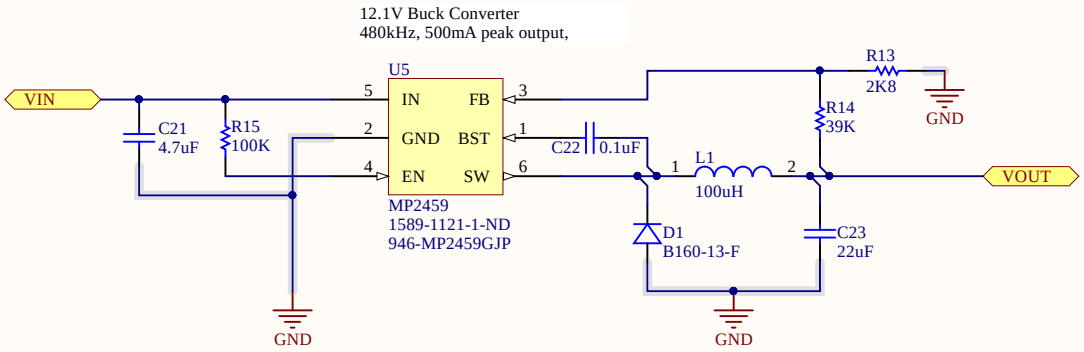

Title		
12.1V Buck Converter		
Size: A	Number: XXXXXX	Revision: A
Date: 6/7/2017		Sheet 7 of 8
File: C:\Users\..\12V_Buck.SchDoc		Drawn By: Brent

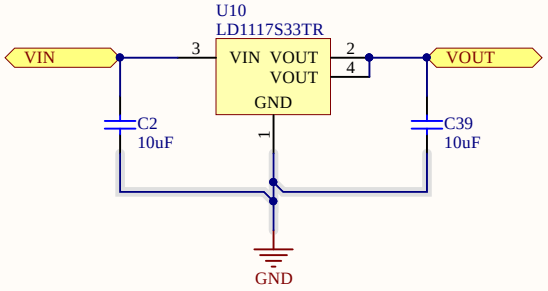

Title	3V3 Step Down	
Size: A	Number: XXXXXX	Revision: A
Date: 6/7/2017		Sheet 8 of 8
File: C:\Users\..\3V3_StepDown.SchDoc		Drawn By: Brent

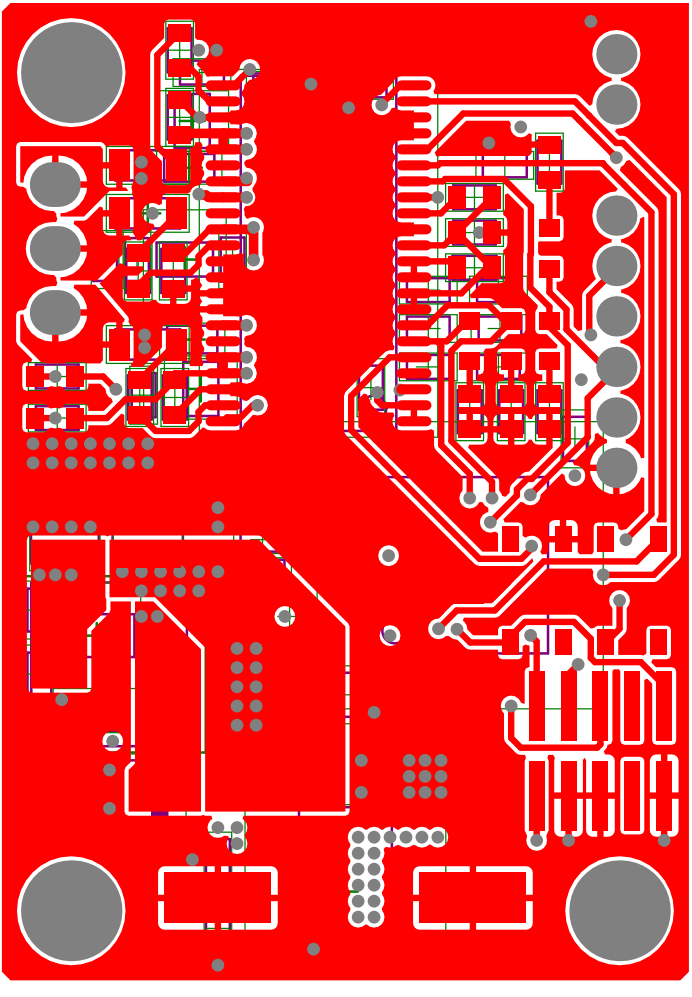

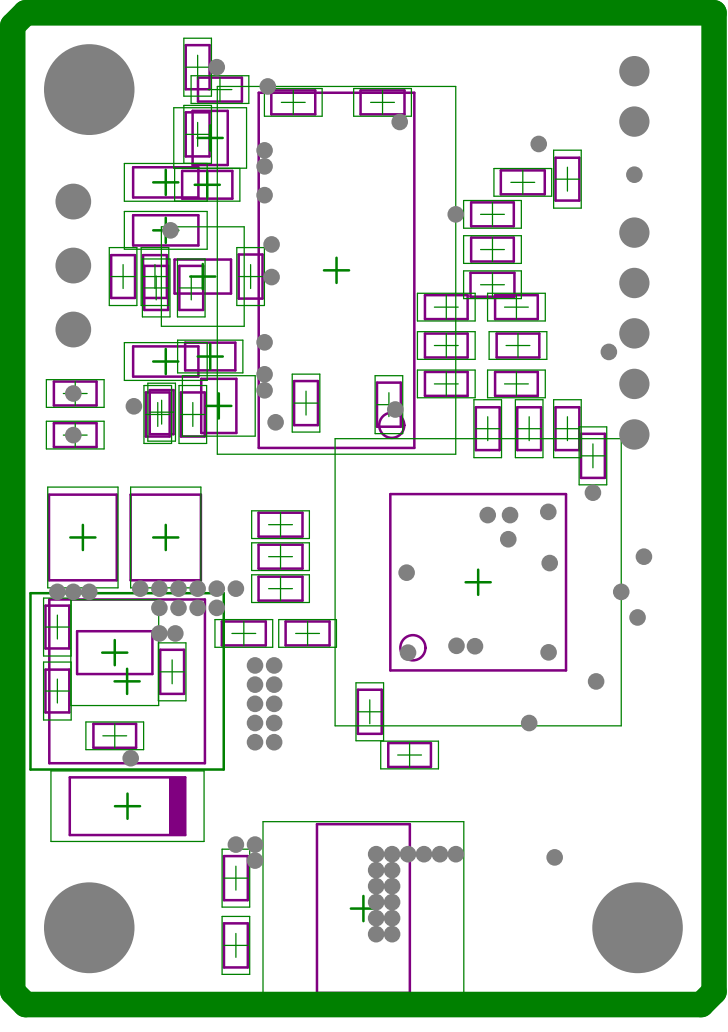

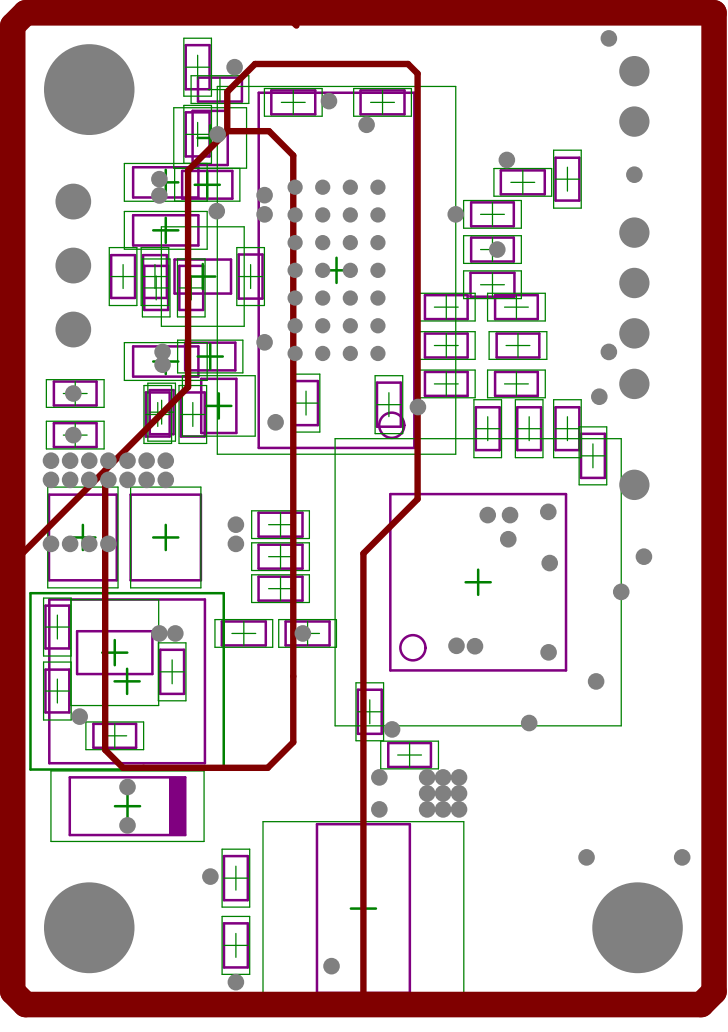

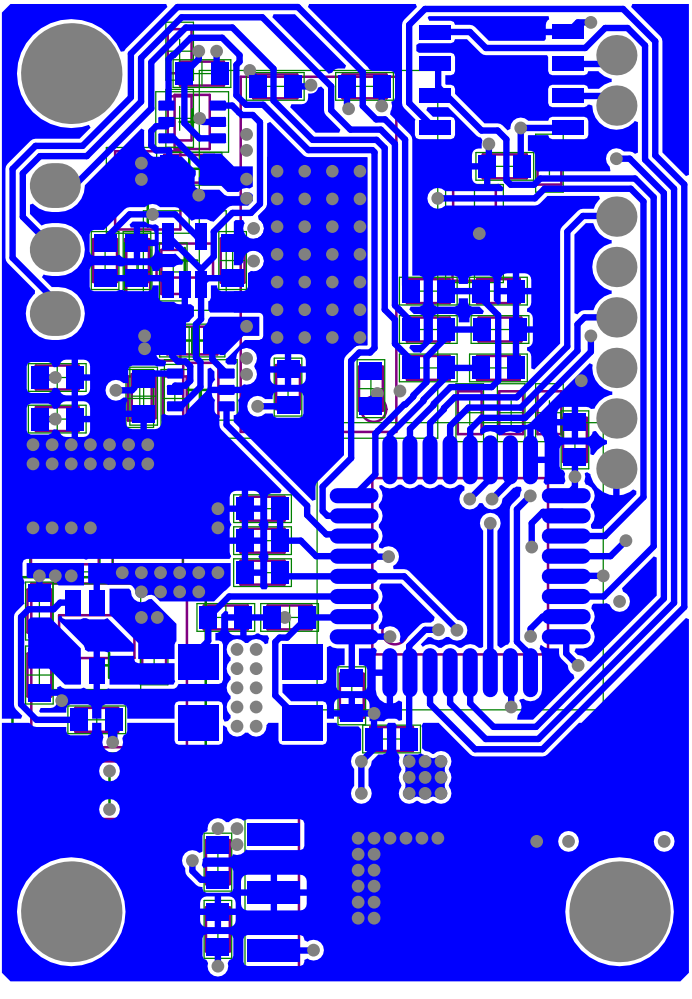

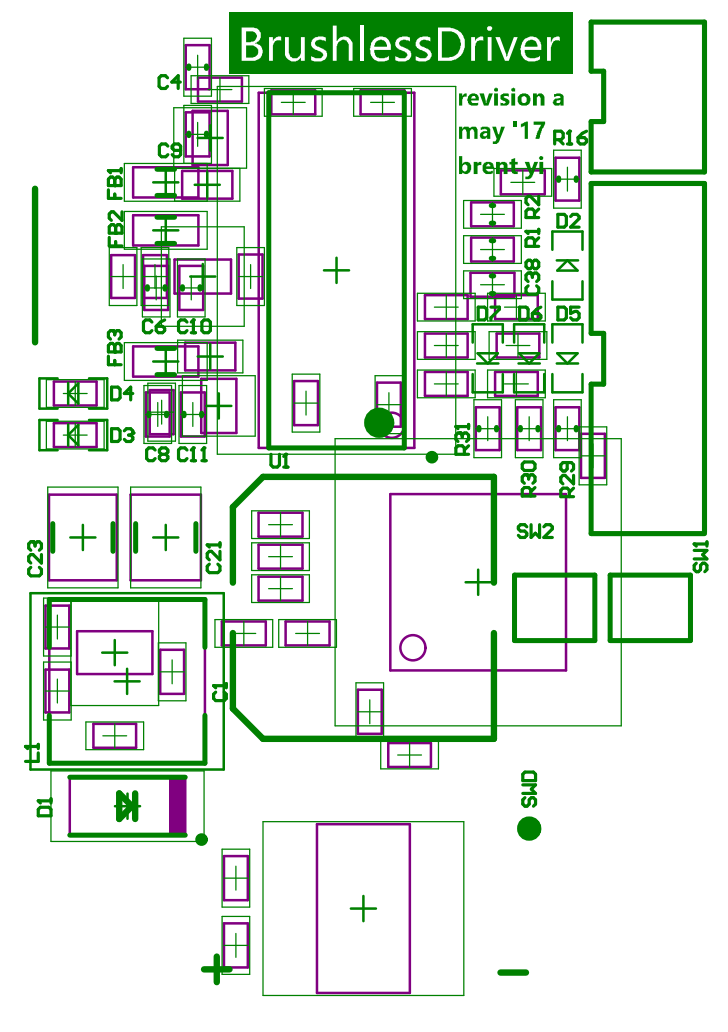
BrushlessDriver
revision a
may '17
brent yi
C4
C9
FB1
FB2
C6
C10
FB3
D4
D3
C8
C11
U1
R16
R2
R1
D2
C38
D7
D6
D5
R31
R30
R29
SW2
SW1
C23
C21
C1
L1
D1
SWD
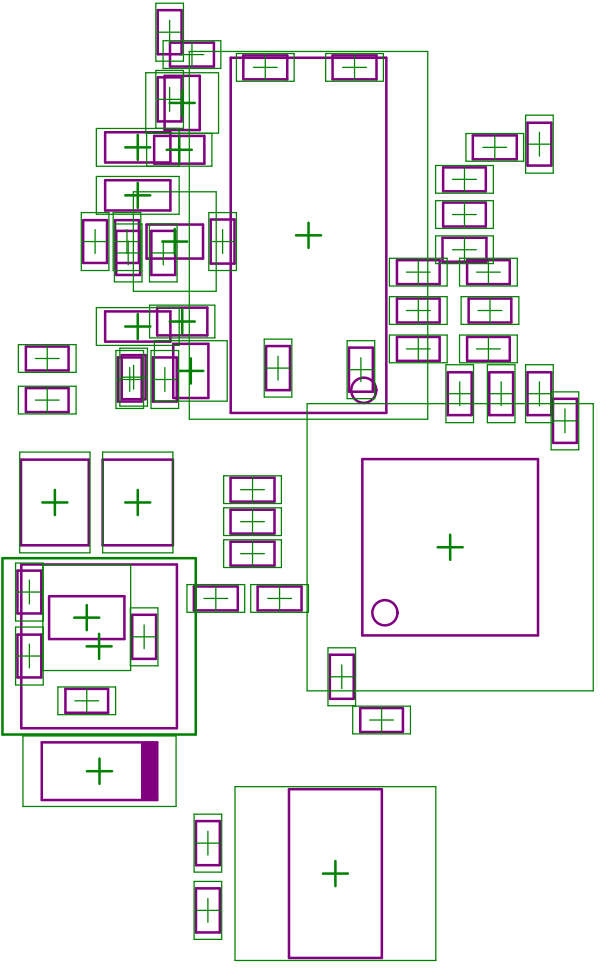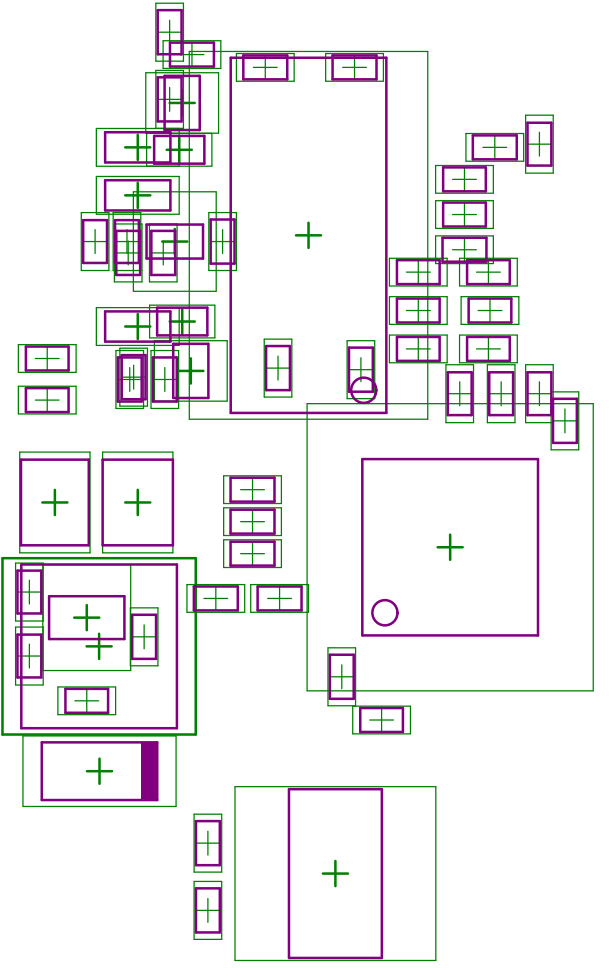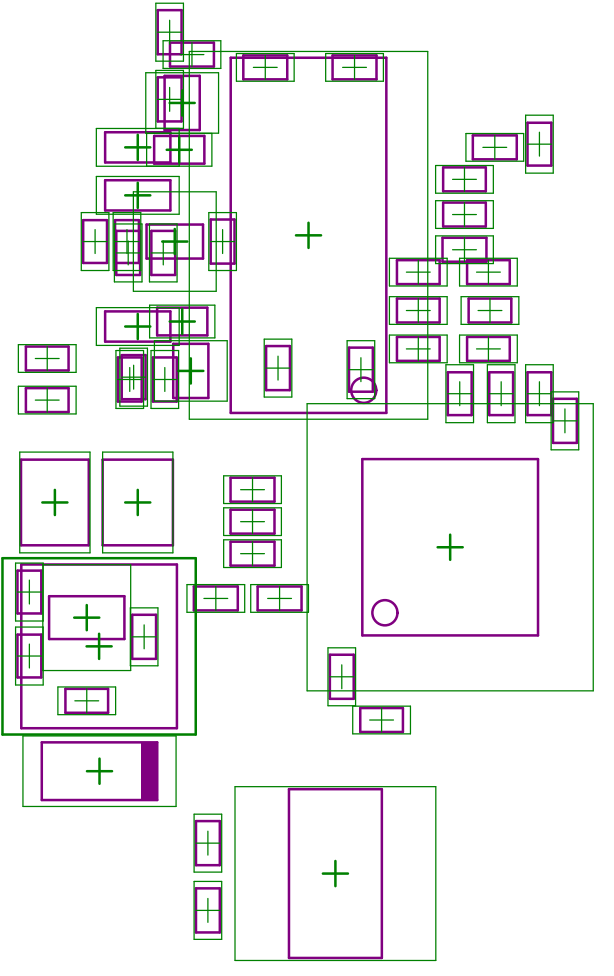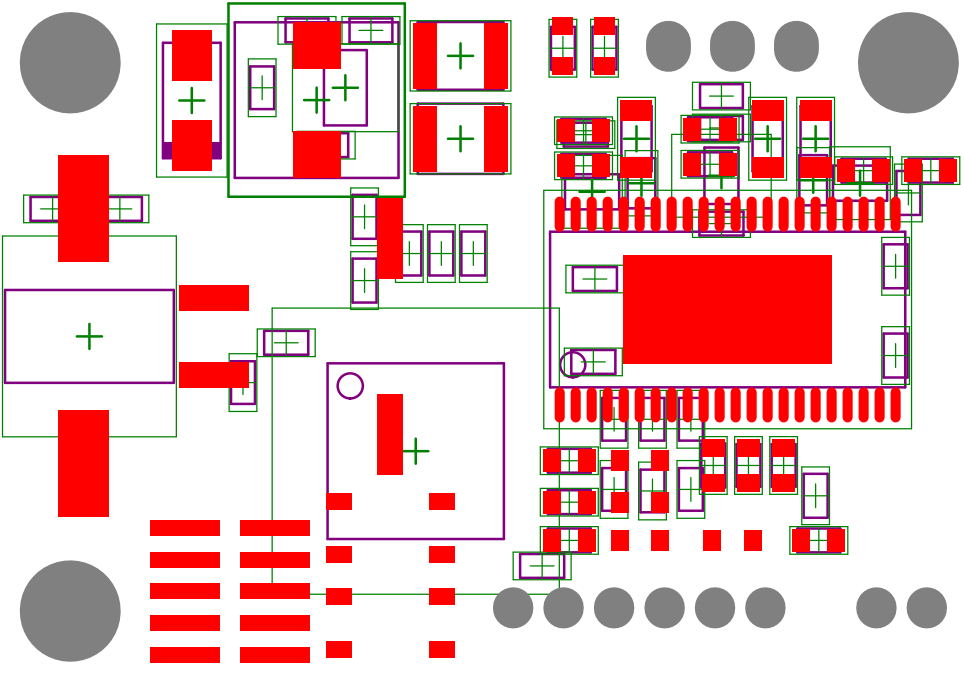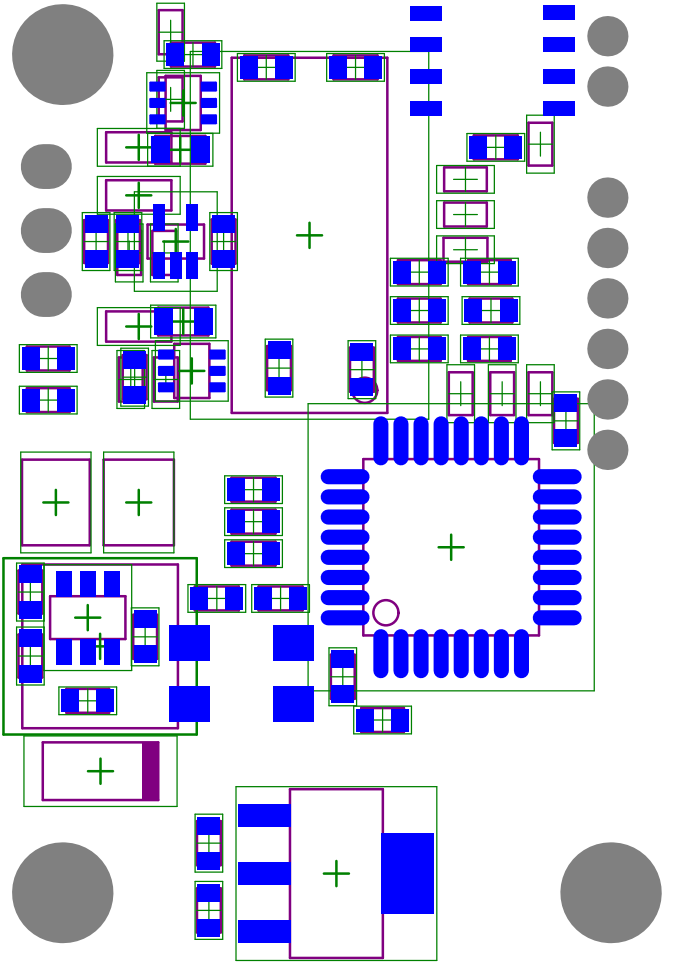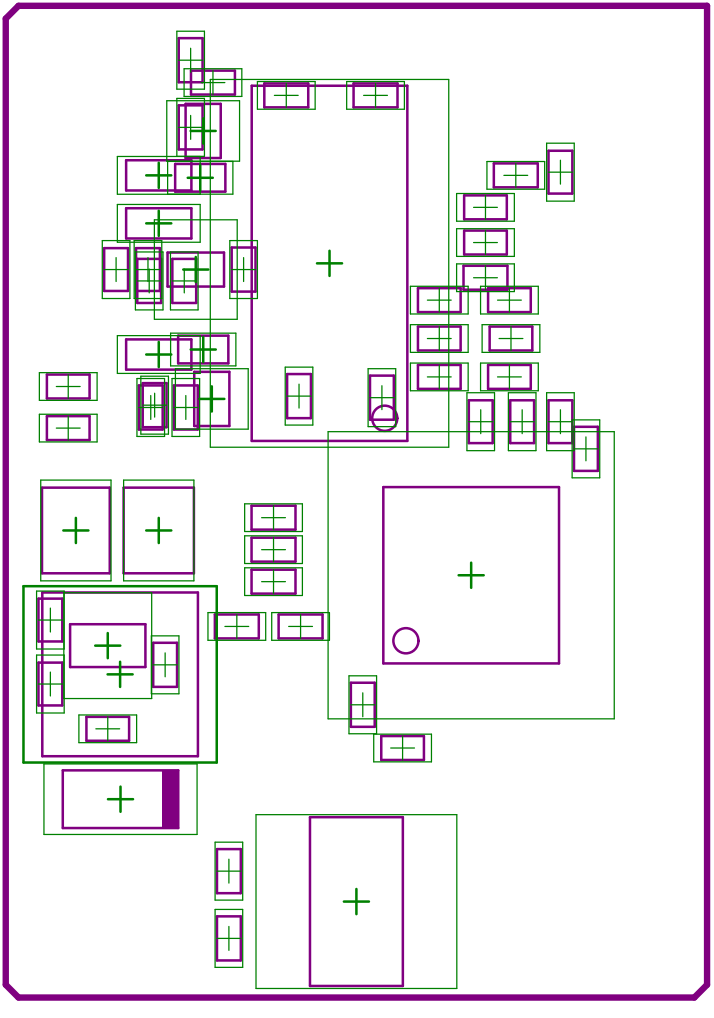
13~48V in
3.5A cont
6.5A peak
48SA
48SB
SCK
MOSI
MISO
SS
3V3
GND
U11
C40
R3
R4
R5
R6
R8
R7
C37
C2
C3
C5
U3
C18
C17
C19
C13
C14
C15
R11
X1
U10
C2
C39
C20_CS_A
U4_CS_A
R12_CS_A
Q12
R10
R9
R12_CS_C
R28
R27
U4_CS_C
C22
U5
R15
R14
R16