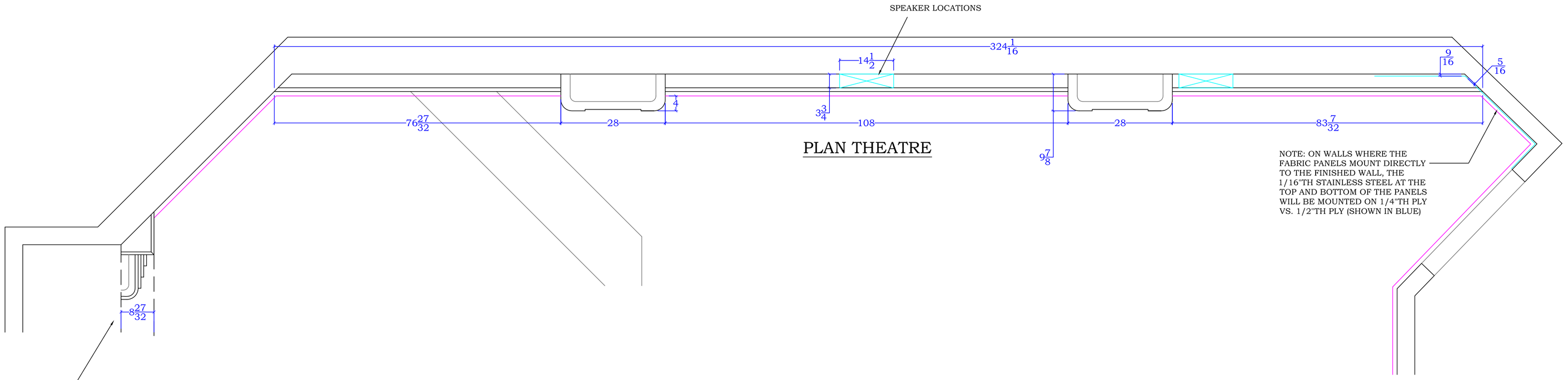

PLAN THEATRE

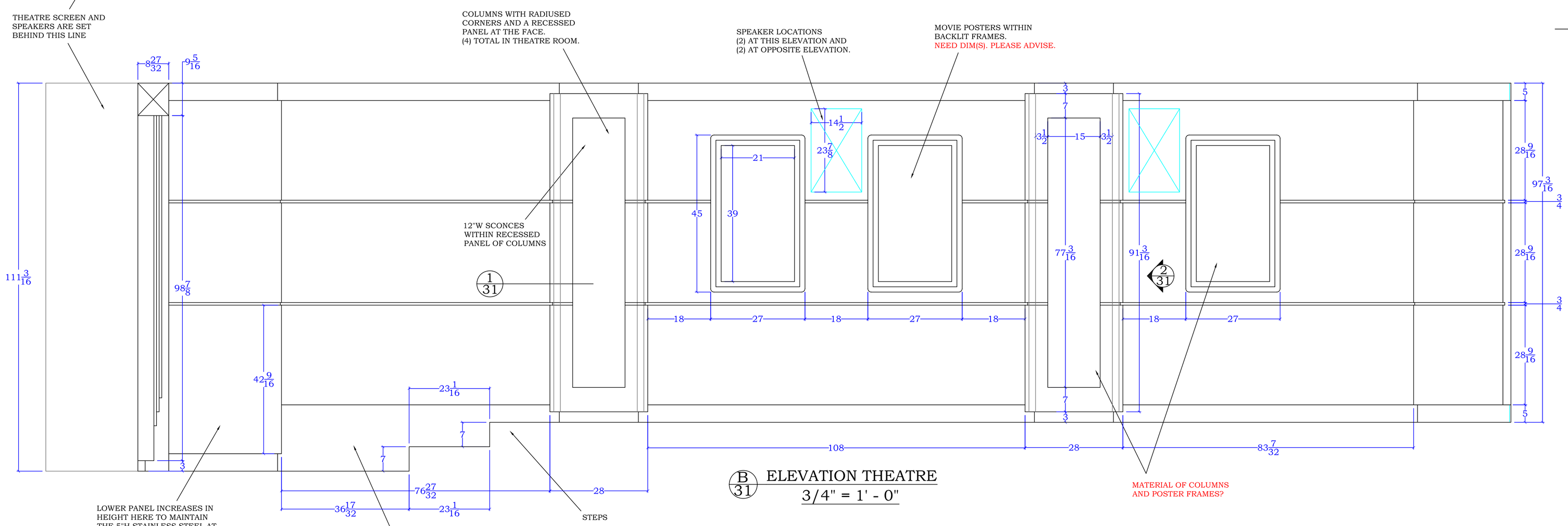

B/31 ELEVATION THEATRE
3/4" = 1' - 0"

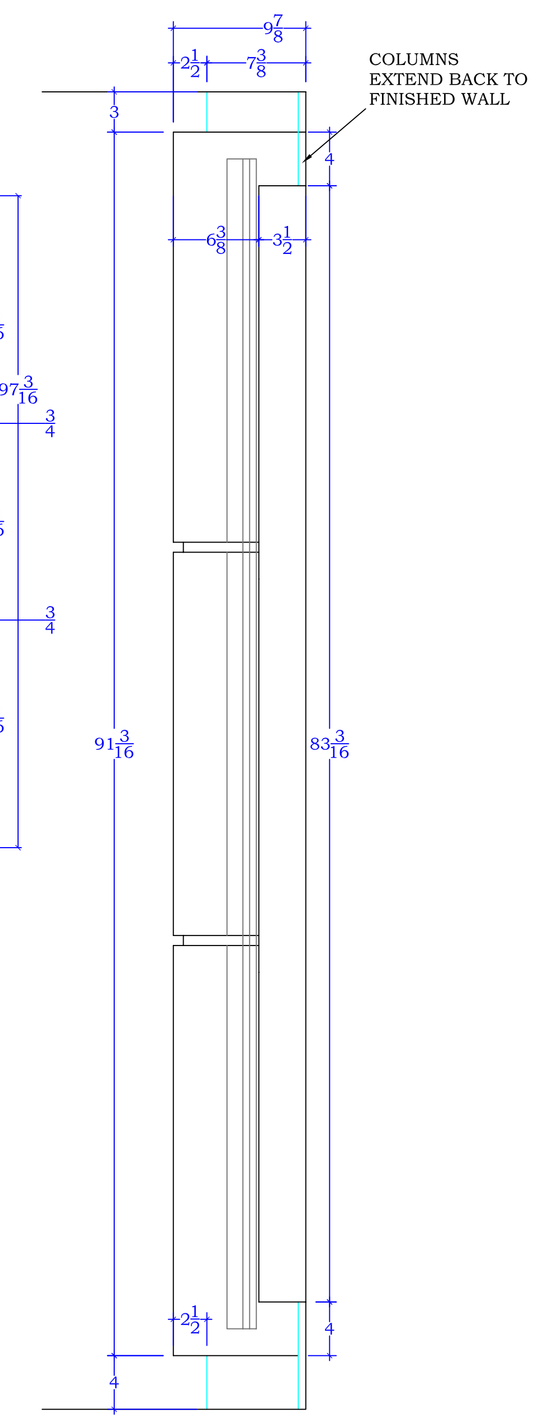

2/31 ELEVATION THEATRE
1 1/2" = 1' - 0"

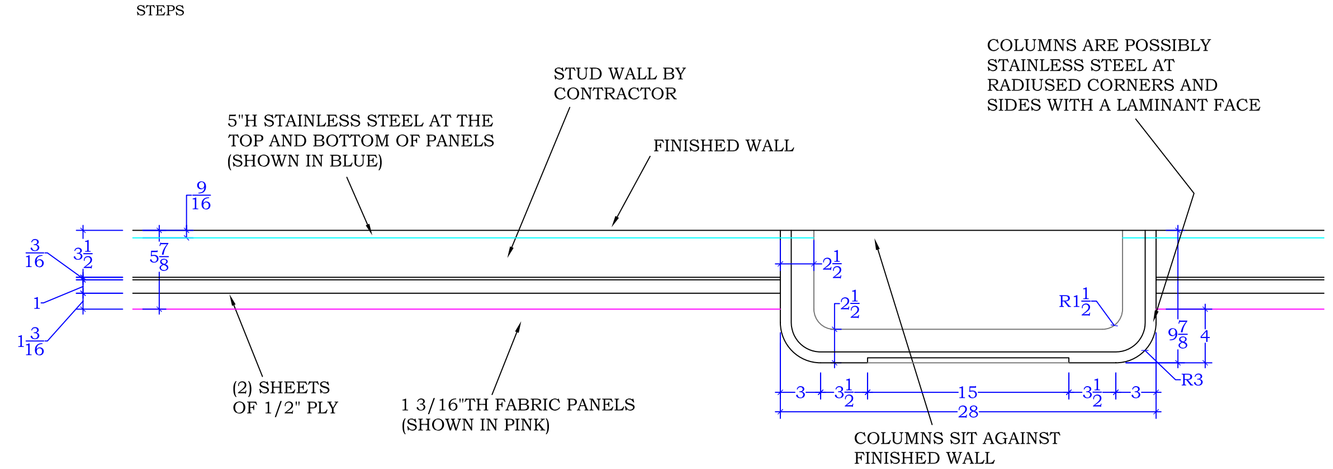

1/31 SECTION THEATRE
1 1/2" = 1' - 0"

THIS DOCUMENT CONTAINS PROPRIETARY DATA OF SACHI WOODWORKING. NO DISCLOSURE, REPRODUCTION OR USE OF ANY PART THEREOF MAY BE MADE, WITHOUT WRITTEN PERMISSION.

SACHI WOODWORKING, INC.
5152 KIELEY PLACE
CINCINNATI, OH 45217
Tel (513) 242-2500
Fax (513) 242-6197

APPROVED BY:

REVISIONS:
1 2/23/06
2 5/1/06
3 5/5/06
4
5
6
7

DRAWN BY: J. ETTER
DATE 2/21/06
SCALE AS NOTED

SOSNA RESIDENCE THEATRE

PAGE NUMBER
31