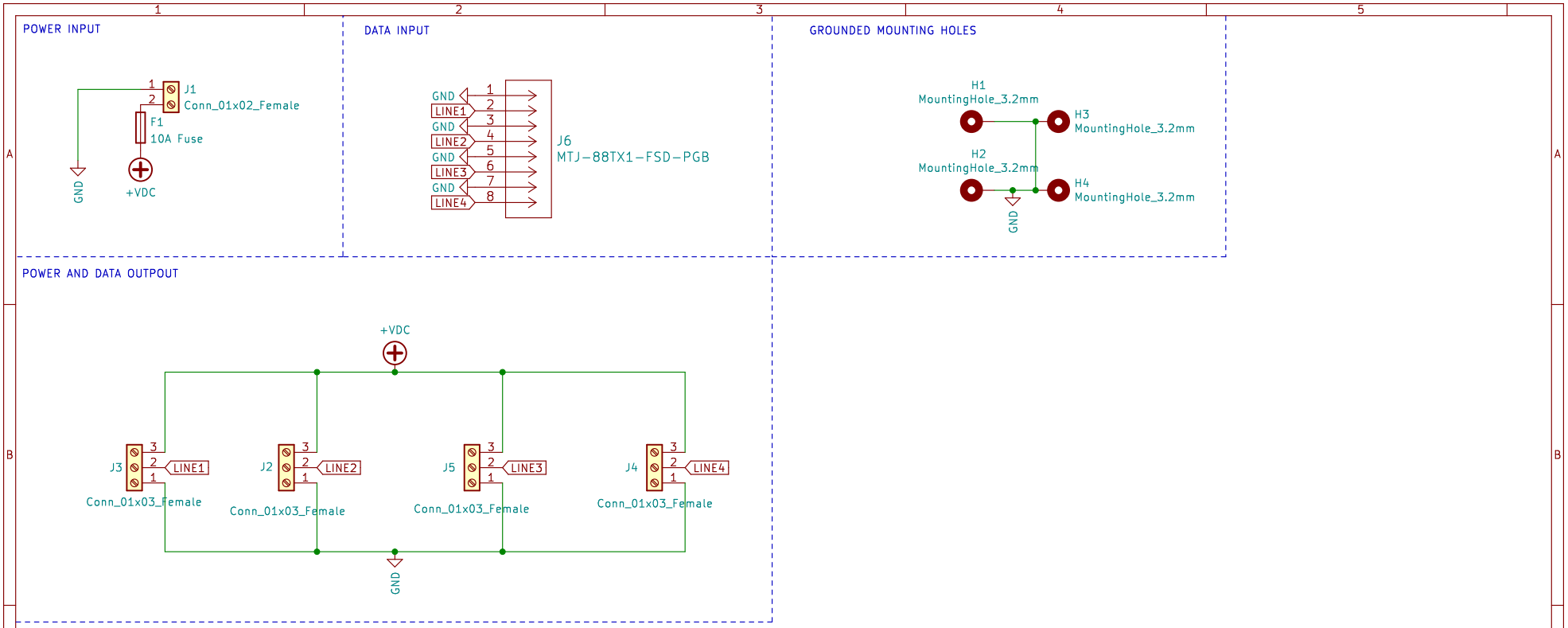

Amos Computing

Sheet: /

File: splitter.kicad_sch

Title: TPP-SSPI v3

Size: USLetter	Date: 2022-01-15	Rev:
KiCad E.D.A. kicad (6.0.0-0)		Id: 1/1