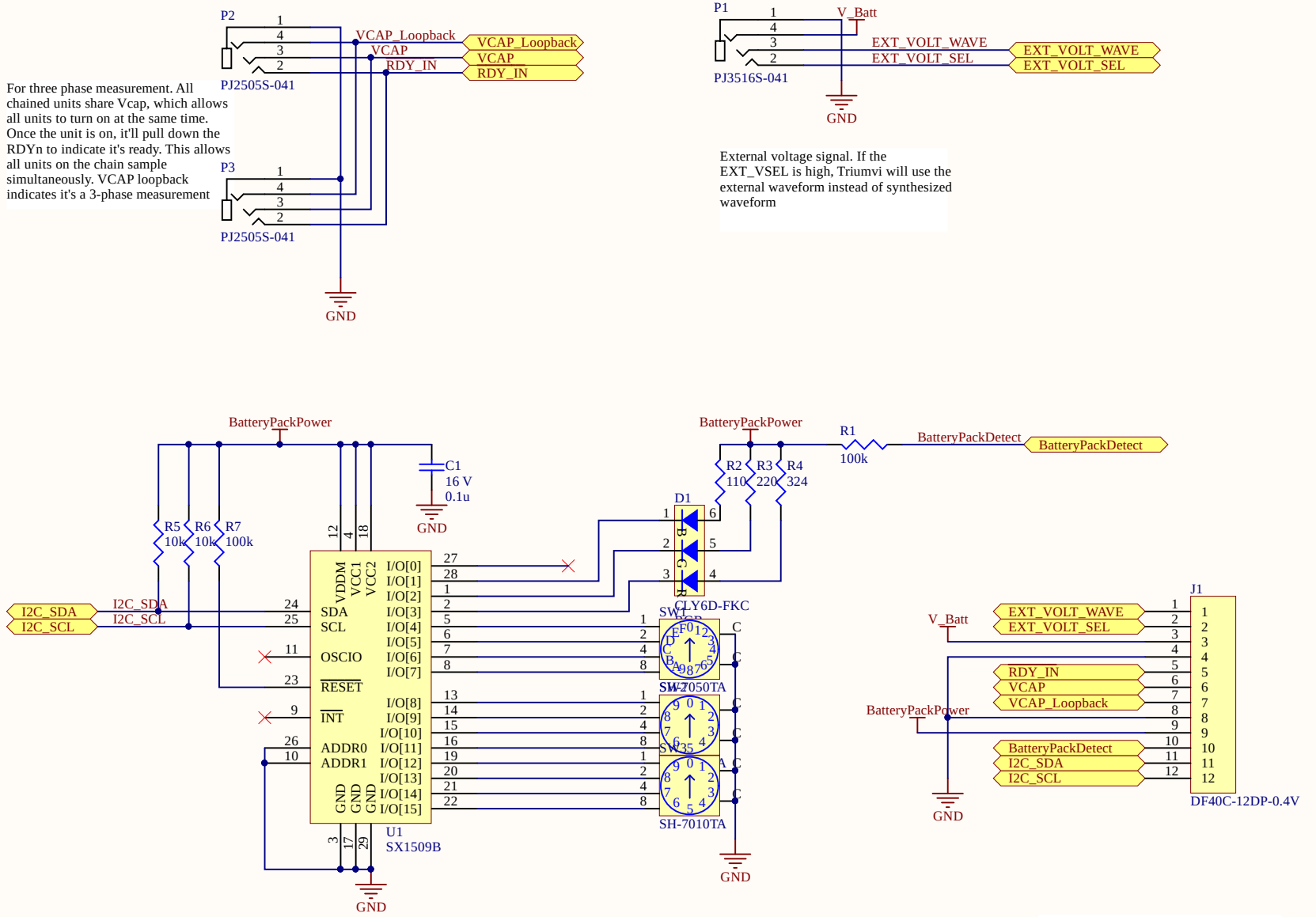


For three phase measurement. All chained units share Vcap, which allows all units to turn on at the same time. Once the unit is on, it'll pull down the RDYn to indicate it's ready. This allows all units on the chain sample simultaneously. VCAP loopback indicates it's a 3-phase measurement

External voltage signal. If the EXT_VSEL is high, Triumvi will use the external waveform instead of synthesized waveform

Triumvi configuration version 12.
This version is essentially the same as previous version. However, the form factor is tailored to medium size CT.

| | |
|---|---|
| Title | *Triumvi - Configuration* |
| Author: Ye-Sheng Kuo | Revision: 12 |
| Date: 6/9/2017 | Sheet 1 of 1 |
| File: config.SchDoc | |

University of Michigan