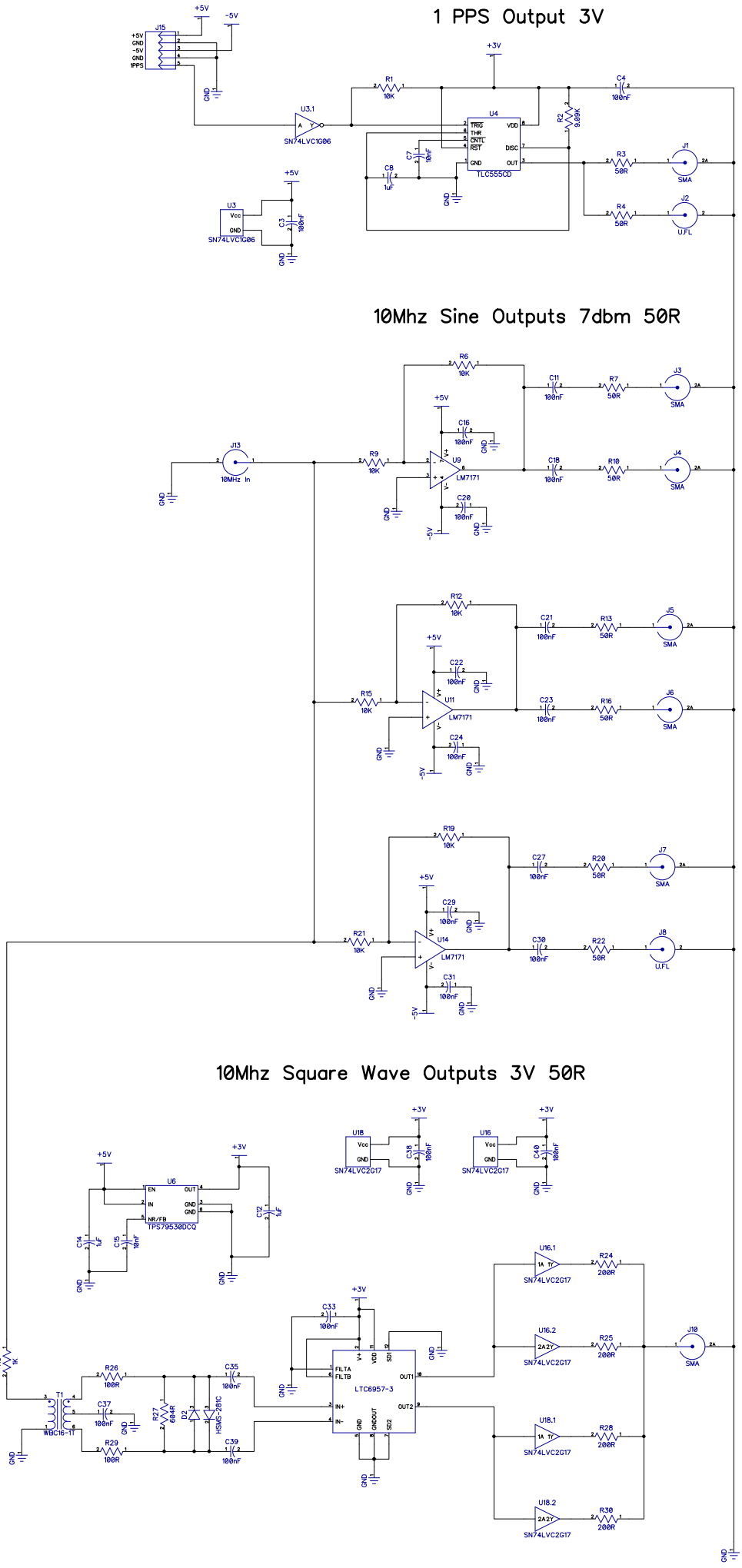
1 PPS Output 3V
10Mhz Sine Outputs 7dbm 50R
10Mhz Square Wave Outputs 3V 50R
J15
+5V
GND
-5V
1PPS
U3.1
SN74LVC1G06
U3
Vcc
GND
R1
10K
R2
9.09K
C4
100nF
U4
TRIG
THR
CNTL
RST
VDD
DISC
OUT
TLC555CD
C7
10nF
C8
1uF
C3
100nF
R3
50R
R4
50R
J1
SMA
J2
U.FL
+3V
R6
10K
C11
100nF
R7
50R
J3
C16
100nF
J13
10MHz In
R9
10K
U9
LM7171
C18
100nF
R10
50R
J4
C20
100nF
R12
10K
C21
100nF
R13
50R
J5
C22
100nF
R15
10K
U11
LM7171
C23
100nF
R16
50R
J6
C24
100nF
R19
10K
C27
100nF
R20
50R
J7
C29
100nF
R21
10K
U14
LM7171
C30
100nF
R22
50R
J8
C31
100nF
U18
SN74LVC2G17
C38
100nF
U16
SN74LVC2G17
C40
100nF
U6
EN
IN
NR/FB
OUT
GND
TPS79530DCQ
C14
1uF
C15
10nF
C12
1uF
C33
100nF
LTC6957-3
FILTA
FILTB
IN+
IN-
OUT1
OUT2
SD1
SD2
GNDOUT
U16.1
U16.2
U18.1
U18.2
R24
200R
R25
200R
R28
200R
R30
200R
J10
R5
1K
T1
WBC16-1T
R26
100R
R29
100R
C37
100nF
R27
604R
D2
HSMS-281C
C35
100nF
C39
100nF