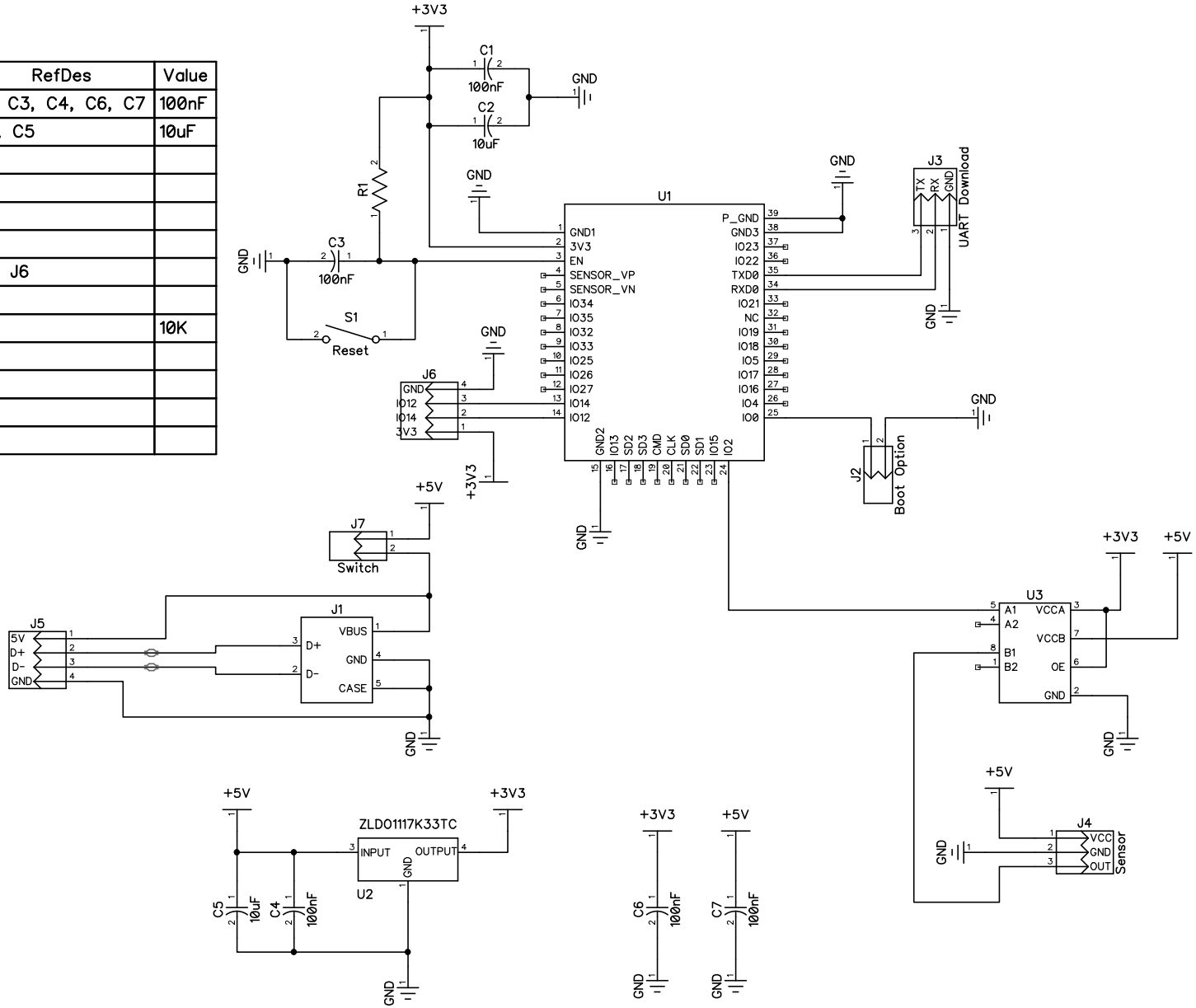#	Name	Manufacturer	Quantity	RefDes	Value
1	CAP_0603		5	C1, C3, C4, C6, C7	100nF
2	CAP		2	C2, C5	10uF
3	5787834-1	TE Connectivity	1	J1	
4	Boot Option	TE Connectivity	1	J2	
5	UART Download	TE Connectivity	1	J3	
6	Sensor	TE Connectivity	1	J4	
7	644456-4	TE Connectivity	2	J5, J6	
8	Switch	TE Connectivity	1	J7	
9	RES_0603		1	R1	10K
10	Reset		1	S1	
11	ESP32-WROOM-32U		1	U1	
12	ZLDO1117K33TC	Atmel	1	U2	
13	TXS0102DCTR	Texas Instruments	1	U3