1¼" Movable Shutter Plan

Project Name: i.e. Family Room

Shutter Description: i.e. West Window

Thank you for using Rockler's Shutter Design Wizard. Please review the following information before building your shutters. The Shutter Design Wizard allows you to save plans individually, email them to yourself or your builder, or print them out for use in your shop. Plus, you can reset the Shutter Design Wizard to configure additional shutter panel sizes as needed for your entire project.

Important Notes:

- Consult the Shutter Measuring and Mounting Guide to determine accurate shutter panel dimensions.
- The program assumes 5/4 stock (1 1/16" finished thickness) for all frame pieces (stiles and rails). Minimum thickness for all Shutter Stile Jigs is 1".
- The program uses preset values for the stile and rail widths. Stiles are a standard 1½" wide. Top and bottom rails adjust according to panel height.
- Plan defaults to dowels for the frame joinery. If using mortise and tenon joinery for the frame, add tenon length to the rails.
- For shutters over 48" in height, a middle rail is recommended. See the Shutter Measuring and Mounting Guide for details.
- When drilling basswood, drill slowly and allow the bit to clear the chips. Basswood is a stringy hardwood and if you drill too fast, the shavings will bind up in the self-centering bit.
- Movable louvers use one shutter pin on each end to connect the louver to the stiles. Do not glue the plastic pins in the louver or in the stile.
- Movable pins have a 1/32" shoulder to provide rotation clearance.
- Shutter plan does not include additional stile width required for the overlap between adjoining shutters. Consult the Shutter Measuring and Mounting Guide for more information on multiple shutter configurations.

Distributed by Rockler Companies, Inc.
©2011 Rockler Woodworking and Hardware

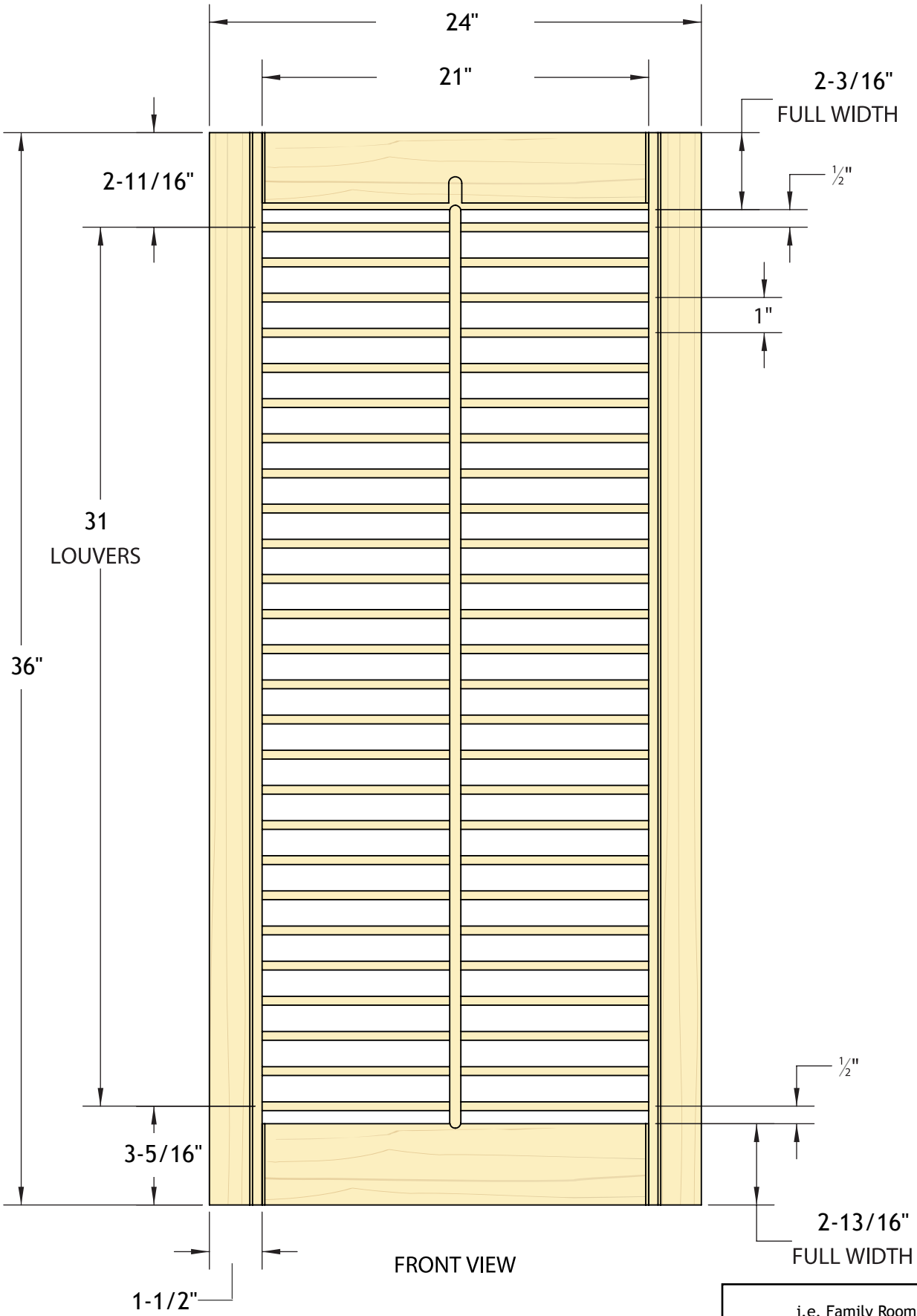

i.e. Family Room

i.e. West Window

Note: Drawings not to scale and number of louvers shown may not represent actual number required.

1-1/4 Moveable

Distributed by Rockler Companies, Inc.
©2011 Rockler Woodworking and Hardware

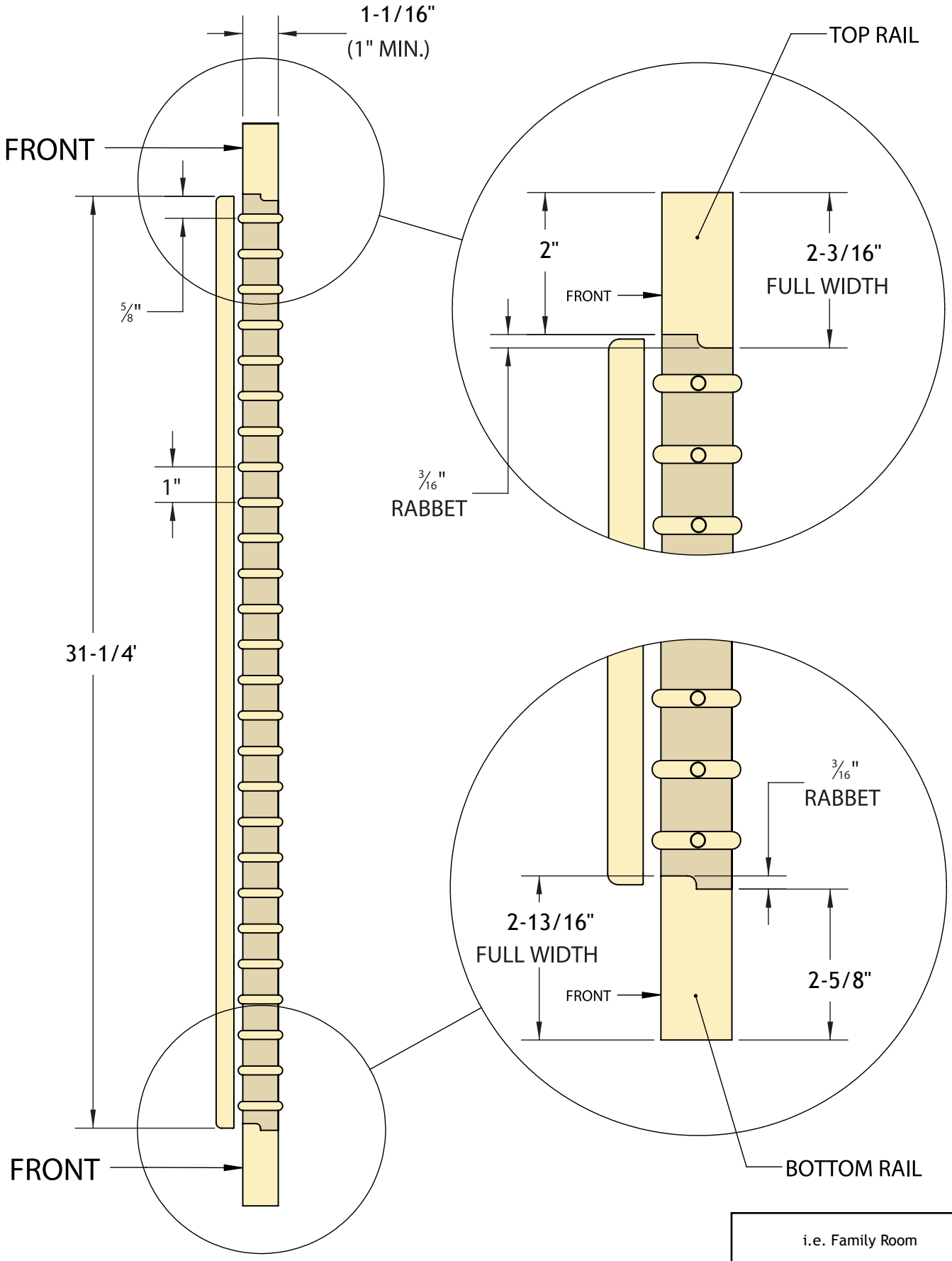

i.e. Family Room

i.e. West Window

Note: Drawings not to scale and number of louvers shown may not represent actual number required.

1-1/4 Moveable

Distributed by Rockler Companies, Inc.
©2011 Rockler Woodworking and Hardware

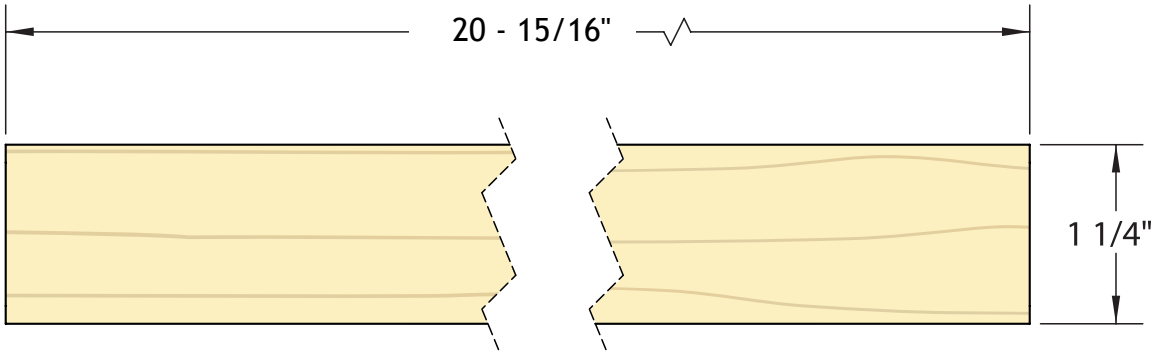

LOUVER

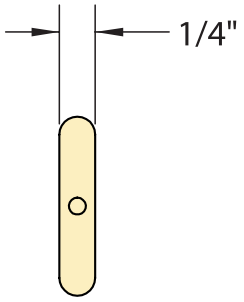

LOUVER PROFILE

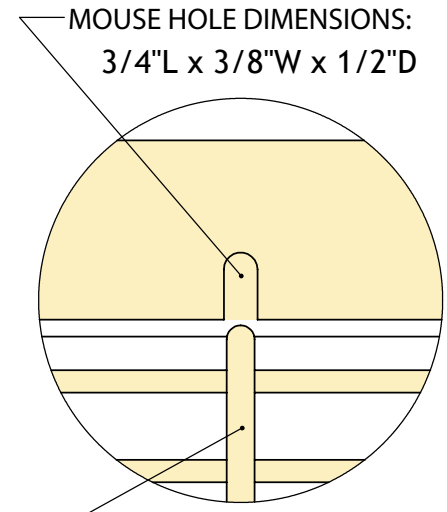

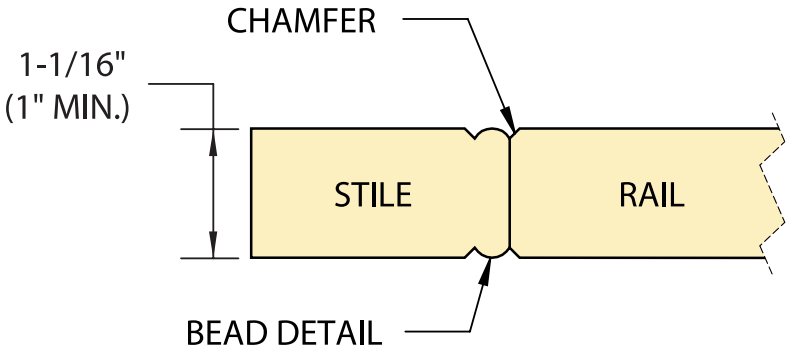

TOP VIEW DETAIL

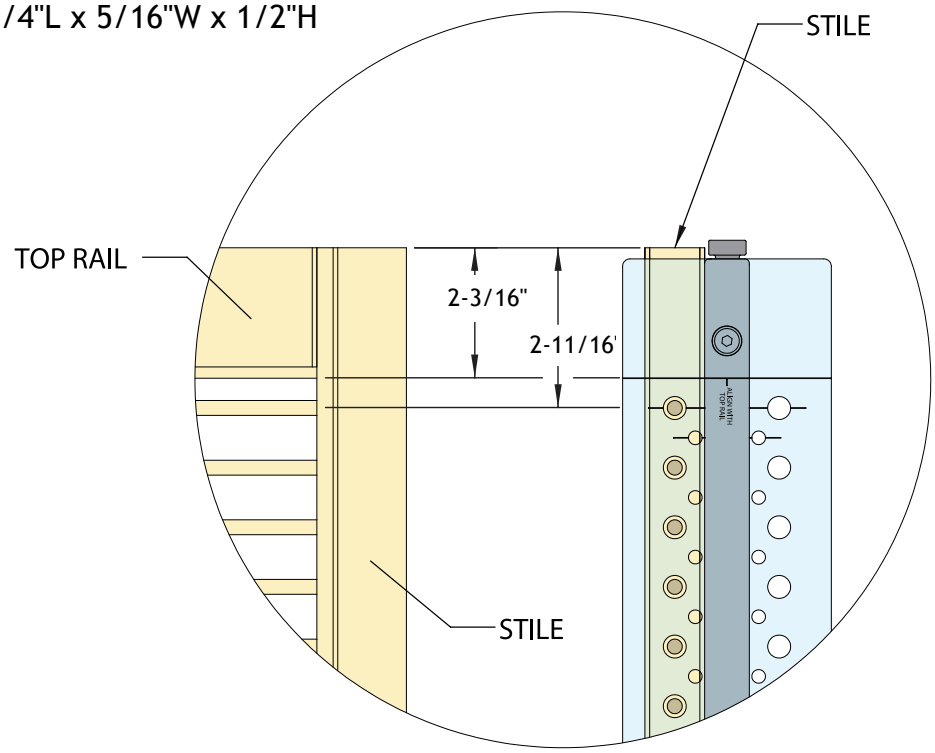

STILE JIG ALIGNMENT DETAIL

Note: Drawings not to scale and number of louvers shown may not represent actual number required.

1-1/4 Moveable

i.e. Family Room

i.e. West Window

Distributed by Rockler Companies, Inc.
©2011 Rockler Woodworking and Hardware

Cut List				
	Qty	Thickness	Width	Length
Stile	2	1-1/16"	1-1/2"	36"
Top Rail	1	1-1/16"	2-3/16"	21"
Bottom Rail	1	1-1/16"	2-13/16"	21"
Louver	31	1/4"	1-1/4"	20 - 15/16"

Hardware List (per Shutter) (Note: Prices shown are current as of 2/12/2026, and are subject to change.)						
SKU	Description	Qty Required	Pkg Qty	Qty	Unit Price	Ext Price
49178		62	50	2	$3.99	$7.98
47678		62	50	2	$10.99	$21.98
40804		16	Ea.	16	$12.99	$207.84
68174	(Stiles)	37"	Ea.	2	$16.99	$33.98
61101	(Rails)	22"	Ea.	2	$34.99	$69.98
Additional Options:						
Router Bits:						
43503			1		$44.99	
Jig:						
45352			1		$13.99	
Doweling Jig:						
54854			1		$29.99	
21139			1		$4.99	

i.e. Family Room
i.e. West Window

Note: Drawings not to scale and number of louvers shown may not represent actual number required.

1-1/4 Moveable Control Arm

Distributed by Rockler Companies, Inc.
©2011 Rockler Woodworking and Hardware

Hinge List			
SKU	Description	Pkg	Unit Price
43694		Pr.	$5.99
43988		Pr.	$3.99
44960		Pr.	$3.99
45509		Pr.	$5.99
46583		Pr.	$5.99
46928		Pr.	$6.99
47148		Pr.	$5.99
47190		Pr.	$4.99
47658		Pr.	$3.99

i.e. Family Room
i.e. West Window

Note: Drawings not to scale and number of louvers shown may not represent actual number required.

1-1/4 Moveable Control Arm

Distributed by Rockler Companies, Inc.
©2011 Rockler Woodworking and Hardware