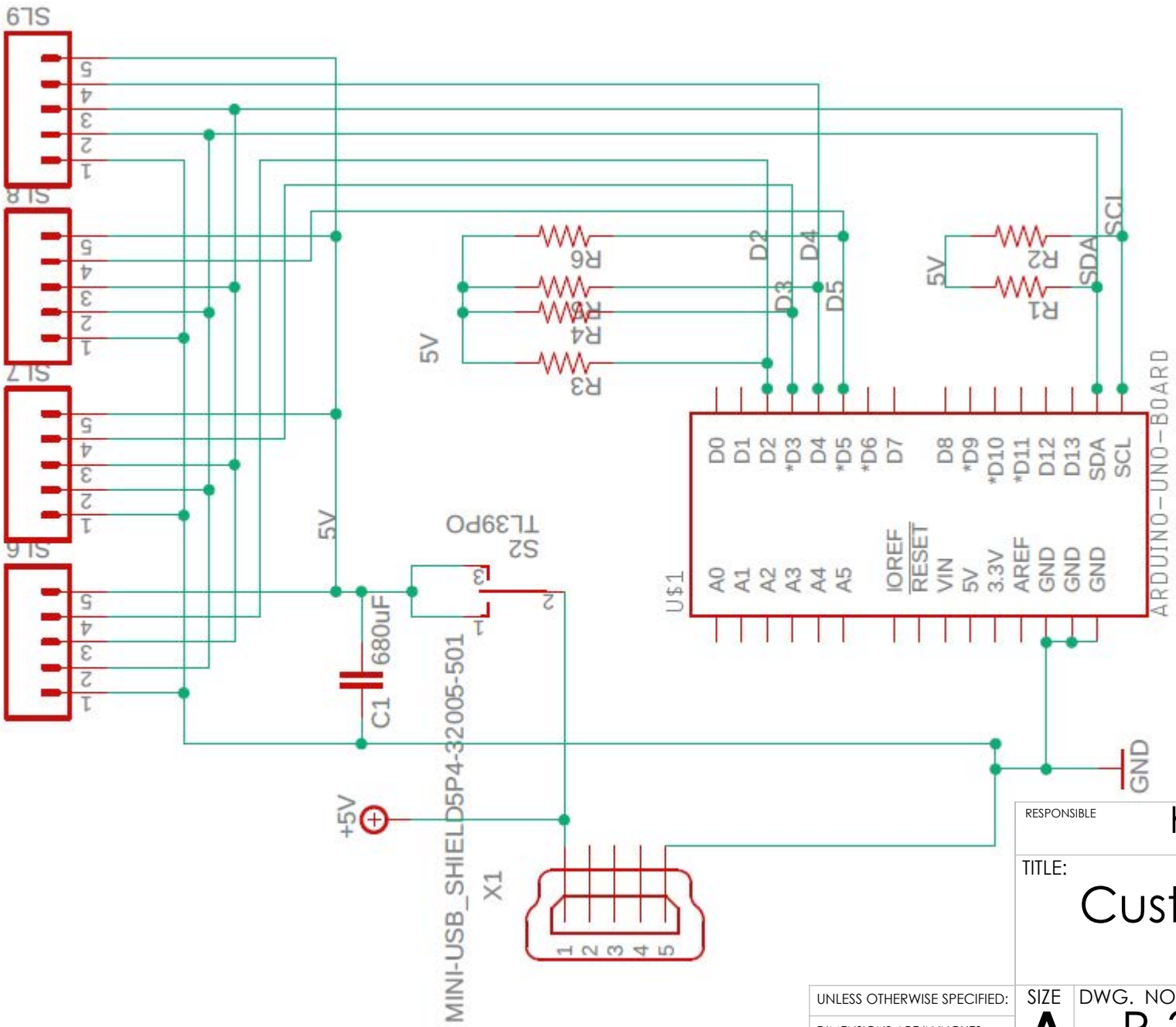

RESPONSIBLE	Kian Pu		
TITLE:	Custom PCB		
UNLESS OTHERWISE SPECIFIED:	SIZE A	DWG. NO. P-3 2/2	REV 1
DIMENSIONS ARE IN INCHES TOLERANCES: FRACTIONAL ± DO NOT SCALE DRAWING	SCALE: 1:1	WEIGHT:	SHEET 1 OF 1