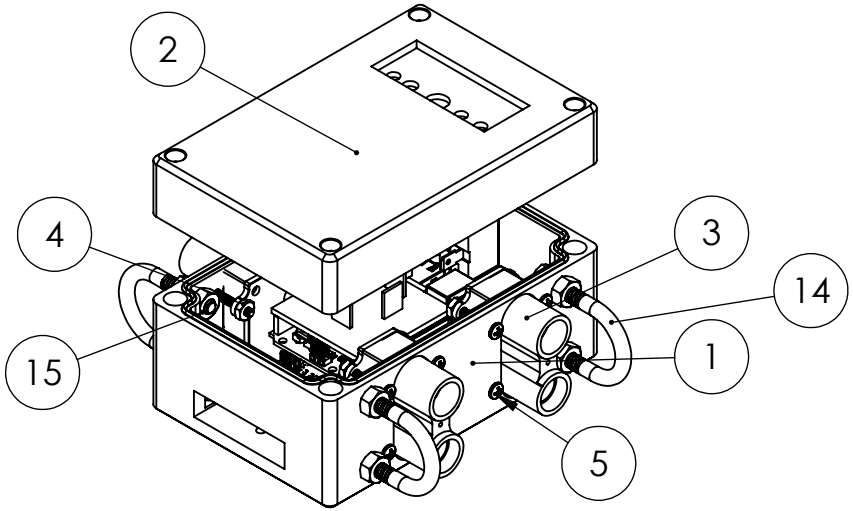

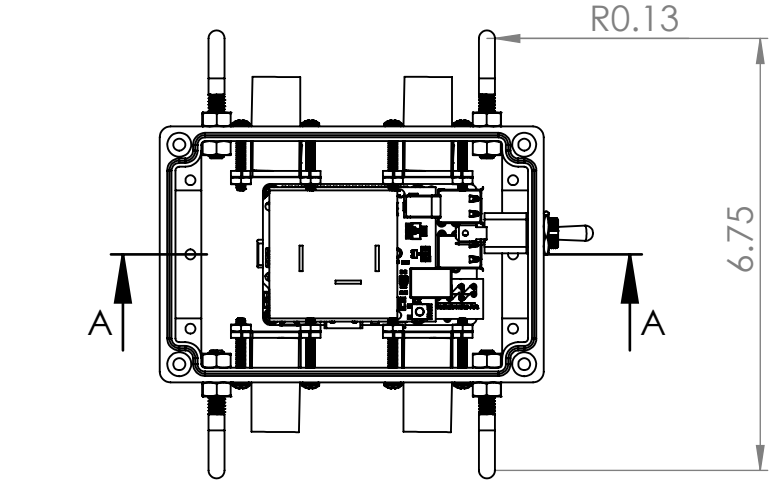

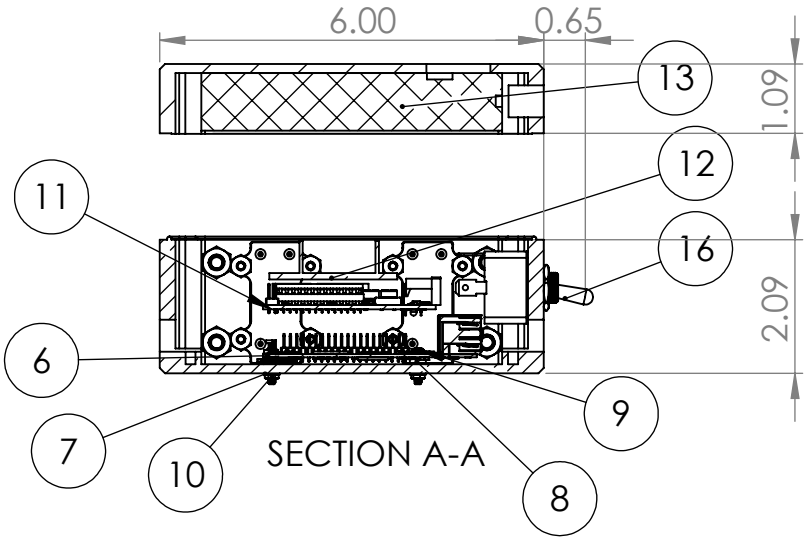

ITEM NO.	PART NUMBER	DESCRIPTION	QTY.
1	P-1	Box Top Half (75895K14)	1
2	P-2	Box Bottom Half (75895K14)	1
3	O-5	Gamin LIDAR Lite-3 Sensor	4
4	O-6	6-32 1" Nut (91813A130)	16
5	O-7	6-32 1" Screw (91735A154)	16
6	O-8	Raspberry Pi 3Bv1.2	1
7	0-9	Size 3 Washer (90107A004)	16
8	0-10	Size 4 Unthreaded Space (92510A385)	4
9	O-11	18-8 Screw (91772A096)	4
10	O-12	18-8 Nut (91841A004)	4
11	O-13	Arduino uno	1
12	P-3	Custom PCB	1
13	O-14	Battery Pack	1
14	O-15	1/4"-20 304 Stainless U-Bolt (8896T103)	4
15	O-16	1/4"-20 Nut (95462A029)	8
16	O-17	Toggle Switch (7343K185)	1

RESPONSIBLE Andrew Dinka

TITLE:

Sensor Package Prototype V3

UNLESS OTHERWISE SPECIFIED:

DIMENSIONS ARE IN INCHES
TOLERANCES:
FRACTIONAL ±
DO NOT SCALE DRAWING

SIZE	DWG. NO.	REV
A	A-2	1
SCALE: 1:3	WEIGHT:	SHEET 1 OF 1