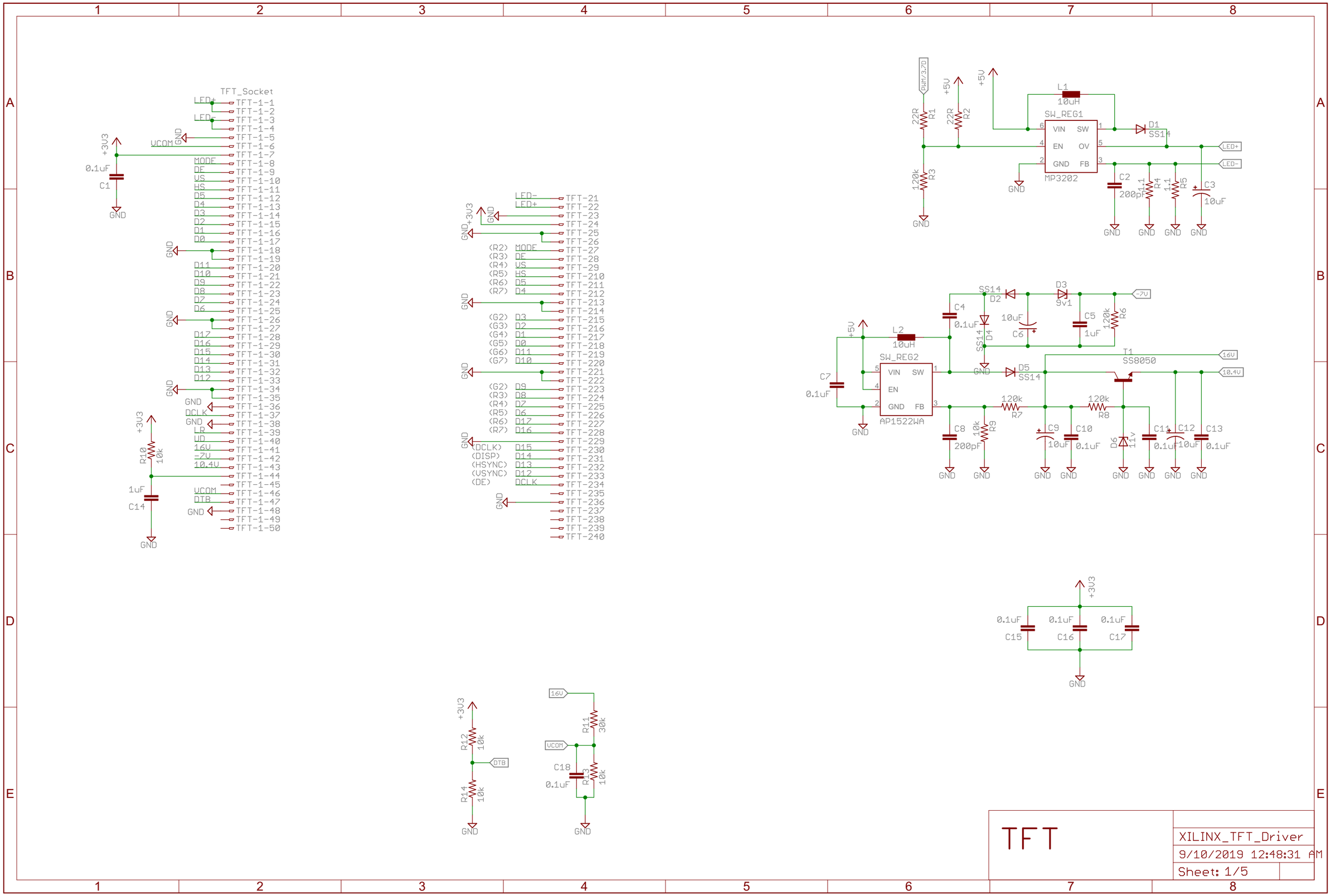

TFT	XILINX_TFT_Driver
	9/10/2019 12:48:31 AM
	Sheet: 1/5

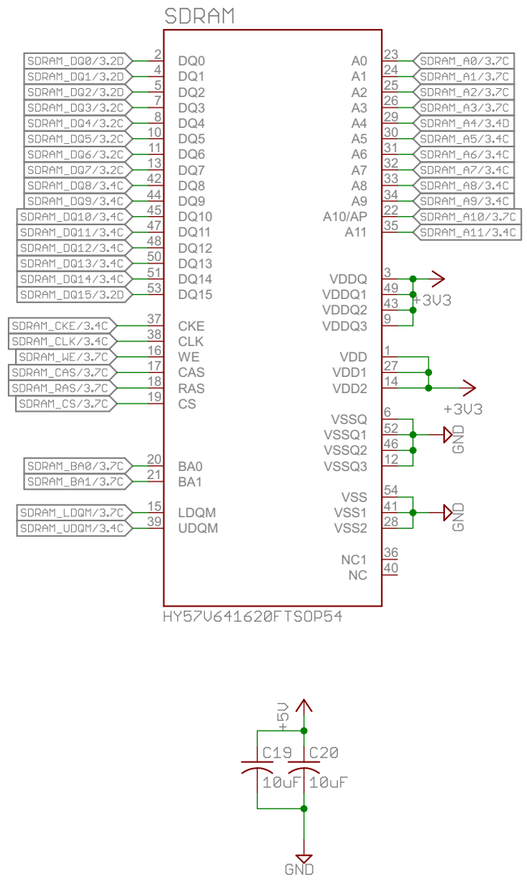

XILINX_TFT_Driver
9/10/2019 12:48:31 AM
Sheet: 2/5

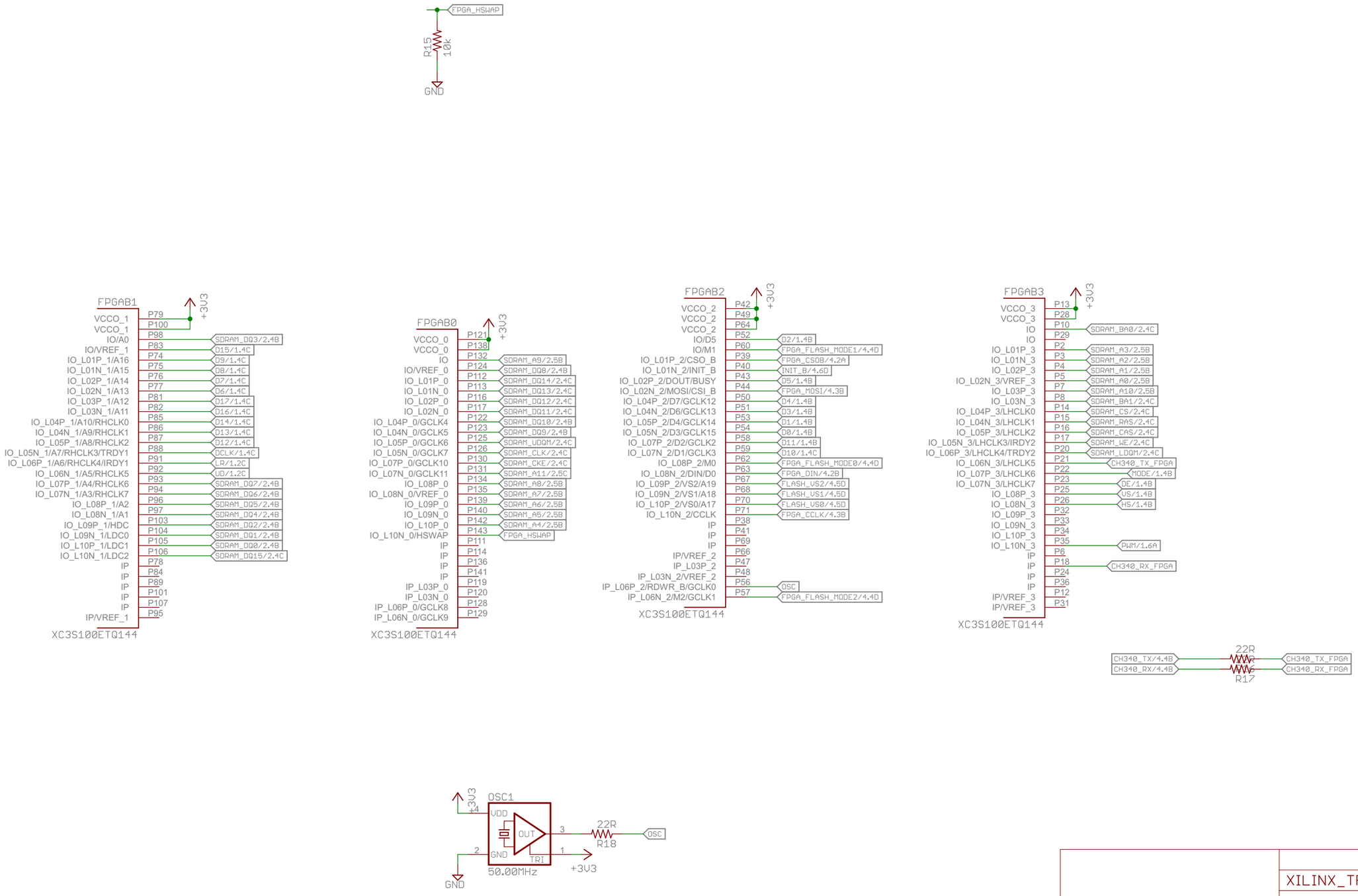

XILINX_TFT_Driver

9/10/2019 12:48:31 AM

Sheet: 3/5

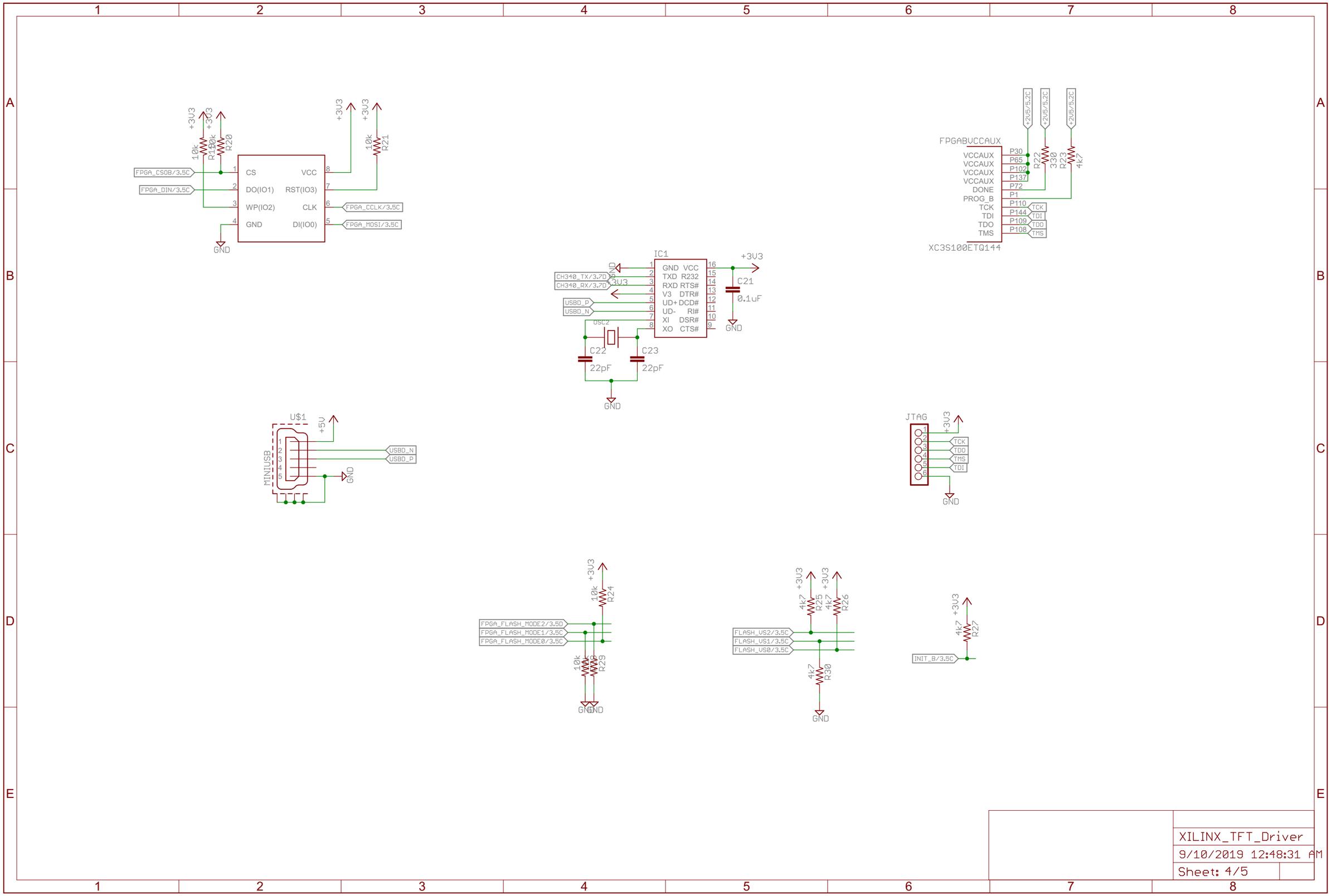
FPGA_CSOB/3.5C
FPGA_DIN/3.5C
CS
DO(IO1)
WP(IO2)
GND
VCC
RST(IO3)
CLK
DI(IO0)
FPGA_CCLK/3.5C
FPGA_MOSI/3.5C
+3V3
10k
R19
R20
R21
IC1
GND VCC
TXD R232
RXD RTS#
V3 DTR#
UD+ DCD#
UD- RI#
XI DSR#
XO CTS#
CH340_TX/3.7D
CH340_RX/3.7D
USBD_P
USBD_N
OSC2
C21
0.1uF
C22
22pF
C23
22pF
FPGABVCCAUX
VCCAUX
DONE
PROG_B
TCK
TDI
TDO
TMS
P30
P65
P102
P137
P72
P1
P110
P144
P109
P108
+2V5/5.2C
R22
330
R23
4k7
XC3S100ETQ144
U$1
MINIUSB
+5V
JTAG
FPGA_FLASH_MODE2/3.5D
FPGA_FLASH_MODE1/3.5C
FPGA_FLASH_MODE0/3.5C
R24
R28
R29
FLASH_VS2/3.5C
FLASH_VS1/3.5C
FLASH_VS0/3.5C
R25
R26
R30
INIT_B/3.5C
R27
XILINX_TFT_Driver
9/10/2019 12:48:31 AM
Sheet: 4/5

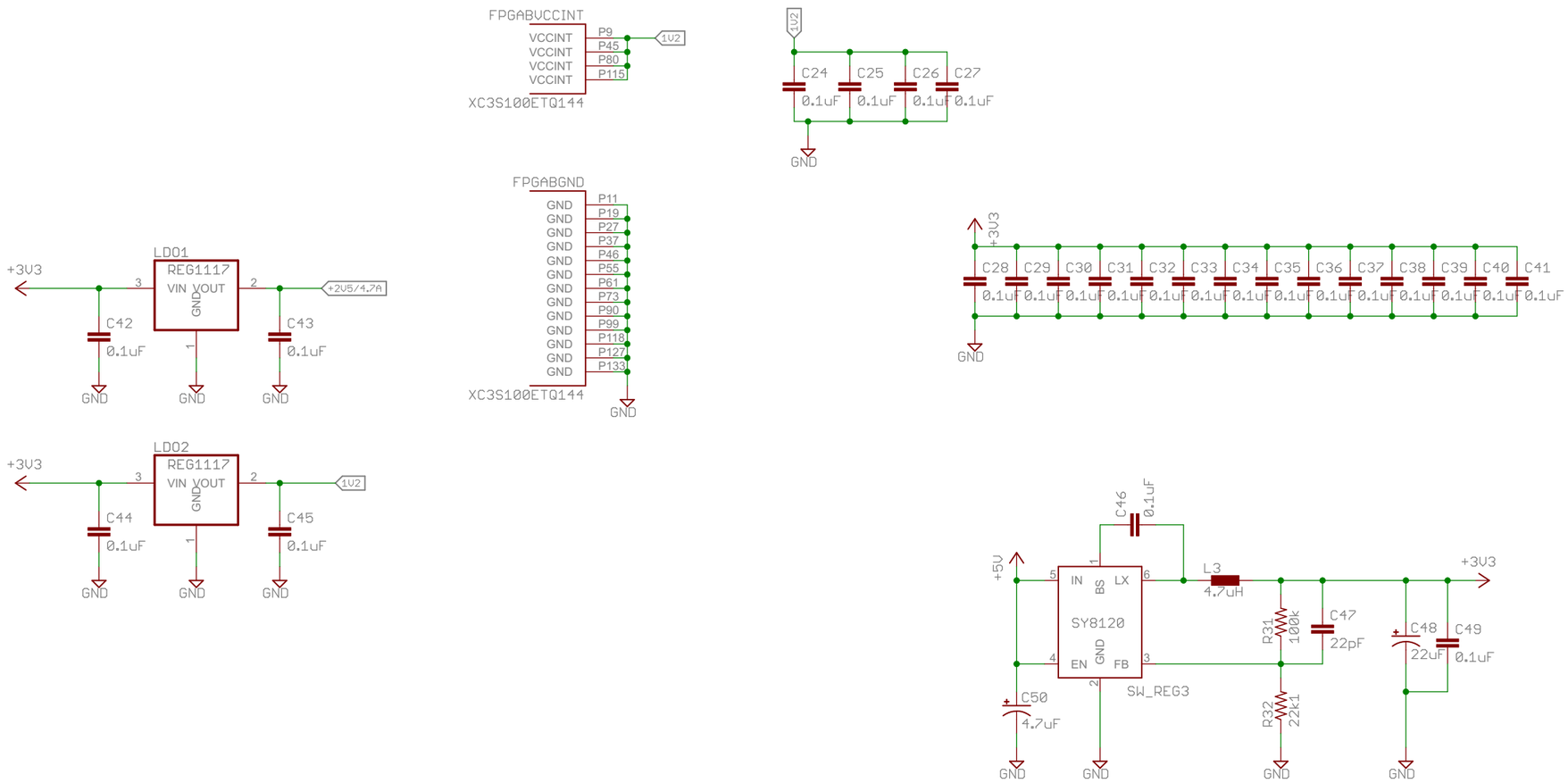

	XILINX_TFT_Driver
	9/10/2019 12:48:31 AM
	Sheet: 5/5