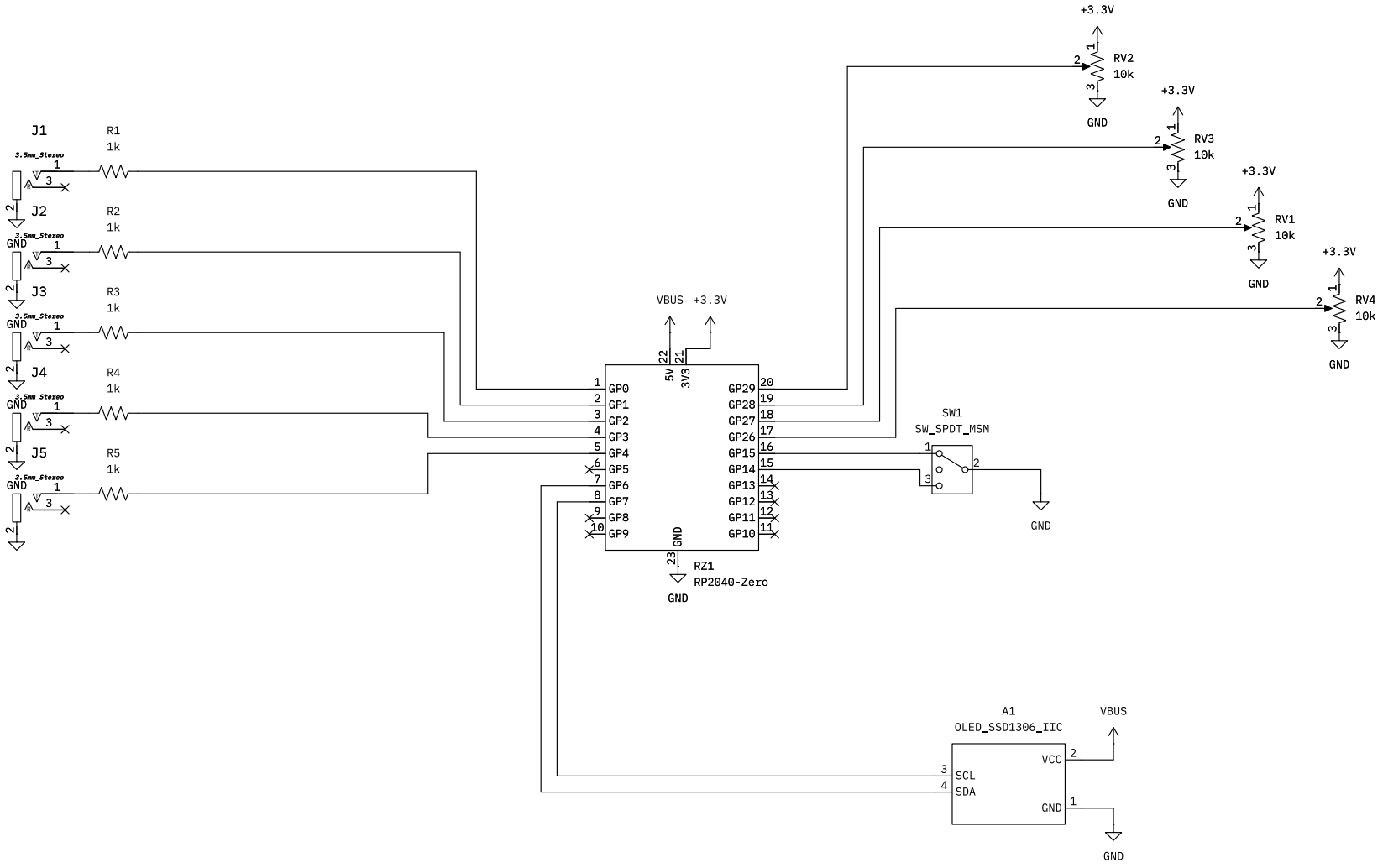

synth-foundry-E01-clock

GNU GPLv3

a master clock with bpm display

and four adjustable tempo divisions

github.com/brianvarren/synth-foundry

rev A

2025-01-26