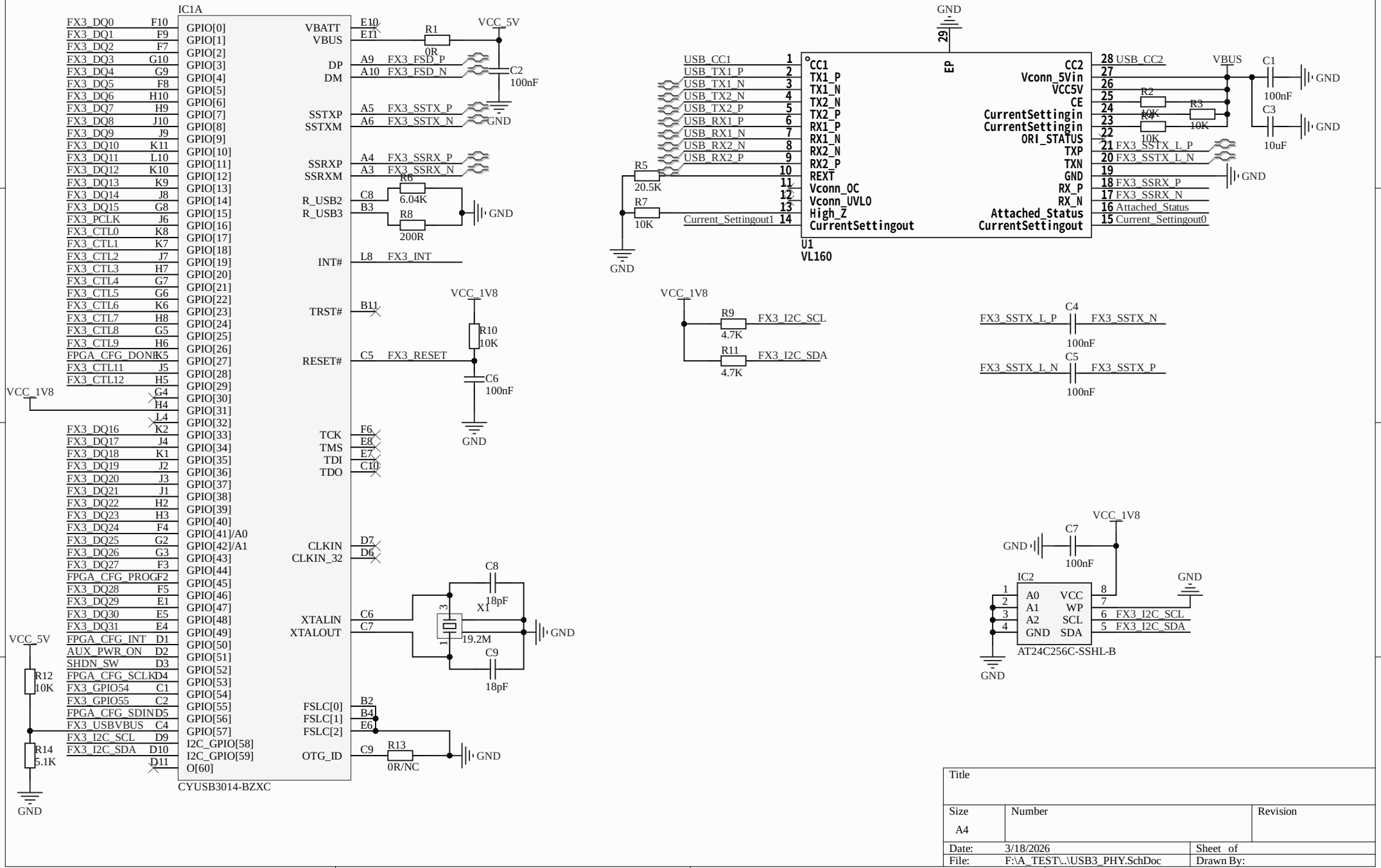
IC1A
CYUSB3014-BZXC
FX3_DQ0 F10
FX3_DQ1 F9
FX3_DQ2 F7
FX3_DQ3 G10
FX3_DQ4 G9
FX3_DQ5 F8
FX3_DQ6 H10
FX3_DQ7 H9
FX3_DQ8 J10
FX3_DQ9 J9
FX3_DQ10 K11
FX3_DQ11 L10
FX3_DQ12 K10
FX3_DQ13 K9
FX3_DQ14 J8
FX3_DQ15 G8
FX3_PCLK J6
FX3_CTL0 K8
FX3_CTL1 K7
FX3_CTL2 J7
FX3_CTL3 H7
FX3_CTL4 G7
FX3_CTL5 G6
FX3_CTL6 K6
FX3_CTL7 H8
FX3_CTL8 G5
FX3_CTL9 H6
FPGA_CFG_DONE K5
FX3_CTL11 J5
FX3_CTL12 H5
VCC_1V8 G4
H4
L4
FX3_DQ16 K2
FX3_DQ17 J4
FX3_DQ18 K1
FX3_DQ19 J2
FX3_DQ20 J3
FX3_DQ21 J1
FX3_DQ22 H2
FX3_DQ23 H3
FX3_DQ24 F4
FX3_DQ25 G2
FX3_DQ26 G3
FX3_DQ27 F3
FPGA_CFG_PROG F2
FX3_DQ28 F5
FX3_DQ29 E1
FX3_DQ30 E5
FX3_DQ31 E4
FPGA_CFG_INT D1
AUX_PWR_ON D2
SHDN_SW D3
FPGA_CFG_SCLK D4
FX3_GPIO54 C1
FX3_GPIO55 C2
FPGA_CFG_SDIN D5
FX3_USBVBUS C4
FX3_I2C_SCL D9
FX3_I2C_SDA D10
D11
GPIO[0]
GPIO[1]
GPIO[2]
GPIO[3]
GPIO[4]
GPIO[5]
GPIO[6]
GPIO[7]
GPIO[8]
GPIO[9]
GPIO[10]
GPIO[11]
GPIO[12]
GPIO[13]
GPIO[14]
GPIO[15]
GPIO[16]
GPIO[17]
GPIO[18]
GPIO[19]
GPIO[20]
GPIO[21]
GPIO[22]
GPIO[23]
GPIO[24]
GPIO[25]
GPIO[26]
GPIO[27]
GPIO[28]
GPIO[29]
GPIO[30]
GPIO[31]
GPIO[32]
GPIO[33]
GPIO[34]
GPIO[35]
GPIO[36]
GPIO[37]
GPIO[38]
GPIO[39]
GPIO[40]
GPIO[41]/A0
GPIO[42]/A1
GPIO[43]
GPIO[44]
GPIO[45]
GPIO[46]
GPIO[47]
GPIO[48]
GPIO[49]
GPIO[50]
GPIO[51]
GPIO[52]
GPIO[53]
GPIO[54]
GPIO[55]
GPIO[56]
GPIO[57]
I2C_GPIO[58]
I2C_GPIO[59]
O[60]
VBATT E10
VBUS E11
R1 0R
VCC_5V
DP A9 FX3_FSD_P
DM A10 FX3_FSD_N
C2 100nF
SSTXP A5 FX3_SSTX_P
SSTXM A6 FX3_SSTX_N
GND
SSRXP A4 FX3_SSRX_P
SSRXM A3 FX3_SSRX_N
R_USB2 C8
R_USB3 B3
R6 6.04K
R8 200R
GND
INT# L8 FX3_INT
VCC_1V8
TRST# B11
R10 10K
RESET# C5 FX3_RESET
C6 100nF
GND
TCK F6
TMS E8
TDI E7
TDO C10
CLKIN D7
CLKIN_32 D6
C8 18pF
X1
XTALIN C6
XTALOUT C7
19.2M
C9 18pF
GND
FSLC[0] B2
FSLC[1] B4
FSLC[2] E6
OTG_ID C9
R13 0R/NC
GND
VCC_5V
R12 10K
R14 5.1K
GND
GND
29
EP
USB_CC1 1 CC1
USB_TX1_P 2 TX1_P
USB_TX1_N 3 TX1_N
USB_TX2_N 4 TX2_N
USB_TX2_P 5 TX2_P
USB_RX1_P 6 RX1_P
USB_RX1_N 7 RX1_N
USB_RX2_N 8 RX2_N
USB_RX2_P 9 RX2_P
10 REXT
11 Vconn_OC
12 Vconn_UVLO
13 High_Z
Current_Settingout1 14 CurrentSettingout
R5 20.5K
R7 10K
GND
U1
VL160
28 CC2 USB_CC2
27 Vconn_5Vin
26 VCC5V
25 CE
24 CurrentSettingin
23 CurrentSettingin
22 ORI_STATUS
21 TXP FX3_SSTX_L_P
20 TXN FX3_SSTX_L_N
19 GND
18 RX_P FX3_SSRX_P
17 RX_N FX3_SSRX_N
16 Attached_Status Attached_Status
15 CurrentSettingout Current_Settingout0
VBUS
C1 100nF
C3 10uF
R2 10K
R3 10K
R4 10K
GND
VCC_1V8
R9 4.7K FX3_I2C_SCL
R11 4.7K FX3_I2C_SDA
FX3_SSTX_L_P C4 100nF FX3_SSTX_N
FX3_SSTX_L_N C5 100nF FX3_SSTX_P
VCC_1V8
C7 100nF
GND
IC2
A0 VCC
A1 WP
A2 SCL
GND SDA
6 FX3_I2C_SCL
5 FX3_I2C_SDA
AT24C256C-SSHL-B
GND
Title
Size A4
Number
Revision
Date: 3/18/2026
Sheet of
File: F:\A_TEST\..\USB3_PHY.SchDoc
Drawn By:

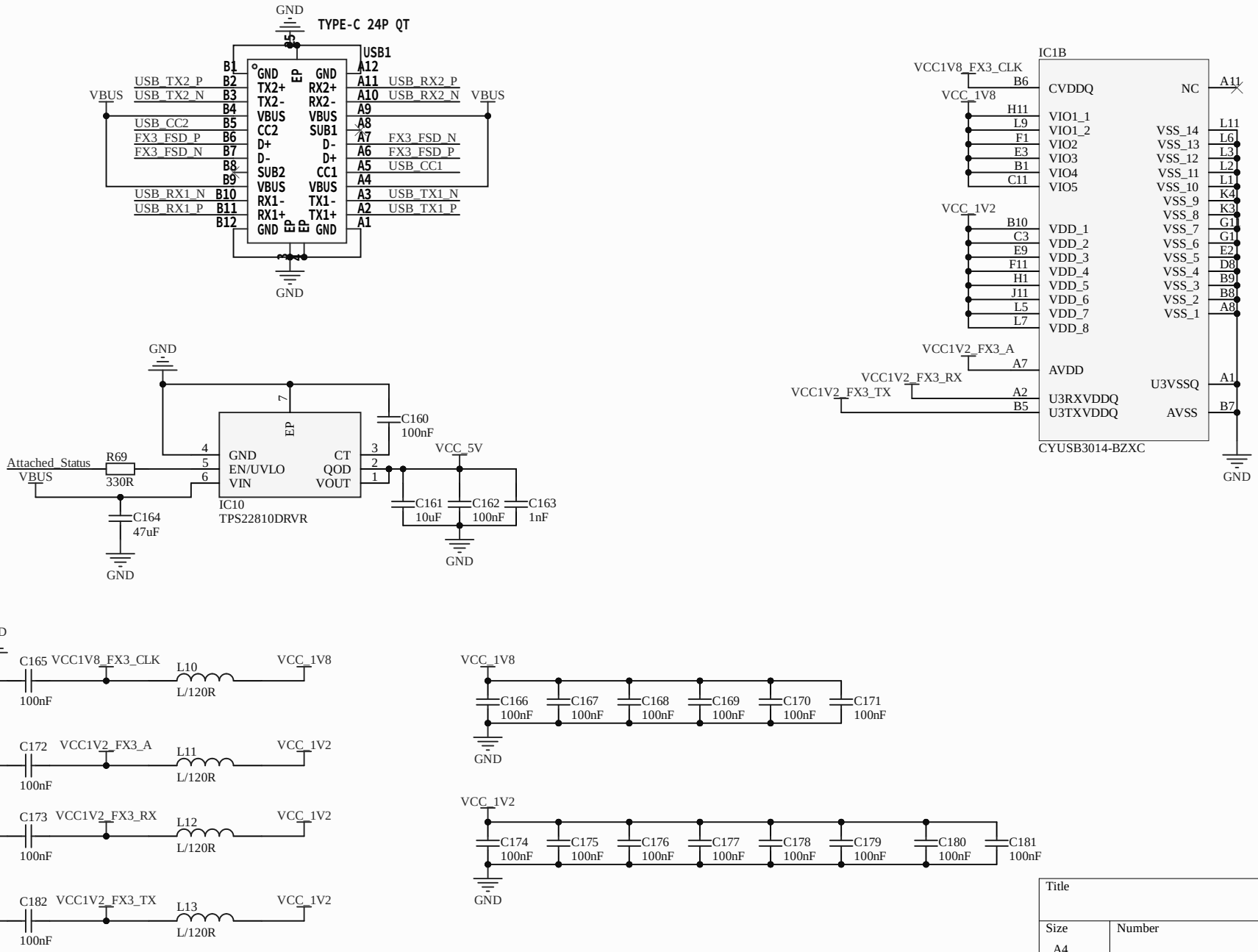

Title		
Size A4	Number	Revision
Date: 3/18/2026		Sheet of
File: F:\A_TEST\..\USB3_PWR.SchDoc		Drawn By:

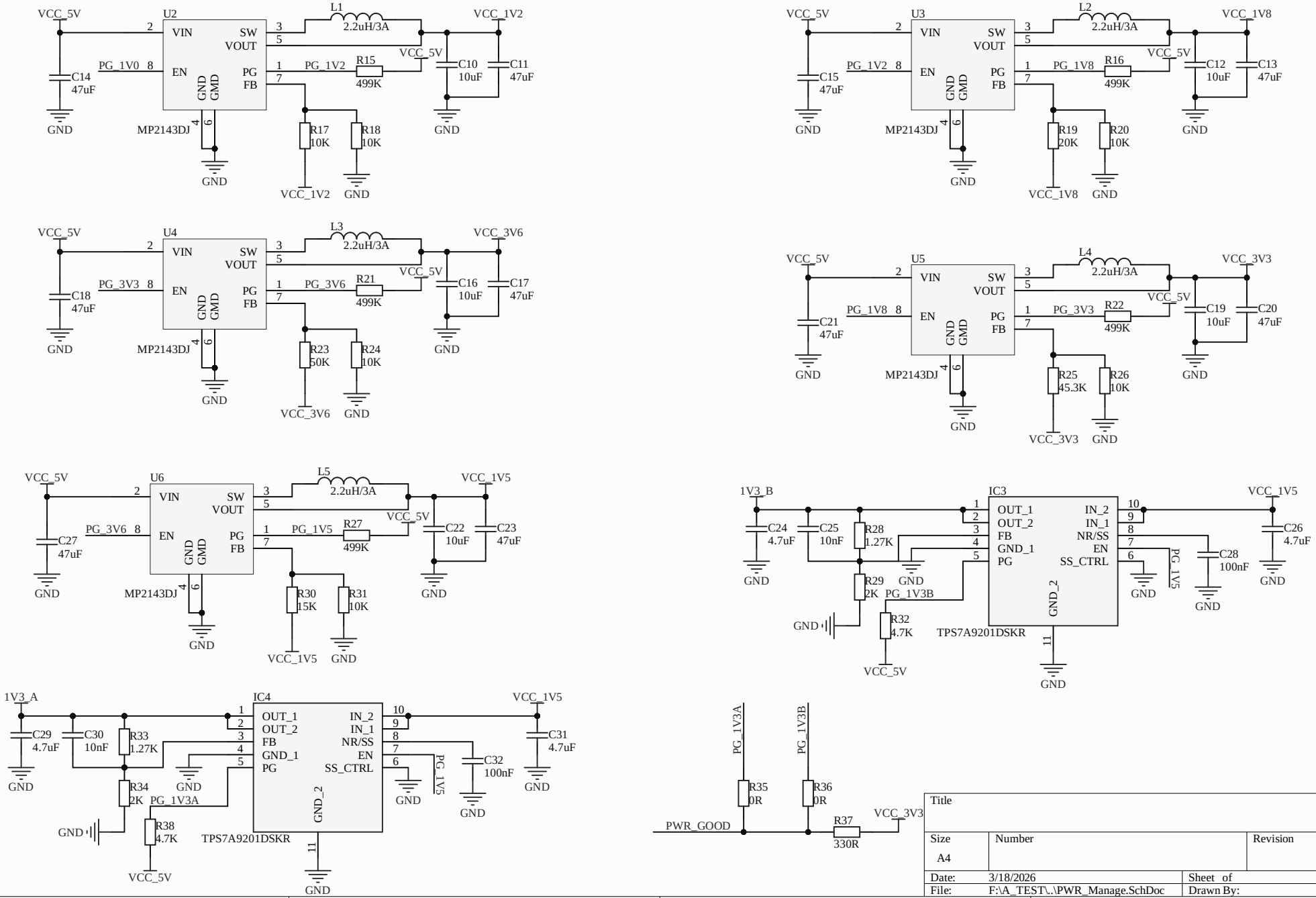
U2
MP2143DJ
VIN
SW
VOUT
EN
PG
FB
GND
GMD
L1
2.2uH/3A
VCC_5V
VCC_1V2
PG_1V0
PG_1V2
R15
499K
C14
47uF
C10
10uF
C11
47uF
R17
10K
R18
10K
U3
L2
2.2uH/3A
VCC_1V8
PG_1V2
PG_1V8
R16
499K
C15
47uF
C12
10uF
C13
47uF
R19
20K
R20
10K
U4
L3
2.2uH/3A
VCC_3V6
PG_3V3
PG_3V6
R21
499K
C18
47uF
C16
10uF
C17
47uF
R23
50K
R24
10K
U5
L4
2.2uH/3A
VCC_3V3
PG_1V8
PG_3V3
R22
499K
C21
47uF
C19
10uF
C20
47uF
R25
45.3K
R26
10K
U6
L5
2.2uH/3A
VCC_1V5
PG_3V6
PG_1V5
R27
499K
C27
47uF
C22
10uF
C23
47uF
R30
15K
R31
10K
1V3_B
IC3
OUT_1
OUT_2
FB
GND_1
PG
IN_2
IN_1
NR/SS
EN
SS_CTRL
GND_2
C24
4.7uF
C25
10nF
R28
1.27K
R29
2K
PG_1V3B
R32
4.7K
C26
4.7uF
C28
100nF
PG_1V5
TPS7A9201DSKR
1V3_A
IC4
C29
4.7uF
C30
10nF
R33
1.27K
R34
2K
PG_1V3A
R38
4.7K
C31
4.7uF
C32
100nF
PG_1V3A
PG_1V3B
R35
0R
R36
0R
PWR_GOOD
R37
330R
VCC_3V3
Title
Size
A4
Number
Revision
Date:
3/18/2026
Sheet of
File:
F:\A_TEST\..\PWR_Manage.SchDoc
Drawn By:

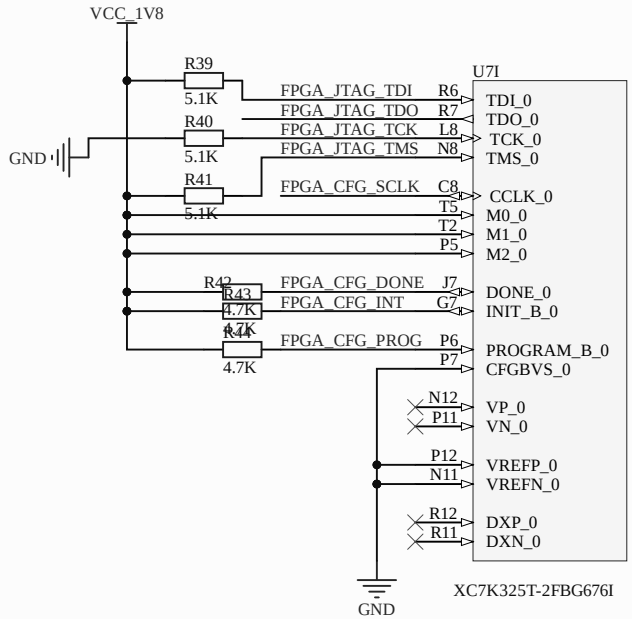

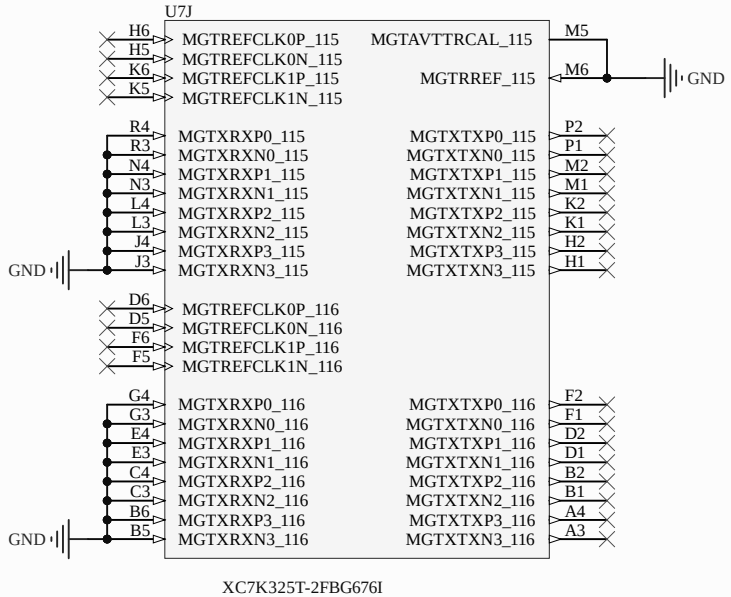

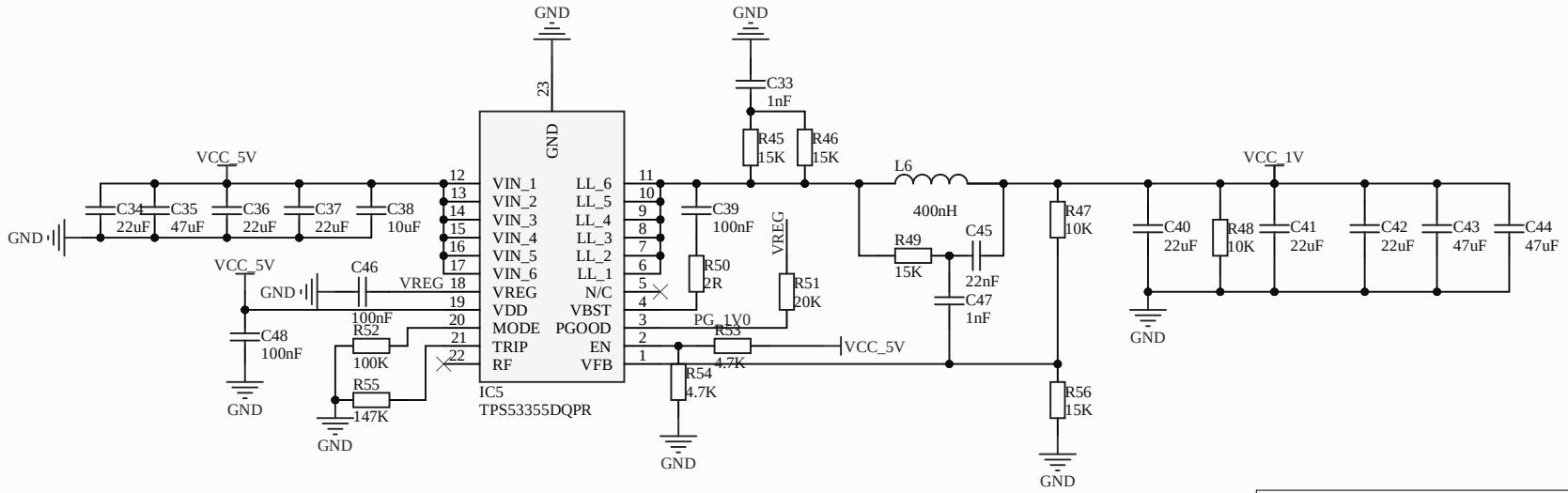

Title		
Size A4	Number	Revision
Date: 3/18/2026		Sheet of
File: F:\A_TEST\..\FPGA_Config.SchDoc		Drawn By:

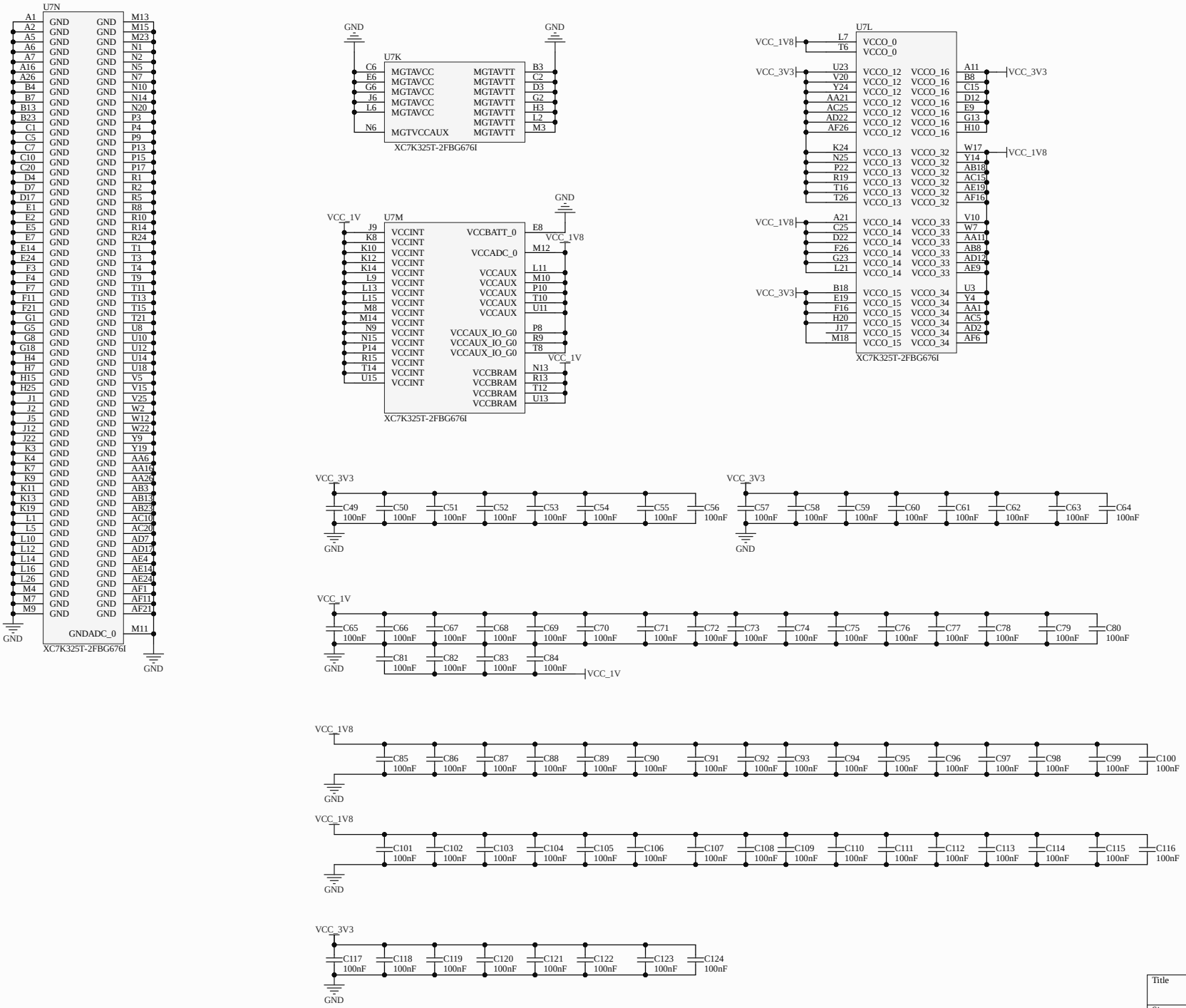

Title		
Size A3	Number	Revision
Date: 3/18/2026		Sheet of
File: F:\A_TEST\..\FPGA_PWR.SchDoc		Drawn By:

U7A

BANK 12

IO_0_12	U21
IO_L1P_T0_12	U22
IO_L1N_T0_12	V22
IO_L2P_T0_12	U24
IO_L2N_T0_12	U25
IO_L3P_T0_DQS_12	V23
IO_L3N_T0_DQS_12	V24
IO_L4P_T0_12	U26
IO_L4N_T0_12	V26
IO_L5P_T0_12	W25
IO_L5N_T0_12	W26
IO_L6P_T0_12	V21
IO_L6N_T0_VREF_12	W21
IO_L7P_T1_12	AA25
IO_L7N_T1_12	AB25
IO_L8P_T1_12	W23
IO_L8N_T1_12	W24
IO_L9P_T1_DQS_12	AB26
IO_L9N_T1_DQS_12	AC26
IO_L10P_T1_12	Y25
IO_L10N_T1_12	Y26
IO_L11P_T1_SRCC_12	AA23
IO_L11N_T1_SRCC_12	AB24
IO_L12P_T1_MRCC_12	Y23
IO_L12N_T1_MRCC_12	AA24
IO_L13P_T2_MRCC_12	Y22
IO_L13N_T2_MRCC_12	AA22
IO_L14P_T2_SRCC_12	AC23
IO_L14N_T2_SRCC_12	AC24
IO_L15P_T2_DQS_12	W20
IO_L15N_T2_DQS_12	Y21
IO_L16P_T2_12	AD23
IO_L16N_T2_12	AD24
IO_L17P_T2_12	AB22
IO_L17N_T2_12	AC22
IO_L18P_T2_12	AB21
IO_L18N_T2_12	AC21
IO_L19P_T3_12	AD21
IO_L19N_T3_VREF_12	AE21
IO_L20P_T3_12	AF24
IO_L20N_T3_12	AF25
IO_L21P_T3_DQS_12	AD26
IO_L21N_T3_DQS_12	AE26
IO_L22P_T3_12	AE23
IO_L22N_T3_12	AF23
IO_L23P_T3_12	AD25
IO_L23N_T3_12	AE25
IO_L24P_T3_12	AE22
IO_L24N_T3_12	AF22
IO_25_12	Y20

XC7K325T-2FBG676I

U7B

BANK 13

IO_0_13	N16
IO_L1P_T0_13	R25
IO_L1N_T0_13	R26
IO_L2P_T0_13	R26
IO_L2N_T0_13	P26
IO_L3P_T0_DQS_13	M25
IO_L3N_T0_DQS_13	P25
IO_L4P_T0_13	P24
IO_L4N_T0_13	N24
IO_L5P_T0_13	N26
IO_L5N_T0_13	M26
IO_L6P_T0_13	R25
IO_L6N_T0_VREF_13	P25
IO_L7P_T1_13	N19
IO_L7N_T1_13	M20
IO_L8P_T1_13	M24
IO_L8N_T1_13	L24
IO_L9P_T1_DQS_13	P19
IO_L9N_T1_DQS_13	P20
IO_L10P_T1_13	M21
IO_L10N_T1_13	M22
IO_L11P_T1_SRCC_13	P23
IO_L11N_T1_SRCC_13	N23
IO_L12P_T1_MRCC_13	N21
IO_L12N_T1_MRCC_13	N22
IO_L13P_T2_MRCC_13	R21
IO_L13N_T2_MRCC_13	P21
IO_L14P_T2_SRCC_13	R22
IO_L14N_T2_SRCC_13	R23
IO_L15P_T2_DQS_13	L24
IO_L15N_T2_DQS_13	L25
IO_L16P_T2_13	L20
IO_L16N_T2_13	K20
IO_L17P_T2_13	L22
IO_L17N_T2_13	L23
IO_L18P_T2_13	J19
IO_L18N_T2_13	J20
IO_L19P_T3_13	J18
IO_L19N_T3_VREF_13	J19
IO_L20P_T3_13	P16
IO_L20N_T3_13	N17
IO_L21P_T3_DQS_13	R16
IO_L21N_T3_DQS_13	R17
IO_L22P_T3_13	N18
IO_L22N_T3_13	M19
IO_L23P_T3_13	U17
IO_L23N_T3_13	T17
IO_L24P_T3_13	R18
IO_L24N_T3_13	P18
IO_25_13	U16

XC7K325T-2FBG676I

U7C

BANK 14

IO_0_14	K21	
IO_L1P_T0_D00_MOSI_14	B24	
IO_L1N_T0_D01_DIN_14	A25	R57 0R — FPGA_CFG_SDIN
IO_L2P_T0_D02_14	B22	
IO_L2N_T0_D03_14	A22	
IO_L3P_T0_DQS_PUDC_B_14	B25	R58 10K — VCC_1V8
IO_L3N_T0_DQS_EMCCLK_14	B26	
IO_L4P_T0_D04_14	A23	RF_CTL_IN3
IO_L4N_T0_D05_14	A24	RF_CTL_IN0
IO_L5P_T0_D06_14	D26	RF_CTL_OUT6
IO_L5N_T0_D07_14	C26	RF_CTL_OUT1
IO_L6P_T0_FCS_B_14	C23	RF_CTL_OUT4
IO_L6N_T0_D08_VREF_14	C24	RF_CTL_OUT2
IO_L7P_T1_D09_14	D21	RF_CTL_OUT3
IO_L7N_T1_D10_14	C22	RF_CTL_OUT0
IO_L8P_T1_D11_14	B20	RF_SPI_DI
IO_L8N_T1_D12_14	A20	RF_SPI_CLK
IO_L9P_T1_DQS_14	C21	RF_SYNC
IO_L9N_T1_DQS_D13_14	C22	RF_ENABLE
IO_L10P_T1_D14_14	C21	RF_CTL_IN2
IO_L10N_T1_D15_14	B21	RF_CTL_IN1
IO_L11P_T1_SRCC_14	D23	RF_CTL_OUT7
IO_L11N_T1_SRCC_14	D24	RF_CTL_OUT5
IO_L12P_T1_MRCC_14	E22	RF_SPI_EN
IO_L12N_T1_MRCC_14	E23	RF_EN_AGC
IO_L13P_T2_MRCC_14	G22	RF_SPI_DO
IO_L13N_T2_MRCC_14	F23	RF_RESET
IO_L14P_T2_SRCC_14	G24	RF_TXnRX
IO_L14N_T2_SRCC_14	F24	RF_CLK_OUT
IO_L15P_T2_DQS_RDWR_B_14	E25	
IO_L15N_T2_DQS_DOUT_CSO_B_14	D25	
IO_L16P_T2_CSI_B_14	G25	
IO_L16N_T2_A15_D31_14	G26	
IO_L17P_T2_A14_D30_14	F25	
IO_L17N_T2_A13_D29_14	E26	
IO_L18P_T2_A12_D28_14	J26	
IO_L18N_T2_A11_D27_14	H26	
IO_L19P_T3_A10_D26_14	H21	
IO_L19N_T3_A09_D25_VREF_14	G21	
IO_L20P_T3_A08_D24_14	H23	
IO_L20N_T3_A07_D23_14	H24	
IO_L21P_T3_DQS_14	J21	
IO_L21N_T3_DQS_A06_D22_14	H22	
IO_L22P_T3_A05_D21_14	J24	
IO_L22N_T3_A04_D20_14	J25	
IO_L23P_T3_A03_D19_14	L22	
IO_L23N_T3_A02_D18_14	K22	
IO_L24P_T3_A01_D17_14	K23	
IO_L24N_T3_A00_D16_14	L23	
IO_25_14		

XC7K325T-2FBG676I

U7D

BANK 15

IO_0_15	K15
IO_L1P_T0_AD0P_15	C16
IO_L1N_T0_AD0N_15	B16
IO_L2P_T0_AD8P_15	A18
IO_L2N_T0_AD8N_15	A19
IO_L3P_T0_DQS_AD1P_15	B17
IO_L3N_T0_DQS_AD1N_15	A17
IO_L4P_T0_AD9P_15	C19
IO_L4N_T0_AD9N_15	B19
IO_L5P_T0_AD2P_15	C17
IO_L5N_T0_AD2N_15	C18
IO_L6P_T0_15	D15
IO_L6N_T0_VREF_15	D16
IO_L7P_T1_AD10P_15	H16
IO_L7N_T1_AD10N_15	G16
IO_L8P_T1_AD3P_15	G15
IO_L8N_T1_AD3N_15	F15
IO_L9P_T1_DQS_AD11P_15	J15
IO_L9N_T1_DQS_AD11N_15	J16
IO_L10P_T1_AD4P_15	E15
IO_L10N_T1_AD4N_15	E16
IO_L11P_T1_SRCC_AD12P_15	G17
IO_L11N_T1_SRCC_AD12N_15	F18
IO_L12P_T1_MRCC_AD5P_15	F17
IO_L12N_T1_MRCC_AD5N_15	E17
IO_L13P_T2_MRCC_15	E18
IO_L13N_T2_MRCC_15	D18
IO_L14P_T2_SRCC_15	H17
IO_L14N_T2_SRCC_15	H18
IO_L15P_T2_DQS_15	D19
IO_L15N_T2_DQS_ADV_B_15	D20
IO_L16P_T2_A28_15	G19
IO_L16N_T2_A27_15	F20
IO_L17P_T2_A26_15	E19
IO_L17N_T2_A25_15	E20
IO_L18P_T2_A24_15	H19
IO_L18N_T2_A23_15	G20
IO_L19P_T3_A22_15	K20
IO_L19N_T3_A21_VREF_15	J20
IO_L20P_T3_A20_15	J18
IO_L20N_T3_A19_15	J19
IO_L21P_T3_DQS_15	L19
IO_L21N_T3_DQS_A18_15	L20
IO_L22P_T3_A17_15	K16
IO_L22N_T3_A16_15	K17
IO_L23P_T3_FOE_B_15	M17
IO_L23N_T3_FWE_B_15	L18
IO_L24P_T3_RS1_15	L17
IO_L24N_T3_RS0_15	K18
IO_25_15	M16

XC7K325T-2FBG676I

U7E

BANK 16

IO_0_16	J8	Current_Settingout0
IO_L1P_T0_16	H9	Current_Settingout1
IO_L1N_T0_16	H8	
IO_L2P_T0_16	G10	SRX2_TX
IO_L2N_T0_16	G9	
IO_L3P_T0_DQS_16	J13	cLED2_TRX_R
IO_L3N_T0_DQS_16	H13	cLED2_TRX_G
IO_L4P_T0_16	J11	
IO_L4N_T0_16	J10	cTXDRV_PWEN2
IO_L5P_T0_16	H14	tx_bandsel_a
IO_L5N_T0_16	G14	
IO_L6P_T0_16	H12	
IO_L6N_T0_VREF_16	H11	SFDX2_TX
IO_L7P_T1_16	F9	CLK_LED_G
IO_L7N_T1_16	F8	CLK_LED_R
IO_L8P_T1_16	D9	REF_SEL
IO_L8N_T1_16	D8	PLL_LOCK
IO_L9P_T1_DQS_16	A9	PLL_SCLK
IO_L9N_T1_DQS_16	A8	PLL_CE
IO_L10P_T1_16	C9	PLL_MOSI
IO_L10N_T1_16	B9	
IO_L11P_T1_SRCC_16	G11	PPS_IN_EXT
IO_L11N_T1_SRCC_16	F10	USER_LED_G
IO_L12P_T1_MRCC_16	E10	USER_LED_R
IO_L12N_T1_MRCC_16	D10	cLED2_RX2_G
IO_L13P_T2_MRCC_16	C12	SRX1_TX
IO_L13N_T2_MRCC_16	C11	cLED1_TRX_G
IO_L14P_T2_SRCC_16	E11	cLED2_RX2_R
IO_L14N_T2_SRCC_16	D11	
IO_L15P_T2_DQS_16	F14	rx_bandsel_a
IO_L15N_T2_DQS_16	E13	rx_bandsel_c
IO_L16P_T2_16	G12	tx_bandsel_b
IO_L16N_T2_16	F12	rx_bandsel_b
IO_L17P_T2_16	D14	
IO_L17N_T2_16	D13	cTXDRV_PWEN1
IO_L18P_T2_16	E13	cLED1_RX2_G
IO_L18N_T2_16	E12	cLED1_TRX_R
IO_L19P_T3_16	C14	cLED1_RX2_R
IO_L19N_T3_VREF_16	C13	
IO_L20P_T3_16	B12	SFDX1_TX
IO_L20N_T3_16	B11	Work_Status
IO_L21P_T3_DQS_16	B14	GPS_TXD
IO_L21N_T3_DQS_16	A14	GPS_RXD
IO_L22P_T3_16	B10	SFDX2_RX
IO_L22N_T3_16	A10	SRX2_RX
IO_L23P_T3_16	B15	PPS_INT
IO_L23N_T3_16	A15	SFDX1_RX
IO_L24P_T3_16	A13	SRX1_RX
IO_L24N_T3_16	A12	
IO_25_16	J14	

XC7K325T-2FBG676I

Title		
Size A3	Number	Revision
Date: 3/18/2026	Sheet of	
File: F:\A_TEST\..\FPGA_HR_BANK.SchDoc	Drawn By:	

U7F

BANK 32

IO_0_VRN_32	V13	
IO_L1P_T0_32	AE17	
IO_L1N_T0_32	AF17	
IO_L2P_T0_32	AF14	
IO_L2N_T0_32	AF15	
IO_L3P_T0_DQS_32	AE18	
IO_L3N_T0_DQS_32	AF18	
IO_L4P_T0_32	AD15	
IO_L4N_T0_32	AE15	
IO_L5P_T0_32	AF19	RF_TX_D0_P
IO_L5N_T0_32	AF20	RF_TX_D0_N
IO_L6P_T0_32	AD16	RF_TX_D2_P
IO_L6N_T0_VREF_32	AE16	RF_TX_D2_N
IO_L7P_T1_32	AA14	RF_RX_D2_P
IO_L7N_T1_32	AA15	RF_RX_D2_N
IO_L8P_T1_32	AC14	RF_TX_D4_P
IO_L8N_T1_32	AD14	RF_TX_D4_N
IO_L9P_T1_DQS_32	Y15	RF_RX_D4_P
IO_L9N_T1_DQS_32	Y16	RF_RX_D4_N
IO_L10P_T1_32	AB14	RF_TX_D3_P
IO_L10N_T1_32	AB15	RF_TX_D3_N
IO_L11P_T1_SRCC_32	AA17	FPGA_CLK_P
IO_L11N_T1_SRCC_32	AA18	FPGA_CLK_N
IO_L12P_T1_MRCC_32	AB16	RF_DATA_CLK_P
IO_L12N_T1_MRCC_32	AC16	RF_DATA_CLK_N
IO_L13P_T2_MRCC_32	AC18	RF_FB_CLK_P
IO_L13N_T2_MRCC_32	AD18	RF_FB_CLK_N
IO_L14P_T2_SRCC_32	AB17	RF_TX_FRAME_P
IO_L14N_T2_SRCC_32	AC17	RF_TX_FRAME_N
IO_L15P_T2_DQS_32	AD20	RF_TX_D1_P
IO_L15N_T2_DQS_32	AE20	RF_TX_D1_N
IO_L16P_T2_32	AA19	RF_RX_FRAME_P
IO_L16N_T2_32	AA20	RF_RX_FRAME_N
IO_L17P_T2_32	AC19	RF_TX_D5_P
IO_L17N_T2_32	AD19	RF_TX_D5_N
IO_L18P_T2_32	AB19	RF_RX_D5_P
IO_L18N_T2_32	AB20	RF_RX_D5_N
IO_L19P_T3_32	Y17	RF_RX_D0_P
IO_L19N_T3_VREF_32	Y18	RF_RX_D0_N
IO_L20P_T3_32	V16	RF_RX_D1_P
IO_L20N_T3_32	V17	RF_RX_D1_N
IO_L21P_T3_DQS_32	W18	RF_RX_D3_P
IO_L21N_T3_DQS_32	W19	RF_RX_D3_N
IO_L22P_T3_32	W15	
IO_L22N_T3_32	W16	
IO_L23P_T3_32	V18	
IO_L23N_T3_32	V19	
IO_L24P_T3_32	V14	
IO_L24N_T3_32	W14	
IO_25_VRP_32	W13	

XC7K325T-2FBG676I

U7G

BANK 33

IO_0_VRN_33	U9	
IO_L1P_T0_33	Y11	
IO_L1N_T0_33	W11	
IO_L2P_T0_33	V8	
IO_L2N_T0_33	V7	
IO_L3P_T0_DQS_33	W10	
IO_L3N_T0_DQS_33	W9	
IO_L4P_T0_33	Y8	
IO_L4N_T0_33	Y7	
IO_L5P_T0_33	Y11	
IO_L5N_T0_33	Y10	
IO_L6P_T0_33	V9	
IO_L6N_T0_VREF_33	W8	
IO_L7P_T1_33	AE7	
IO_L7N_T1_33	AF7	
IO_L8P_T1_33	AA8	
IO_L8N_T1_33	AA7	
IO_L9P_T1_DQS_33	AC8	
IO_L9N_T1_DQS_33	AD8	
IO_L10P_T1_33	AB7	
IO_L10N_T1_33	AC7	
IO_L11P_T1_SRCC_33	AA9	
IO_L11N_T1_SRCC_33	AB9	
IO_L12P_T1_MRCC_33	AC9	
IO_L12N_T1_MRCC_33	AD9	
IO_L13P_T2_MRCC_33	AB11	
IO_L13N_T2_MRCC_33	AC11	
IO_L14P_T2_SRCC_33	AA10	
IO_L14N_T2_SRCC_33	AB10	
IO_L15P_T2_DQS_33	AB12	FPGA_GPIO8
IO_L15N_T2_DQS_33	AC12	FPGA_GPIO7
IO_L16P_T2_33	AA13	FPGA_GPIO5
IO_L16N_T2_33	AA12	FPGA_GPIO9
IO_L17P_T2_33	AC13	FPGA_GPIO1
IO_L17N_T2_33	AD13	FPGA_GPIO0
IO_L18P_T2_33	Y13	
IO_L18N_T2_33	Y12	
IO_L19P_T3_33	AD11	FPGA_GPIO6
IO_L19N_T3_VREF_33	AE11	FPGA_GPIO4
IO_L20P_T3_33	AD10	
IO_L20N_T3_33	AE10	
IO_L21P_T3_DQS_33	AE12	FPGA_GPIO3
IO_L21N_T3_DQS_33	AF12	FPGA_GPIO2
IO_L22P_T3_33	AE8	
IO_L22N_T3_33	AF8	
IO_L23P_T3_33	AE13	
IO_L23N_T3_33	AF13	
IO_L24P_T3_33	AF10	
IO_L24N_T3_33	AF9	
IO_25_VRP_33	Y12	

XC7K325T-2FBG676I

U7H

BANK 34

IO_0_VRN_34	U4	FX3_GPIO54
IO_L1P_T0_34	U6	FX3_DQ0
IO_L1N_T0_34	U5	FX3_DQ3
IO_L2P_T0_34	U2	AUX_PWR_ON
IO_L2N_T0_34	U1	FX3_DQ5
IO_L3P_T0_DQS_34	W6	FX3_DQ8
IO_L3N_T0_DQS_34	W5	SHDN_SW
IO_L4P_T0_34	V3	FX3_DQ4
IO_L4N_T0_34	W3	FX3_DQ24
IO_L5P_T0_34	U7	FX3_DQ29
IO_L5N_T0_34	V6	FX3_DQ2
IO_L6P_T0_34	V4	FX3_DQ6
IO_L6N_T0_VREF_34	W4	FX3_DQ7
IO_L7P_T1_34	Y3	FX3_DQ13
IO_L7N_T1_34	Y2	FX3_CTL5
IO_L8P_T1_34	V2	FX3_DQ30
IO_L8N_T1_34	V1	FX3_DQ31
IO_L9P_T1_DQS_34	AB1	FX3_CTL9
IO_L9N_T1_DQS_34	AC1	FX3_DQ14
IO_L10P_T1_34	W1	FX3_DQ9
IO_L10N_T1_34	Y1	FX3_DQ28
IO_L11P_T1_SRCC_34	AB2	FX3_DQ11
IO_L11N_T1_SRCC_34	AC2	FX3_CTL3
IO_L12P_T1_MRCC_34	AA3	FX3_DQ1
IO_L12N_T1_MRCC_34	AA2	FX3_DQ15
IO_L13P_T2_MRCC_34	AA4	FX3_CTL0
IO_L13N_T2_MRCC_34	AB4	FX3_CTL12
IO_L14P_T2_SRCC_34	AC4	FX3_CTL11
IO_L14N_T2_SRCC_34	AC3	FX3_CTL8
IO_L15P_T2_DQS_34	AA5	FX3_DQ12
IO_L15N_T2_DQS_34	AB5	FX3_INT
IO_L16P_T2_34	AB6	FX3_CTL4
IO_L16N_T2_34	AC6	FX3_DQ19
IO_L17P_T2_34	Y6	FX3_DQ10
IO_L17N_T2_34	Y5	FX3_CTL7
IO_L18P_T2_34	AD6	FX3_DQ18
IO_L18N_T2_34	AD5	FX3_DQ17
IO_L19P_T3_34	AD4	FX3_DQ26
IO_L19N_T3_VREF_34	AD3	FX3_CTL6
IO_L20P_T3_34	AD1	FX3_PCLK
IO_L20N_T3_34	AE1	FX3_CTL2
IO_L21P_T3_DQS_34	AF5	FX3_DQ27
IO_L21N_T3_DQS_34	AF4	FX3_DQ25
IO_L22P_T3_34	AE3	FX3_DQ22
IO_L22N_T3_34	AE2	FX3_CTL1
IO_L23P_T3_34	AE6	FX3_DQ16
IO_L23N_T3_34	AE5	FX3_DQ20
IO_L24P_T3_34	AF3	FX3_DQ21
IO_L24N_T3_34	AF2	FX3_DQ23
IO_25_VRP_34	T7	FX3_GPIO55

XC7K325T-2FBG676I

Title		
Size A4	Number	Revision
Date: 3/18/2026	Sheet of	
File: F:\A_TEST\..\FPGA_HP_BANK.SchDoc	Drawn By:	

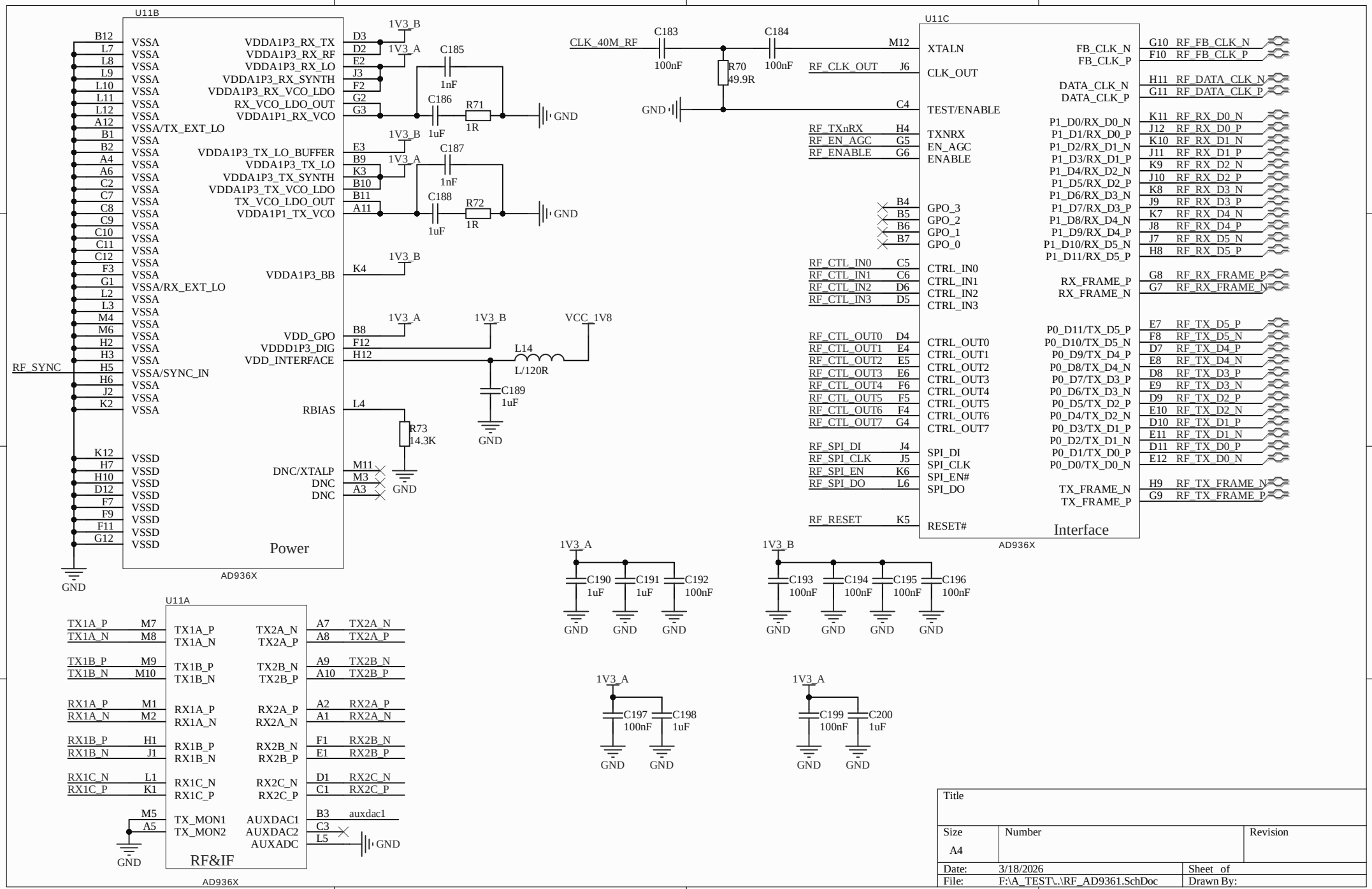
U11B
Power
AD936X
VSSA
VSSA/TX_EXT_LO
VSSA/RX_EXT_LO
VSSA/SYNC_IN
VSSD
VDDA1P3_RX_TX
VDDA1P3_RX_RF
VDDA1P3_RX_LO
VDDA1P3_RX_SYNTH
VDDA1P3_RX_VCO_LDO
RX_VCO_LDO_OUT
VDDA1P1_RX_VCO
VDDA1P3_TX_LO_BUFFER
VDDA1P3_TX_LO
VDDA1P3_TX_SYNTH
VDDA1P3_TX_VCO_LDO
TX_VCO_LDO_OUT
VDDA1P1_TX_VCO
VDDA1P3_BB
VDD_GPO
VDDD1P3_DIG
VDD_INTERFACE
RBIAS
DNC/XTALP
DNC
RF_SYNC
1V3_A
1V3_B
VCC_1V8
C185 1nF
C186 1uF
R71 1R
C187 1nF
C188 1uF
R72 1R
L14 L/120R
C189 1uF
R73 14.3K
GND
U11C
Interface
AD936X
CLK_40M_RF
C183 100nF
C184 100nF
R70 49.9R
XTALN
CLK_OUT
TEST/ENABLE
TXNRX
EN_AGC
ENABLE
GPO_3
GPO_2
GPO_1
GPO_0
CTRL_IN0
CTRL_IN1
CTRL_IN2
CTRL_IN3
CTRL_OUT0
CTRL_OUT1
CTRL_OUT2
CTRL_OUT3
CTRL_OUT4
CTRL_OUT5
CTRL_OUT6
CTRL_OUT7
SPI_DI
SPI_CLK
SPI_EN#
SPI_DO
RESET#
RF_CLK_OUT
RF_TXnRX
RF_EN_AGC
RF_ENABLE
RF_CTL_IN0
RF_CTL_IN1
RF_CTL_IN2
RF_CTL_IN3
RF_CTL_OUT0
RF_CTL_OUT1
RF_CTL_OUT2
RF_CTL_OUT3
RF_CTL_OUT4
RF_CTL_OUT5
RF_CTL_OUT6
RF_CTL_OUT7
RF_SPI_DI
RF_SPI_CLK
RF_SPI_EN
RF_SPI_DO
RF_RESET
FB_CLK_N
FB_CLK_P
DATA_CLK_N
DATA_CLK_P
P1_D0/RX_D0_N
P1_D1/RX_D0_P
P1_D2/RX_D1_N
P1_D3/RX_D1_P
P1_D4/RX_D2_N
P1_D5/RX_D2_P
P1_D6/RX_D3_N
P1_D7/RX_D3_P
P1_D8/RX_D4_N
P1_D9/RX_D4_P
P1_D10/RX_D5_N
P1_D11/RX_D5_P
RX_FRAME_P
RX_FRAME_N
P0_D11/TX_D5_P
P0_D10/TX_D5_N
P0_D9/TX_D4_P
P0_D8/TX_D4_N
P0_D7/TX_D3_P
P0_D6/TX_D3_N
P0_D5/TX_D2_P
P0_D4/TX_D2_N
P0_D3/TX_D1_P
P0_D2/TX_D1_N
P0_D1/TX_D0_P
P0_D0/TX_D0_N
TX_FRAME_N
TX_FRAME_P
RF_FB_CLK_N
RF_FB_CLK_P
RF_DATA_CLK_N
RF_DATA_CLK_P
RF_RX_D0_N
RF_RX_D0_P
RF_RX_D1_N
RF_RX_D1_P
RF_RX_D2_N
RF_RX_D2_P
RF_RX_D3_N
RF_RX_D3_P
RF_RX_D4_N
RF_RX_D4_P
RF_RX_D5_N
RF_RX_D5_P
RF_RX_FRAME_P
RF_RX_FRAME_N
RF_TX_D5_P
RF_TX_D5_N
RF_TX_D4_P
RF_TX_D4_N
RF_TX_D3_P
RF_TX_D3_N
RF_TX_D2_P
RF_TX_D2_N
RF_TX_D1_P
RF_TX_D1_N
RF_TX_D0_P
RF_TX_D0_N
RF_TX_FRAME_N
RF_TX_FRAME_P
C190 1uF
C191 1uF
C192 100nF
C193 100nF
C194 100nF
C195 100nF
C196 100nF
C197 100nF
C198 1uF
C199 100nF
C200 1uF
U11A
RF&IF
AD936X
TX1A_P
TX1A_N
TX1B_P
TX1B_N
RX1A_P
RX1A_N
RX1B_P
RX1B_N
RX1C_N
RX1C_P
TX_MON1
TX_MON2
TX2A_N
TX2A_P
TX2B_N
TX2B_P
RX2A_P
RX2A_N
RX2B_N
RX2B_P
RX2C_N
RX2C_P
AUXDAC1
AUXDAC2
AUXADC
auxdac1
Title
Size
A4
Number
Revision
Date: 3/18/2026
Sheet of
File: F:\A_TEST\..\RF_AD9361.SchDoc
Drawn By:

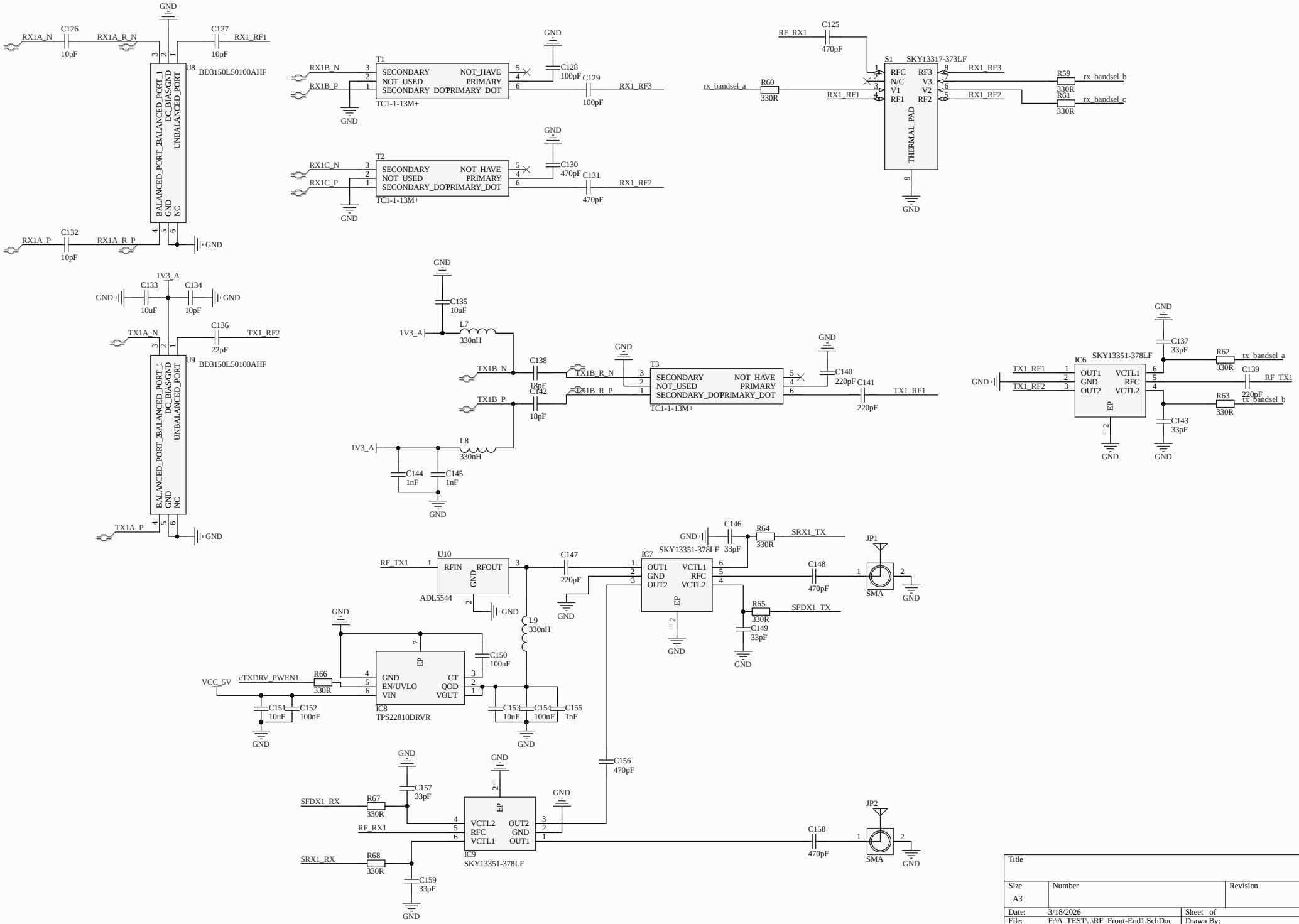

Title		
Size A3	Number	Revision
Date: 3/18/2026		Sheet of
File: F:\A_TEST\..\RF_Front-End1.SchDoc		Drawn By:

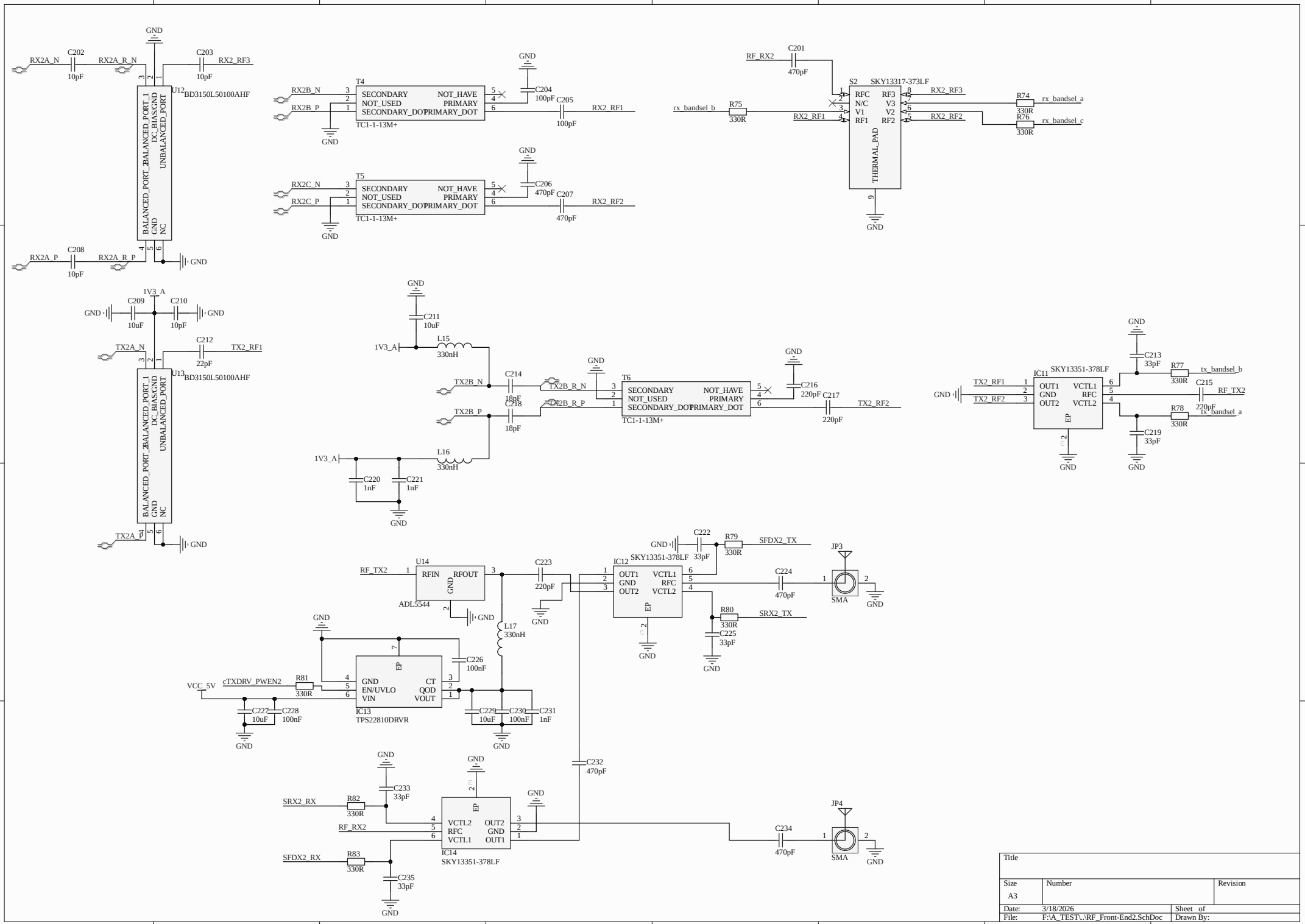

Title		
Size A3	Number	Revision
Date: 3/18/2026		Sheet of
File: F:\A_TEST\..\RF_Front-End2.SchDoc		Drawn By:

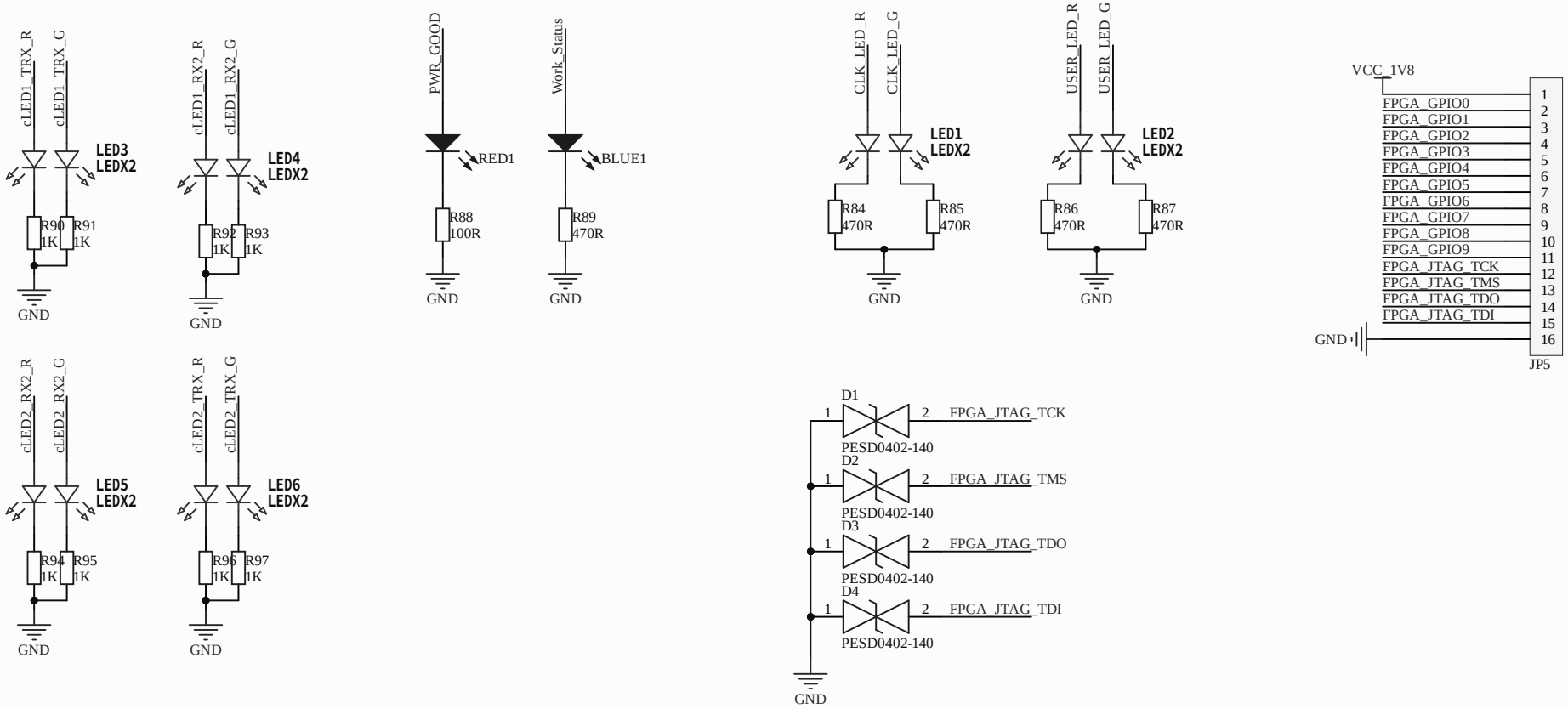

Title		
Size A4	Number	Revision
Date: 3/18/2026		Sheet of
File: F:\A_TEST\..\EXT_Interface.SchDoc		Drawn By:

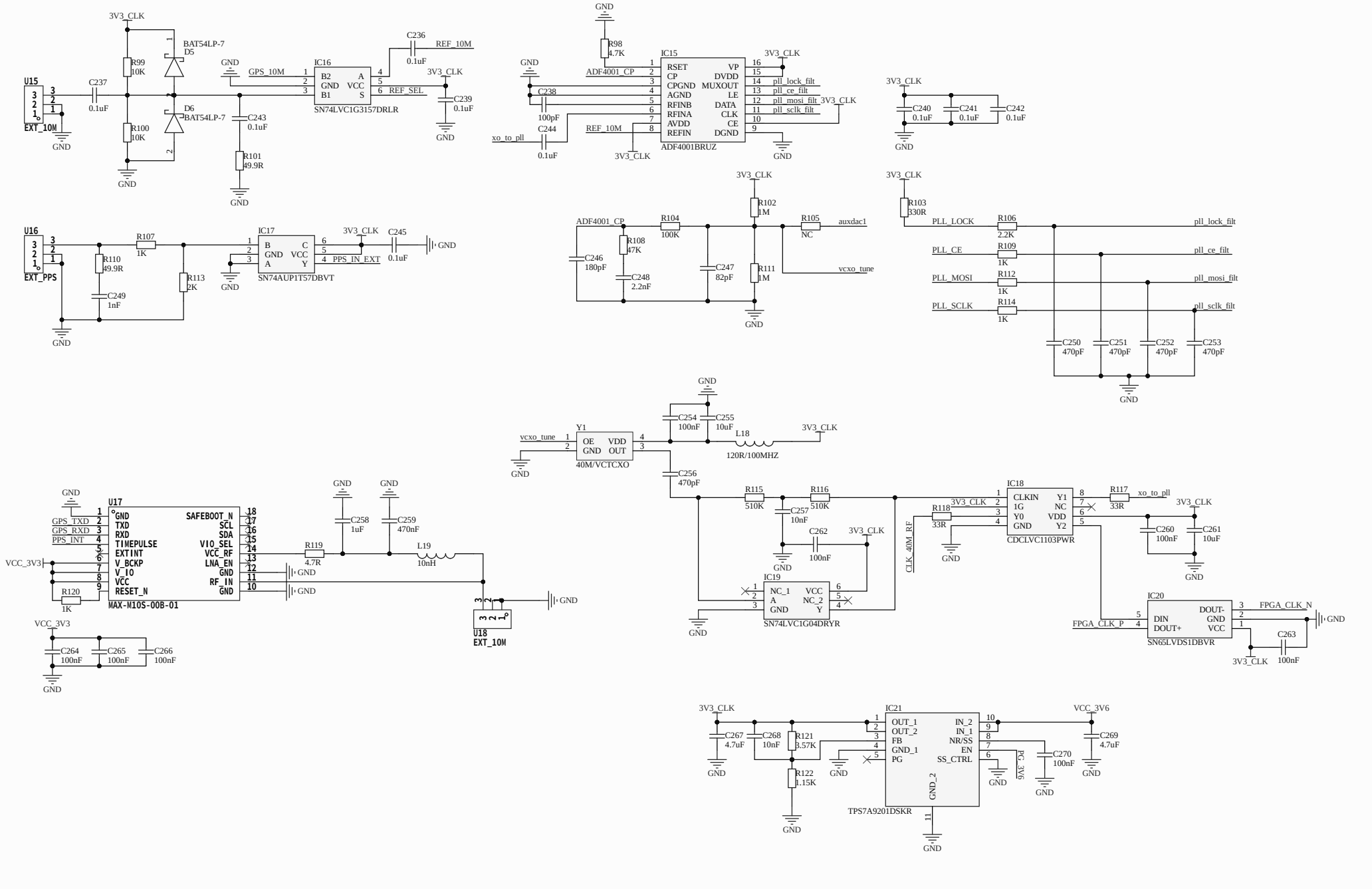

Title		
Size A3	Number	Revision
Date: 3/18/2026		Sheet of
File: F:\A_TEST\..\CLOCK.SchDoc		Drawn By: