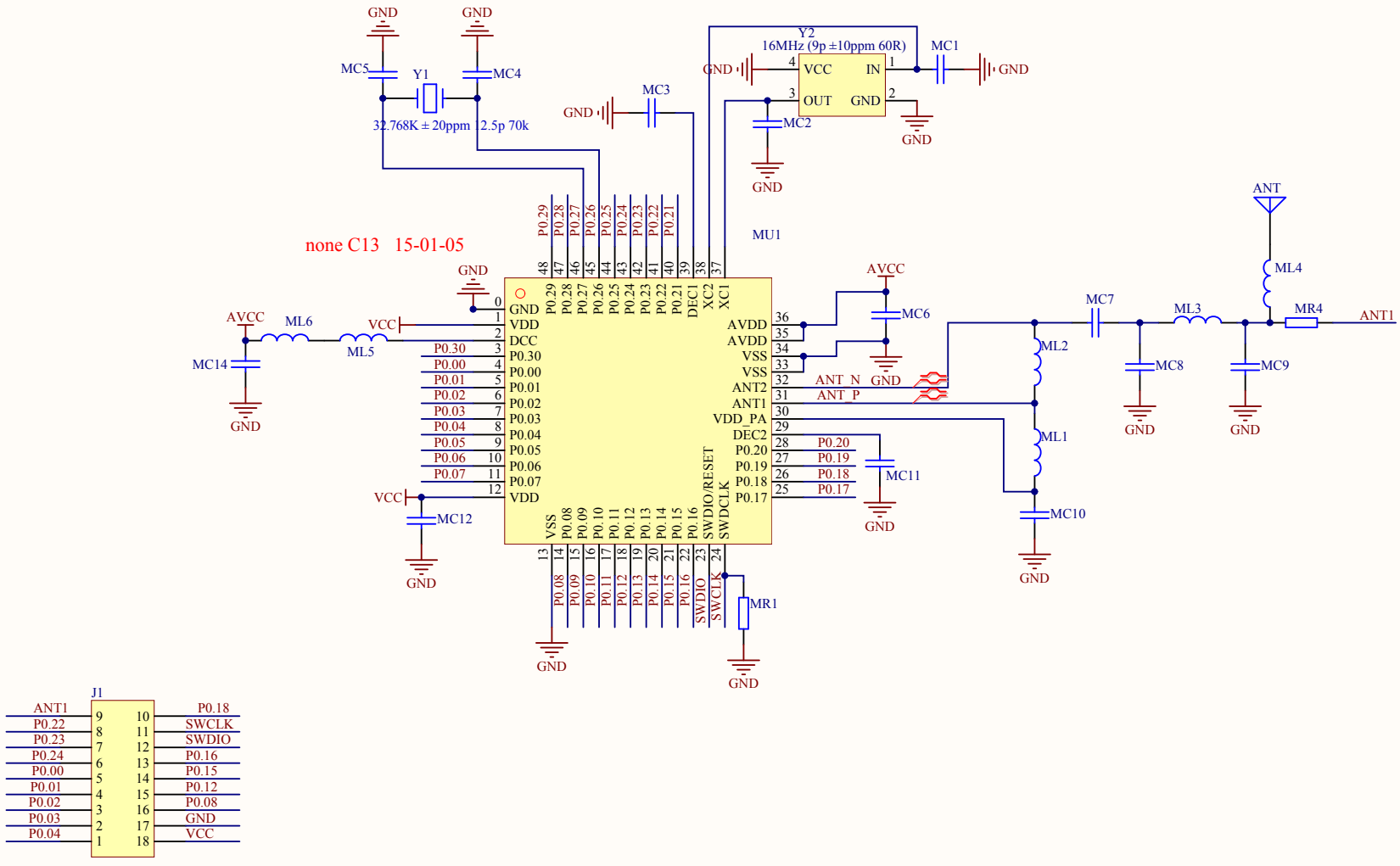

Title: MS49SF2			MINEW
Size: A4	Number: 1	Revision: V1.0	
Drawn By: Shain	Checked By: Shain	Sheet 1 of 1	
Date: 2015/1/9	File: F:\HardWare\MS49SFX\MS49SF2\MS49SF2_SCH_V10.SchDoc		