ALU Circuits

Kyle Pinto

ADDER

A = augend
B = addend
S = sum

C_i = carry in
C_o = carry out

$$\boxed{S = A + B}$$

A	B	C_i	C_o	S
0	0	0	0	0
0	0	1	0	1
0	1	0	0	1
0	1	1	1	0
1	0	0	0	1
1	0	1	1	0
1	1	0	1	0
1	1	1	1	1

$$\begin{aligned} S &= \bar{A}\bar{B}C_i + \bar{A}B\bar{C}_i + A\bar{B}\bar{C}_i + ABC_i \\ &= \bar{A}(\bar{B}C_i + B\bar{C}_i) + A(\bar{B}\bar{C}_i + BC_i) \\ &= \bar{A}(B \oplus C_i) + A(\overline{B \oplus C_i}) \\ &= A \oplus B \oplus C_i \end{aligned}$$

$$\begin{aligned} C_o &= \bar{A}BC_i + A\bar{B}C_i + AB\bar{C}_i + ABC_i \\ &= C_i(\bar{A}B + A\bar{B}) + AB(\bar{C}_i + C_i) \\ &= C_i(A \oplus B) + AB(1) \\ &= C_i(A \oplus B) + AB \end{aligned}$$

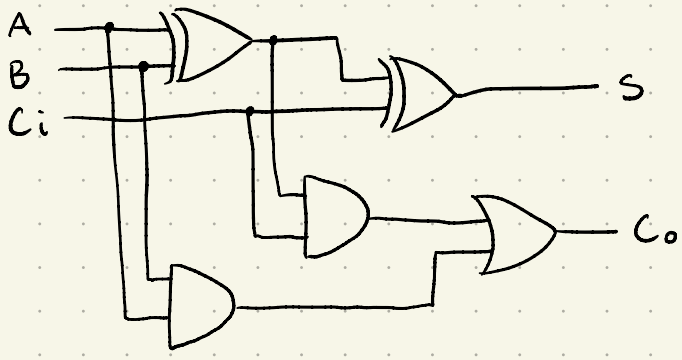

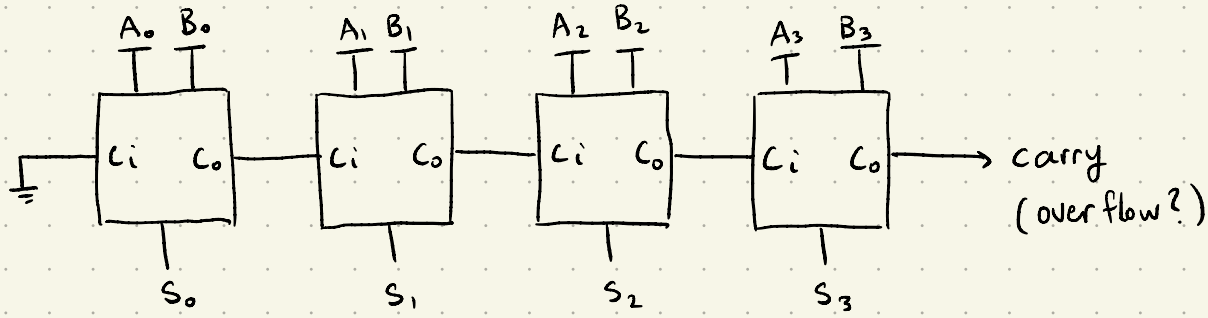

SUBTRACTOR

M = minuend
S = subtrahend
D = difference

B_i = borrow in
B_o = borrow out

$$\boxed{D = M - S}$$

M	S	B_i	B_o	D
0	0	0	0	0
0	0	1	1	1
0	1	0	1	1
0	1	1	1	0
1	0	0	0	1
1	0	1	0	0
1	1	0	0	0
1	1	1	1	1

$$\begin{aligned} D &= \bar{M}\bar{S}B_i + \bar{M}S\bar{B_i} + M\bar{S}\bar{B_i} + MSB_i \\ &= \bar{M}(\bar{S}B_i + S\bar{B_i}) + M(\bar{S}\bar{B_i} + SB_i) \\ &= \bar{M}(S \oplus B_i) + M(\overline{S \oplus B_i}) \\ &= M \oplus S \oplus B_i \end{aligned}$$

$$\begin{aligned} B_o &= \bar{M}\bar{S}B_i + \bar{M}S\bar{B_i} + \bar{M}SB_i + MSB_i \\ &= \bar{M}(\bar{S}B_i + S\bar{B_i}) + SB_i(\bar{M} + M) \\ &= \bar{M}(S \oplus B_i) + SB_i(1) \\ &= \bar{M}(S \oplus B_i) + SB_i \end{aligned}$$

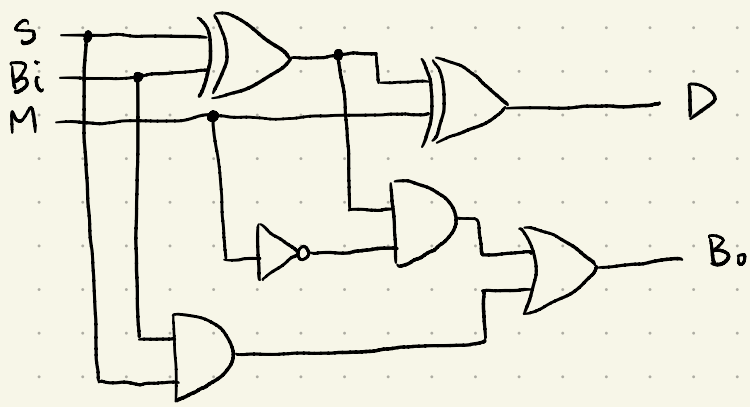

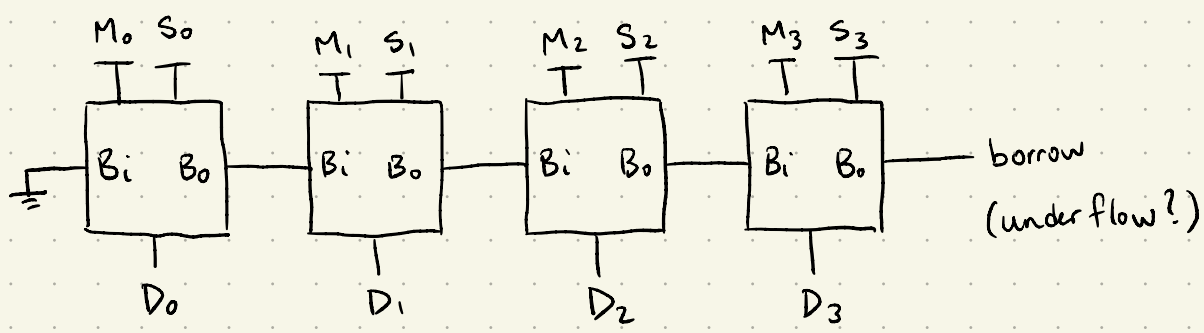

MULTIPLIER

A = multiplicand
B = multiplier
P = product

$$\boxed{P = A \times B}$$

Algorithm:

1. P = 0
2. C = B[0] & A
3. P = P + C
4. B >> 1
5. A << 1
6. repeat 2-5 for the number of bits in B

Example: A = 1011, B = 101

```
      1011
    x  101
    ------
      1011
+   00000
+  101100
  -------
  110111
```

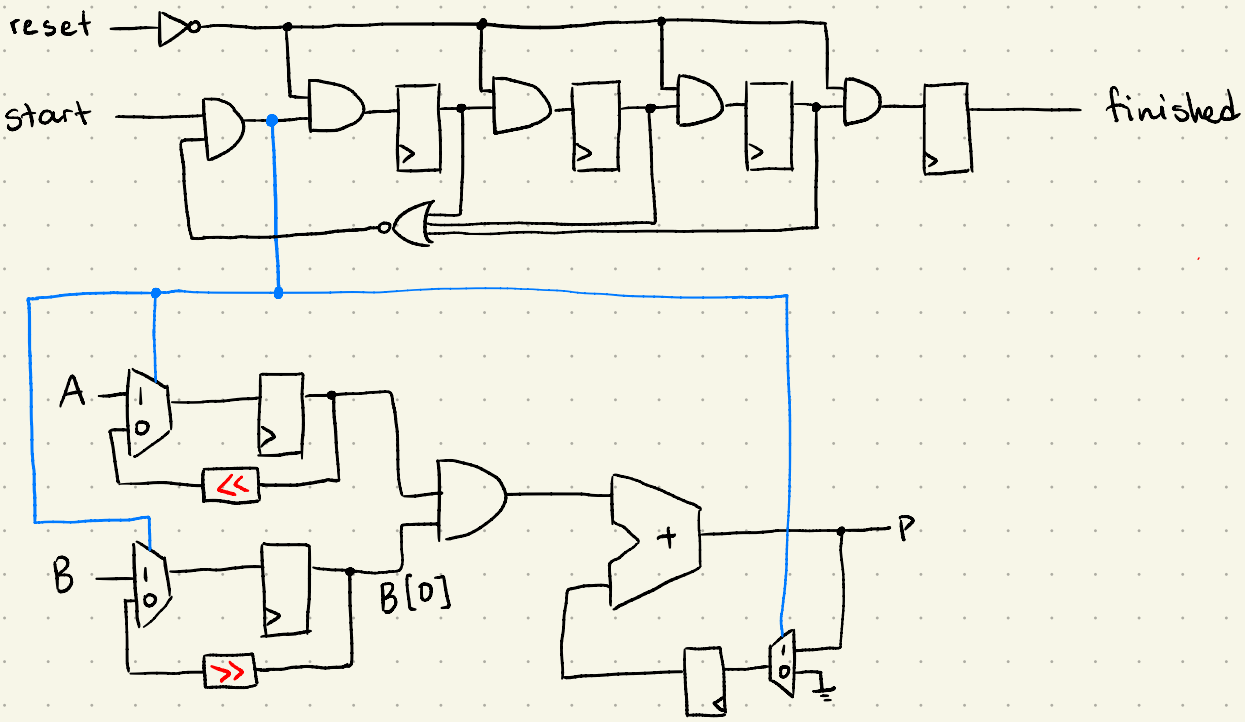

DIVIDER

N = dividend
D = divisor

Q = quotient
R = remainder

$\boxed{N \div D = Q, R}$

Algorithm:

1. X = 0
2. Q = 0
3. X = N << 1
4. Z = D - X
5. if B_0
   Q[0] AND B_0
   N = Z
6. Q << 1
7. repeat 3-6 for the number of bits in N
8. R = N

Example: N = 1011, D = 101

```
      0010
101 | 1011
    - 101
      0001
```

Q = 0010
R = 0001

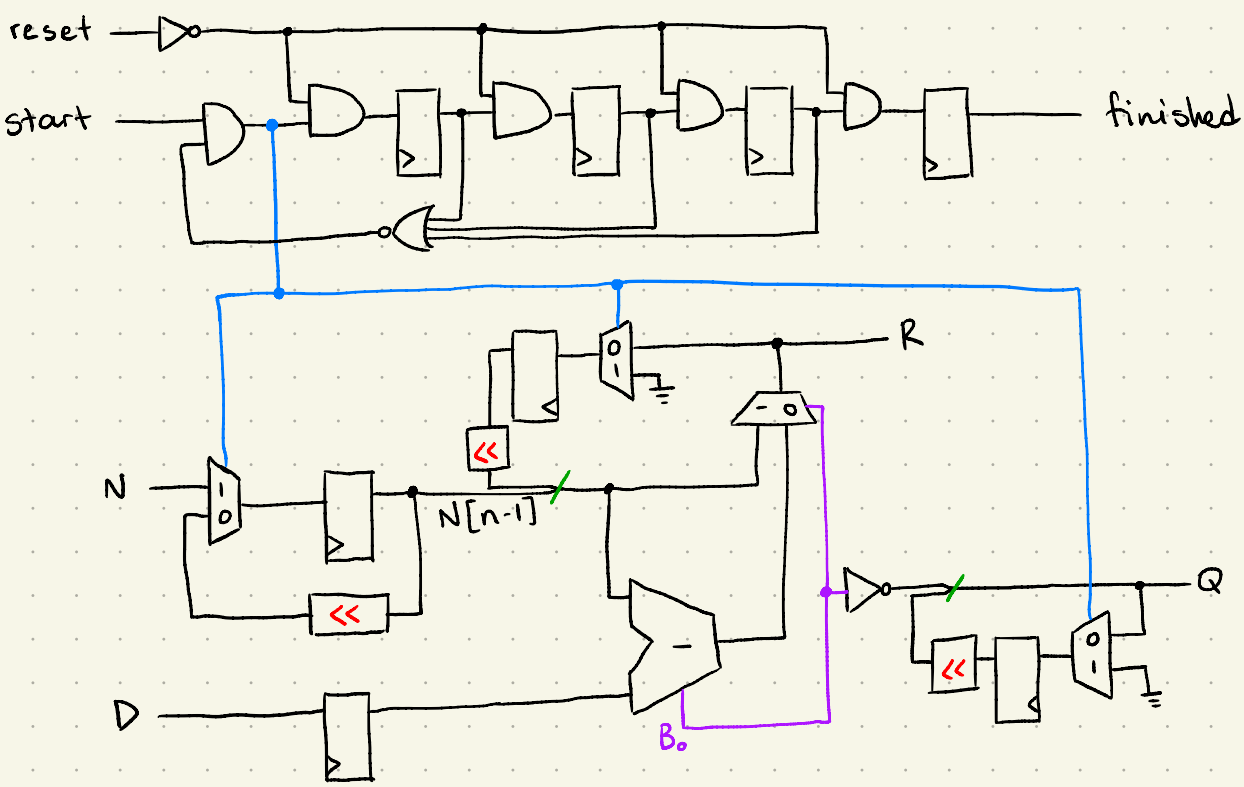

COMPARATOR

G = greater than
L = less than
E = equal to

A = left operand
B = right operand

G_E = greater than or equal to
L_E = less than or equal to

A	B	G
0	0	0
0	1	0
1	0	1
1	1	0

A	B	E
0	0	1
0	1	0
1	0	0
1	1	1

A	B	L
0	0	0
0	1	1
1	0	0
1	1	0

$G = A\bar{B}$ $\qquad$ $E = \overline{A \oplus B}$ $\qquad$ $L = \bar{A}B$

Compare bits from MSB to LSB.
For an n-bit number, the comparison of the ith bit is:

$$G_o = \underbrace{G_i}_{\text{previous bit greater than}} + \underbrace{E_{i-1}A\bar{B}}_{\text{previous bit equal and current bit greater than}}$$

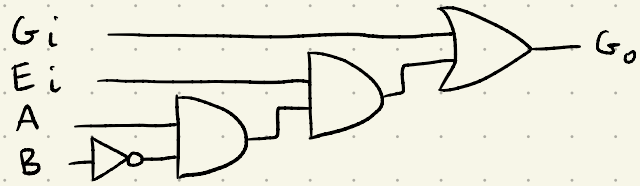

$$E_o = \underbrace{E_i}_{\text{previous bit equal}} \underbrace{(\overline{A \oplus B})}_{\text{current bit equal}}$$

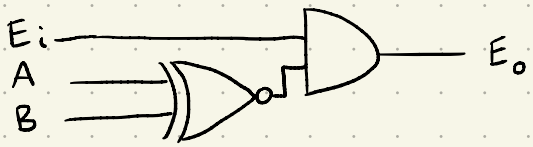

$$L_o = \underbrace{L_i}_{\text{previous bit less than}} + \underbrace{E_{i-1}\bar{A}B}_{\text{previous bit equal and current bit less than}}$$

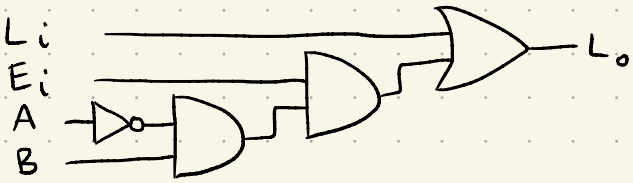

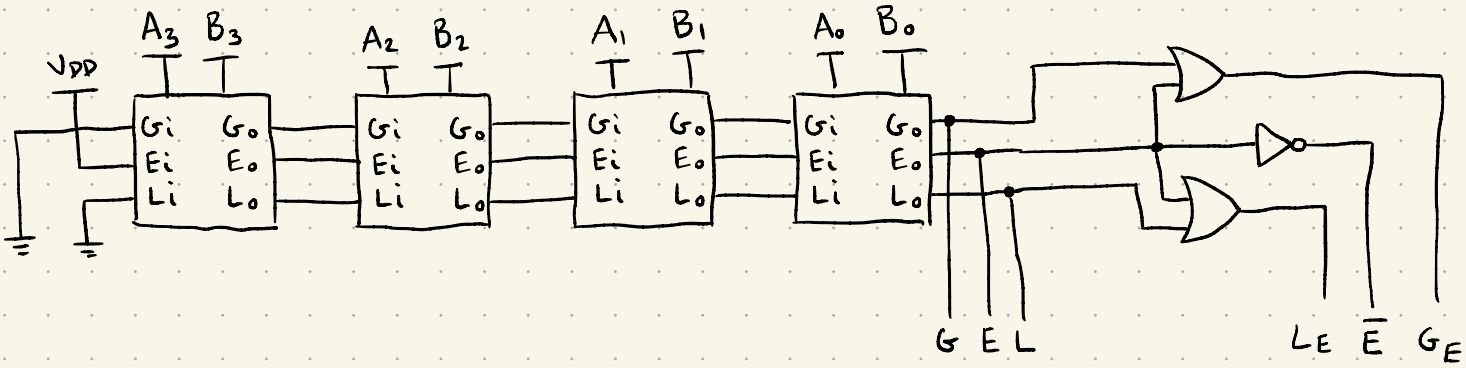

SHIFTER/ROTATOR

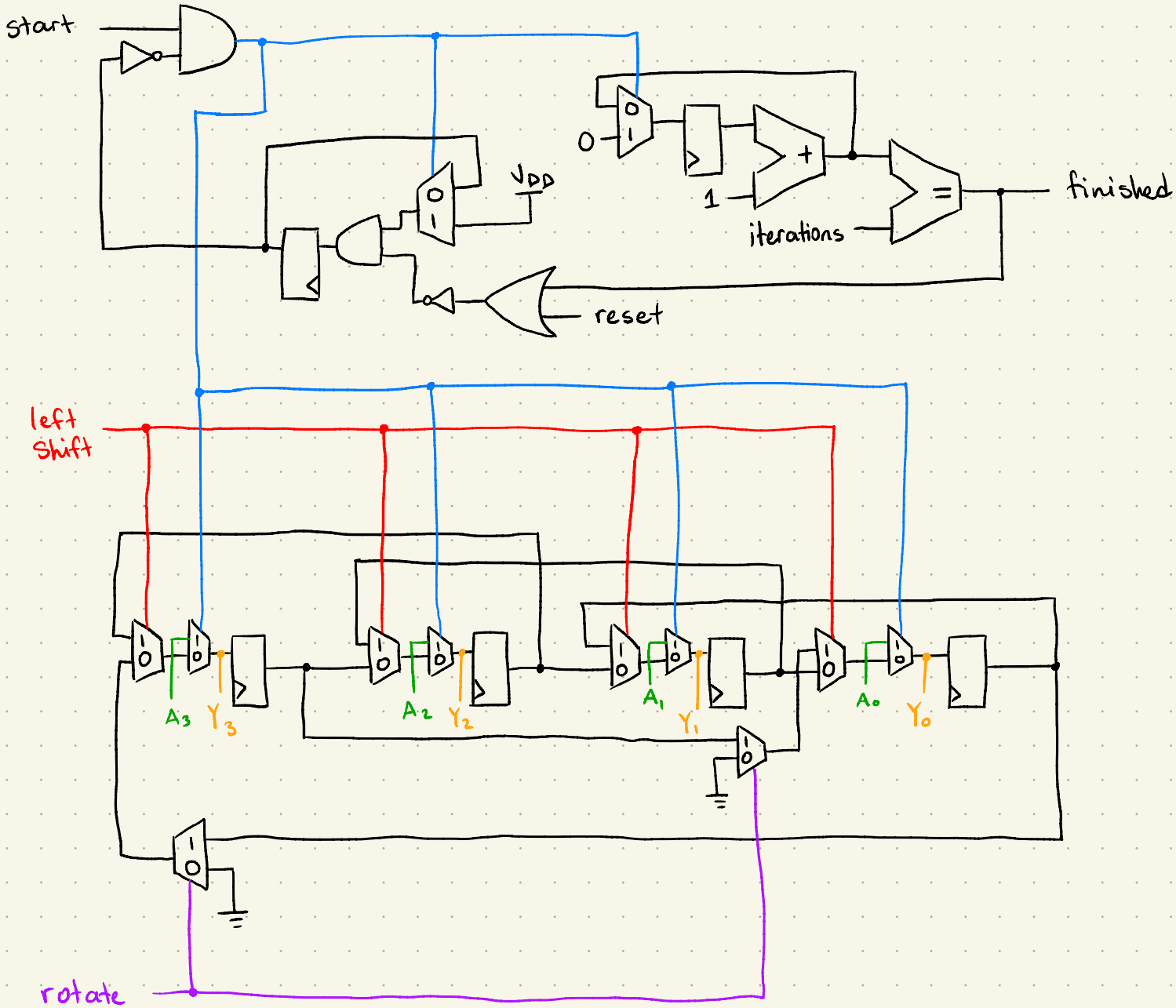
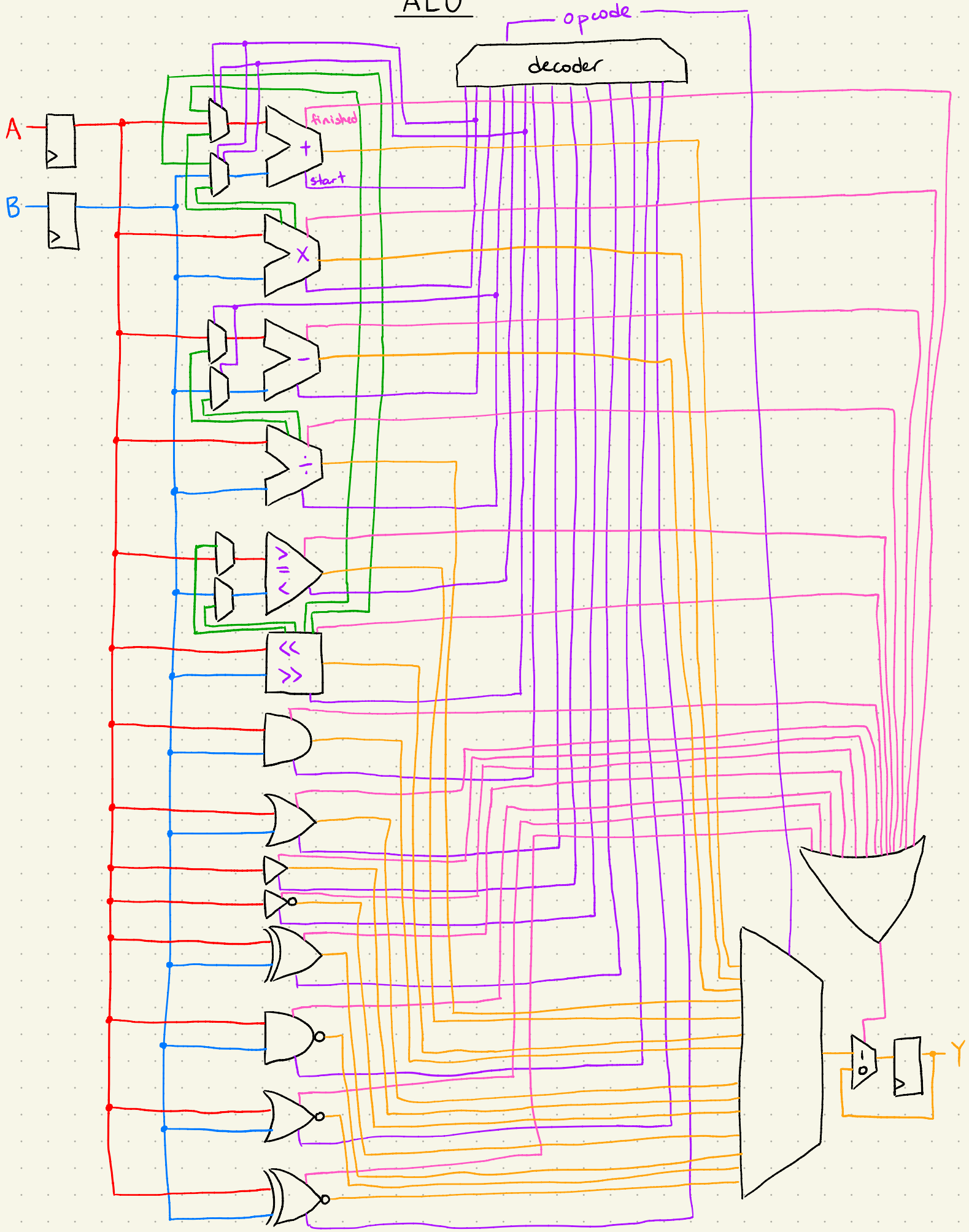
ALU