Altium_STM32_PCB_Design_Project

USB Connector and LDO Regulator (+5V to +3V3) Part:1

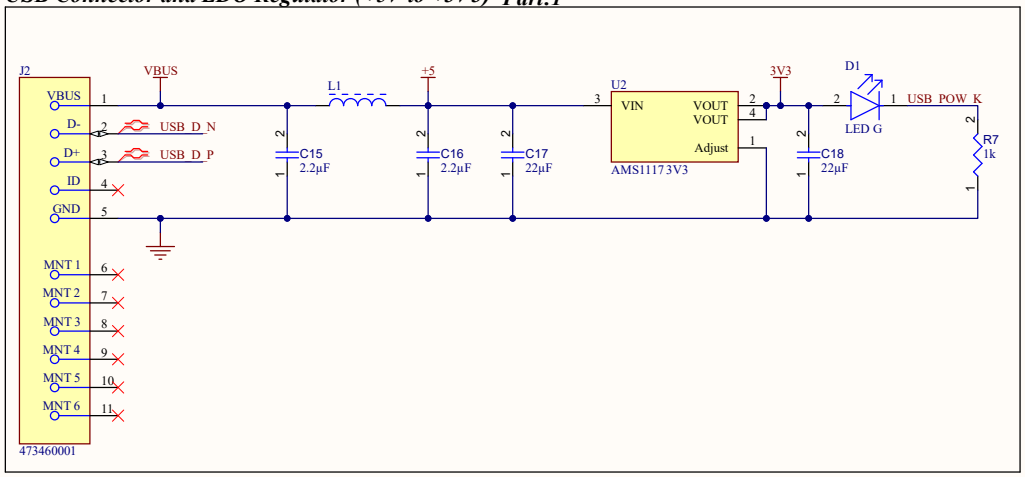

Inertial Measurement Unit (MPU6050) Part:2

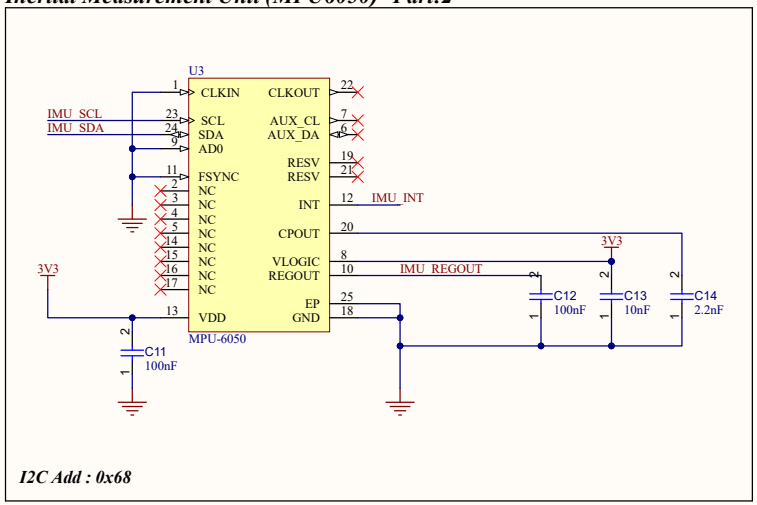

Microcontroller (STM32F4111) And Peripherals Part:3

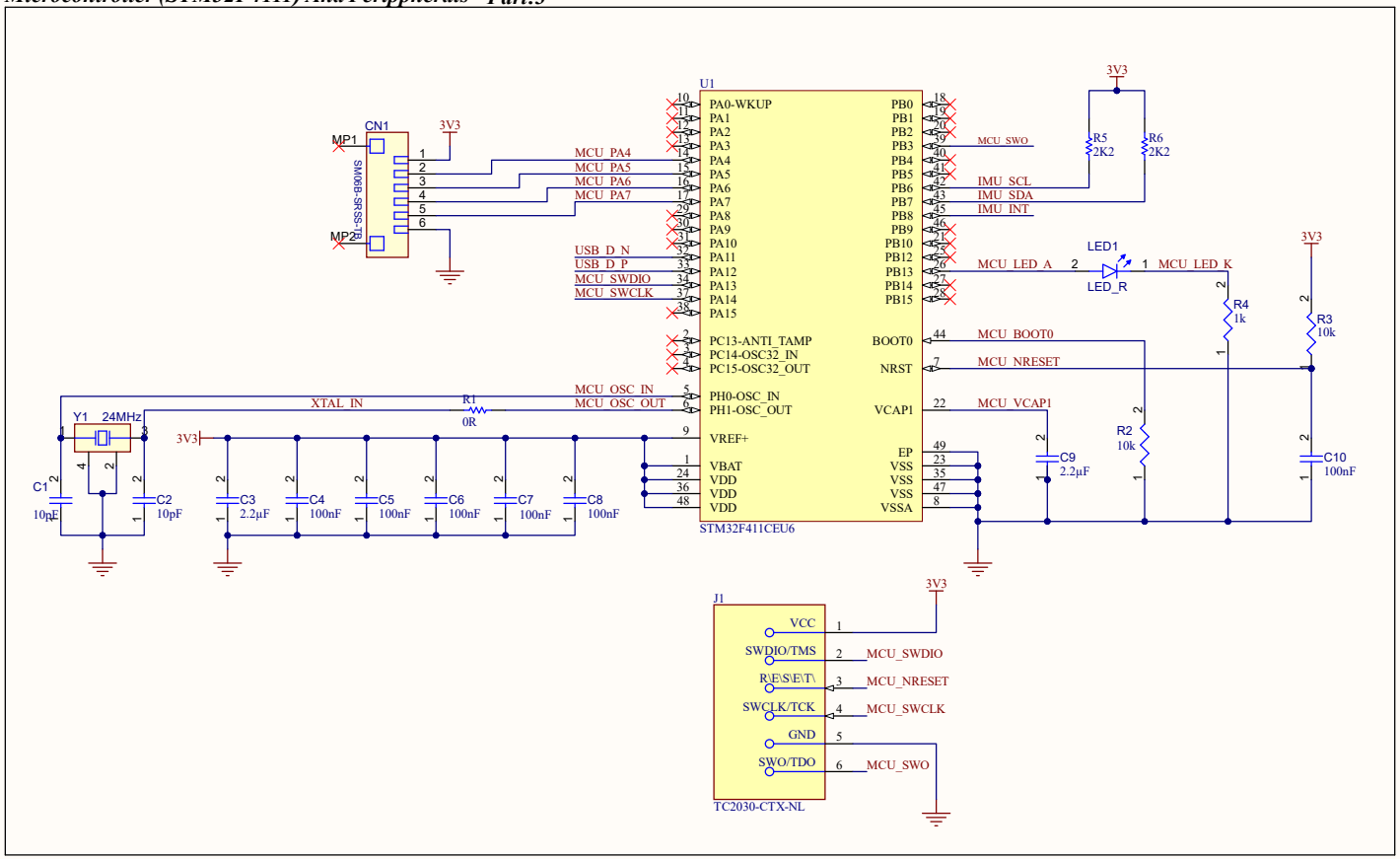

MADE_BY:

BRIJESH_AHIRWAR

Title		
Altium STM32 PCB Design Project		
Size A3	Number	Revision
Date: 4-03-2026	Sheet of	
File: C:\Altium_Projects\..\23095027_BRIJESH_AHIRWAR_EC373_LAB_SUB_3.SchDoc		