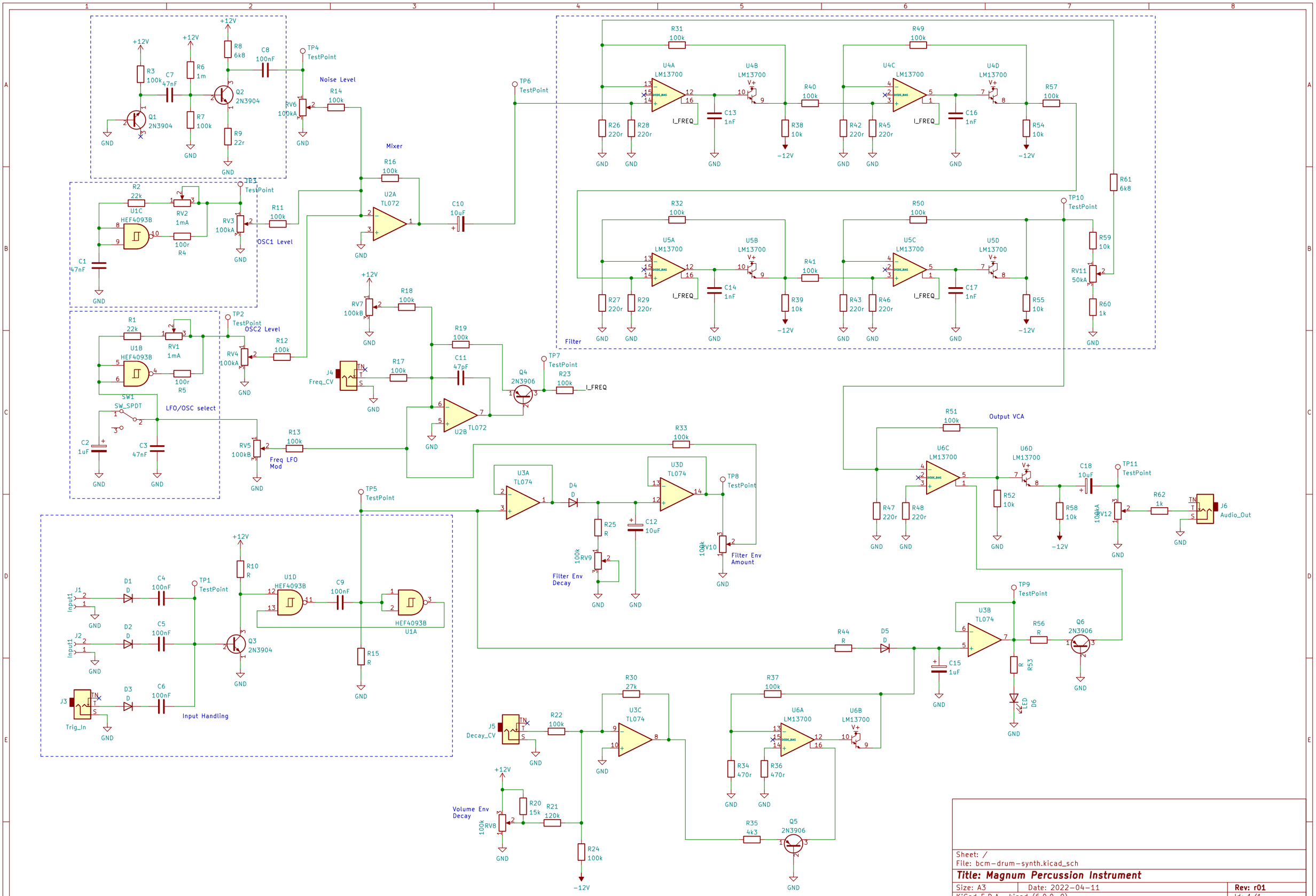
Noise Level
Mixer
OSC1 Level
OSC2 Level
LFO/OSC select
Freq LFO Mod
Filter
Filter Env Decay
Filter Env Amount
Output VCA
Input Handling
Volume Env Decay
Trig_In
Decay_CV
Freq_CV
Audio_Out
I_FREQ
Sheet: /
File: bcm-drum-synth.kicad_sch
Title: Magnum Percussion Instrument
Size: A3
Date: 2022-04-11
Rev: r01
KiCad E.D.A. kicad (6.0.0-0)
Id: 1/1