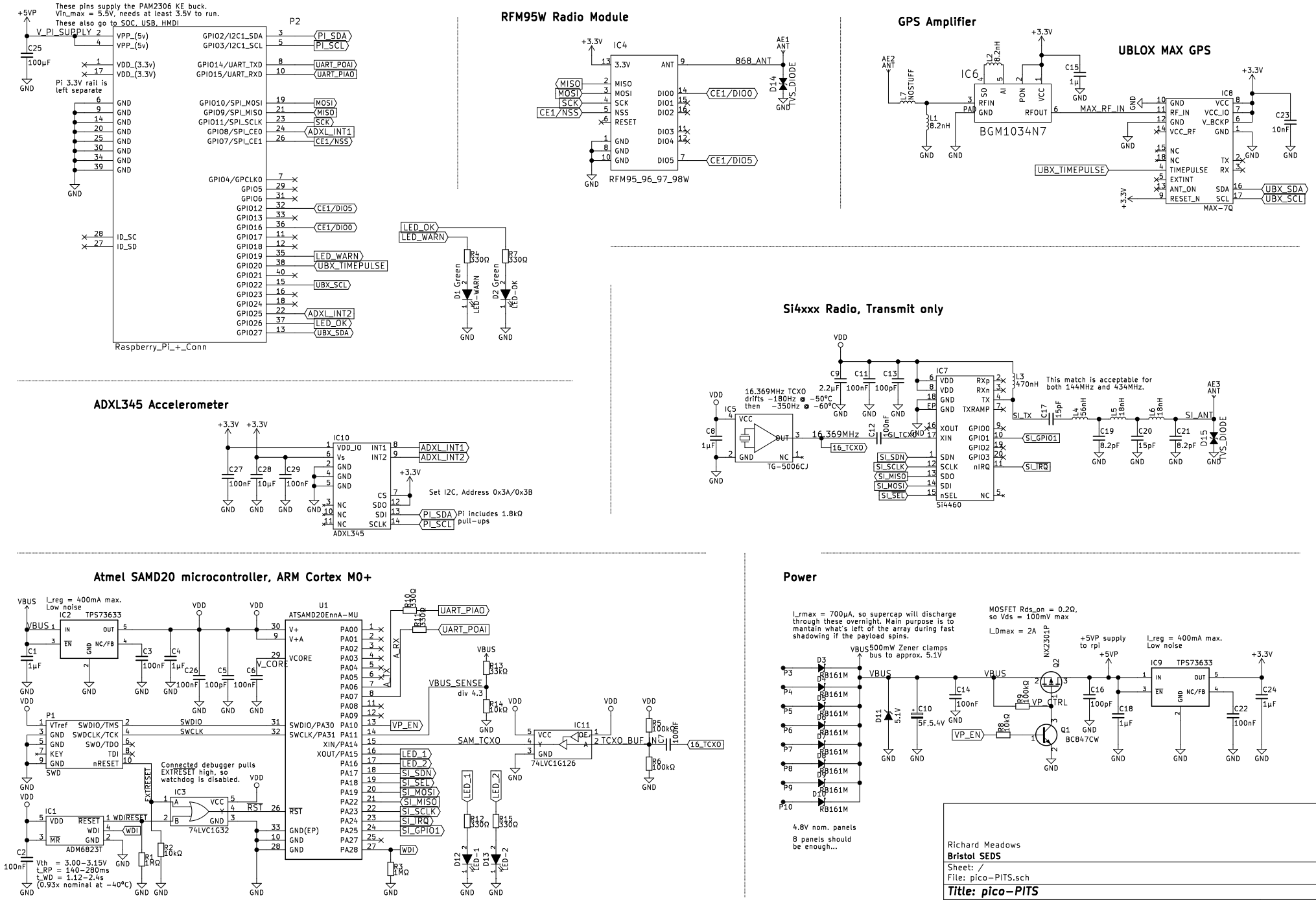
RFM95W Radio Module
GPS Amplifier
UBLOX MAX GPS
Si4xxx Radio, transmit only
ADXL345 Accelerometer
Atmel SAMD20 microcontroller, ARM Cortex M0+
Power
Raspberry_Pi_+_Conn
RFM95_96_97_98W
BGM1034N7
MAX-7Q
Si4460
TG-5006CJ
ADXL345
ATSAMD20EnnA-MU
ADM6823T
74LVC1G32
74LVC1G126
TPS73633
NX2301P
BC847CW
Richard Meadows
Bristol SEDS
Sheet: /
File: pico-PITS.sch
Title: pico-PITS
Size: User
Date: 2016-06-04
Rev: v0.2
KiCad E.D.A. kicad 4.0.2-stable
Id: 1/1