Nordic Semiconductor ASA

nRF52840 Bluetooth Low Energy/ANT/802.15.4/2.4GHz RF Development Board (PCA10056)

Sheet 1: Cover
Sheet 2: nRF52840 MCU
Sheet 3: Interface MCU
Sheet 4: Miscellaneous
Sheet 5: Connectors
Sheet 6: Power Supply

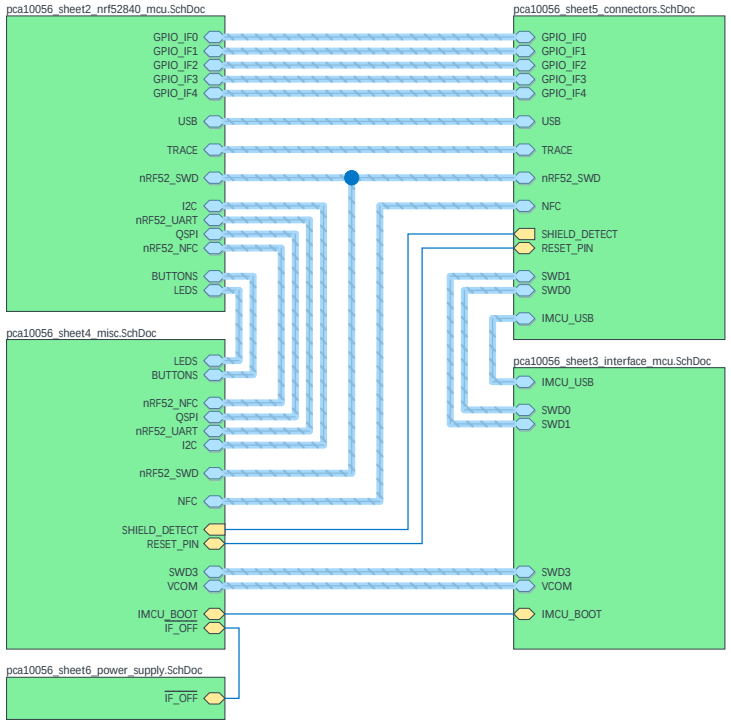

× The No ERC object is a design directive.
This directive is placed on a node in the circuit to suppress harmless warnings and/or erro r violation conditions that are detected when the schematic project is compiled.

Title: nRF52840 Development Board - Cover		
Size: A3	PCB Assembly Number: PCA10056	Revision: 3.0.3
Date: 2024.05.07		Sheet 1 of 6
File: pca10056_sheet1_cover.SchDoc		Drawn By: MASI/RUBR/STL1/RSK
Classification: Public		

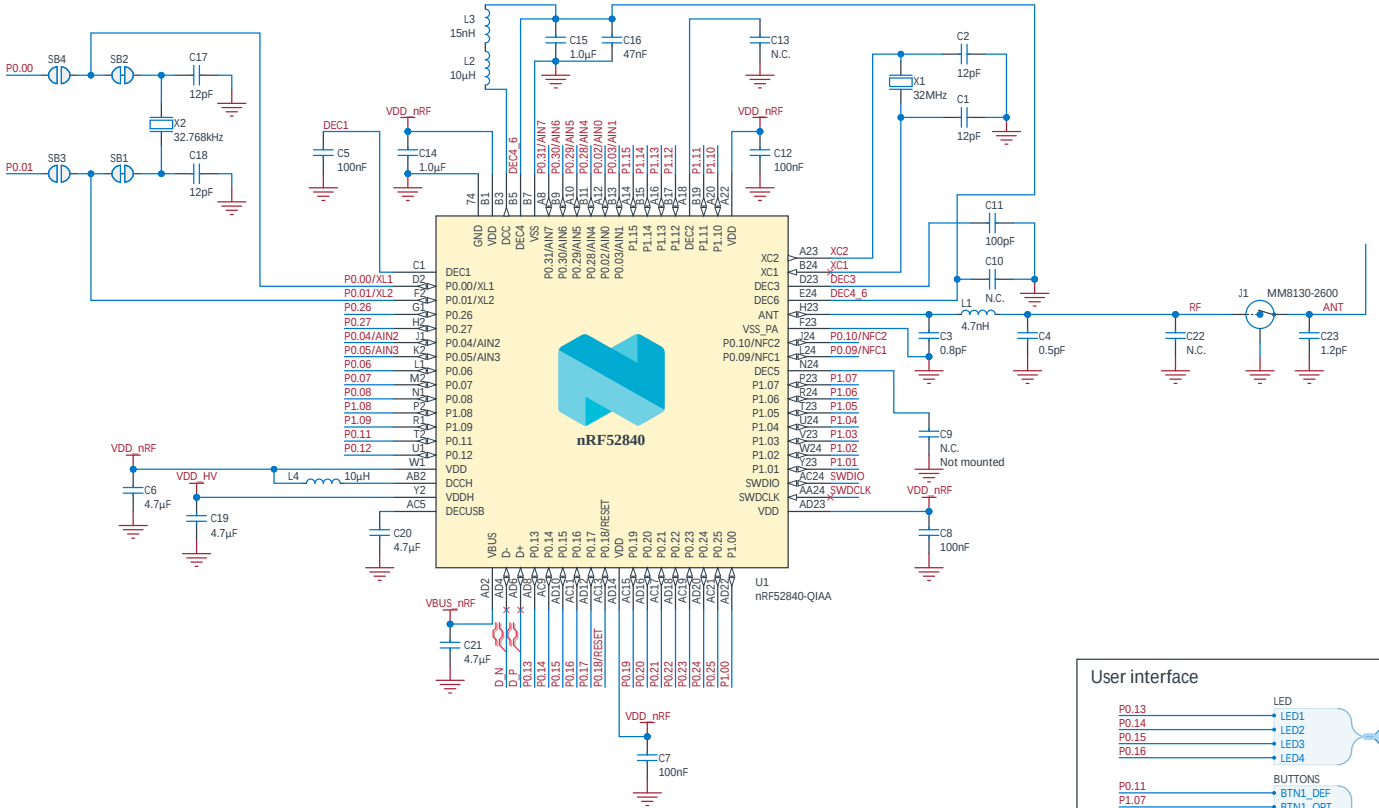

GPIO interface

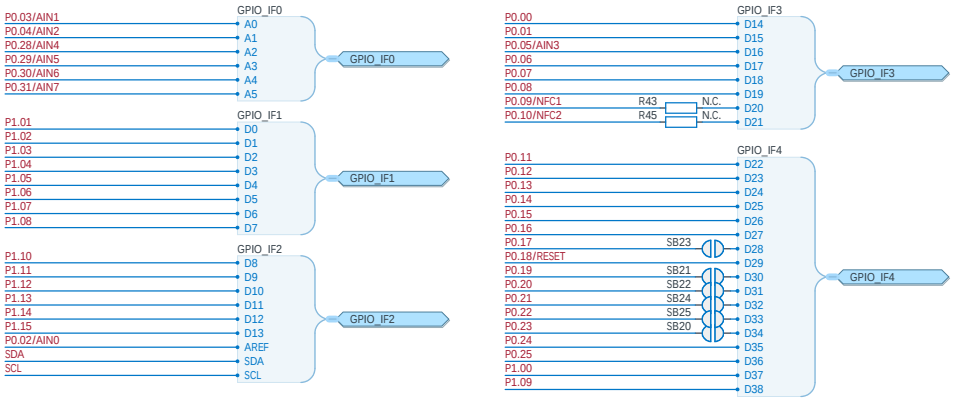

User interface

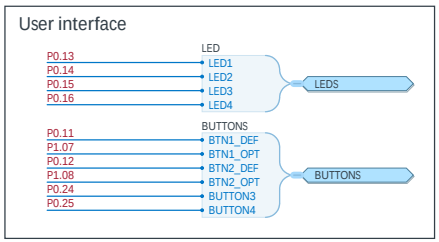

Debug interface

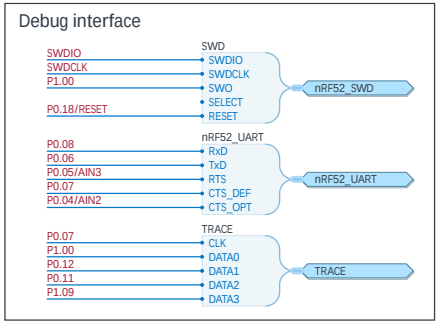

NFC

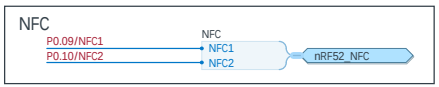

USB

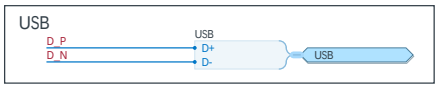

External memory

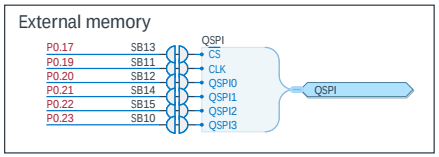

I2C

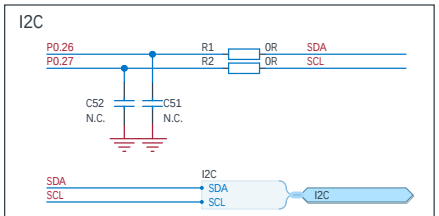

Title: nRF52840 Development Board - nRF52840 MCU		
Size: A3	PCB Assembly Number: PCA10056	Revision: 3.0.3
Date: 2024.05.24		Sheet 2 of 6
File: pca10056_sheet2_nrf52840_mcu.SchDoc		Drawn By: MASI/RUBR/STL1/RSK
Classification: Public		

Interface MCU

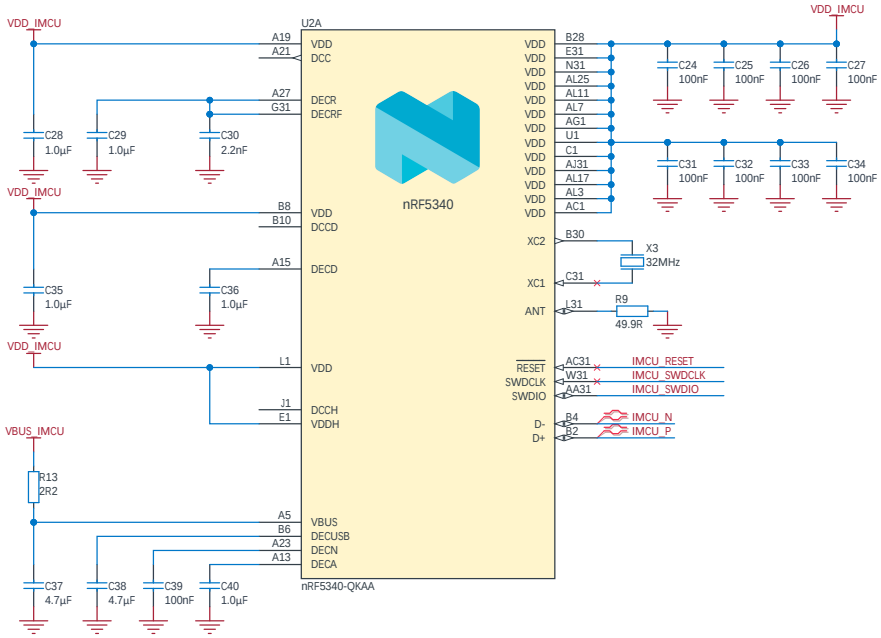

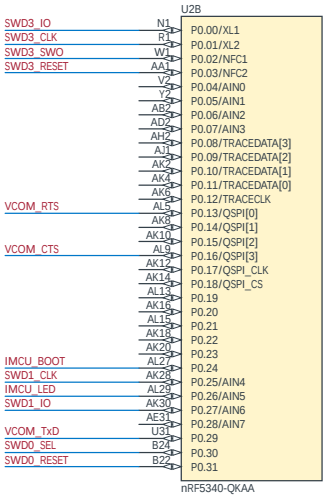

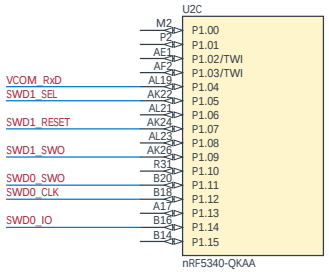

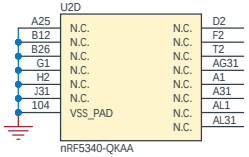

Interface MCU Programming Connector

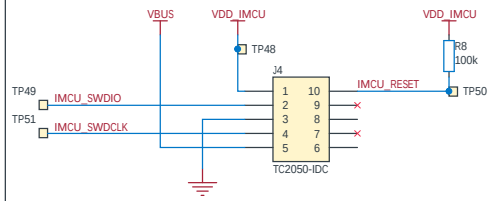

LED

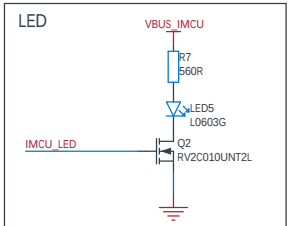

Ports

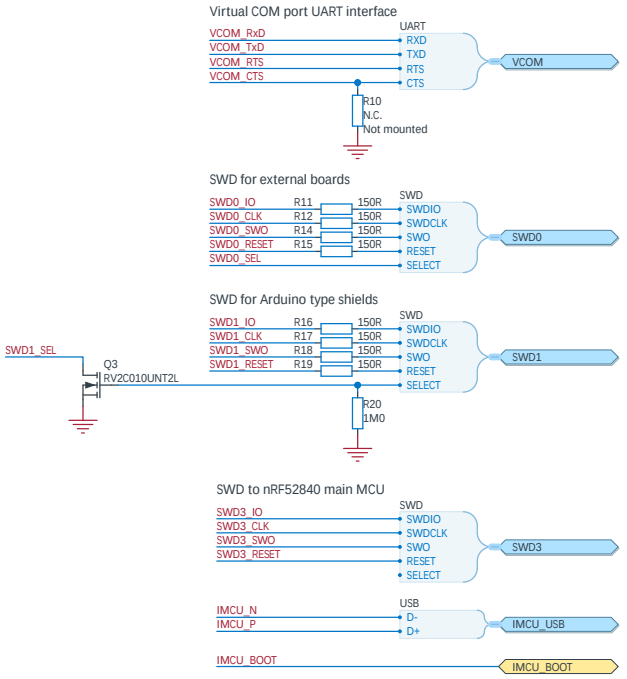

Title: nRF52840 Development Board - Interface MCU		
Size: A3	PCB Assembly Number: PCA10056	Revision: 3.0.3
Date: 2024.05.24		Sheet 3 of 6
File: pca10056_sheet3_interface_mcu.SchDoc		Drawn By: MASI/RUBR/STL1/RSK
Classification: Public		

Signal switches

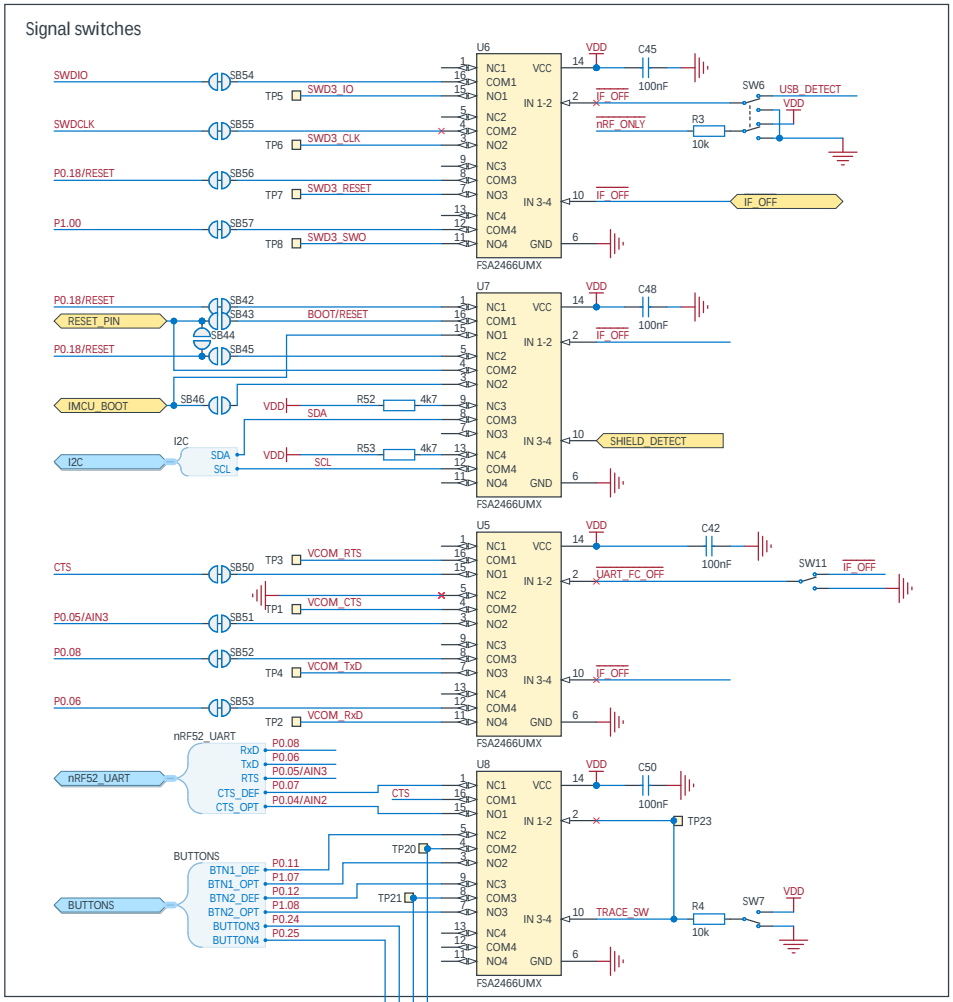

LEDs

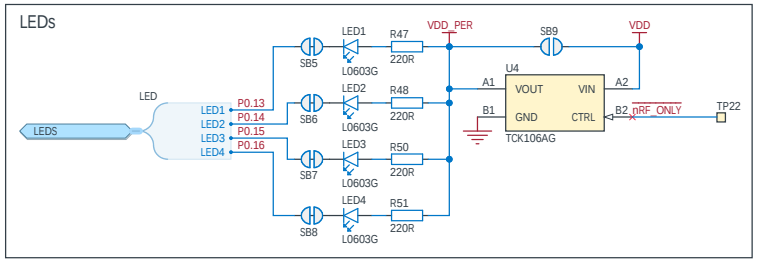

NFC pin configuration

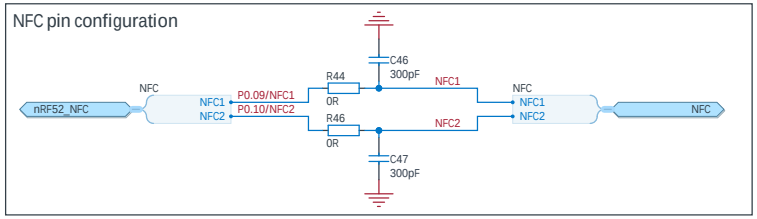

Flash memory

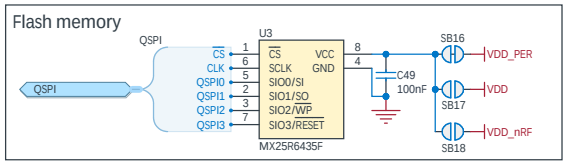

USB detect switch

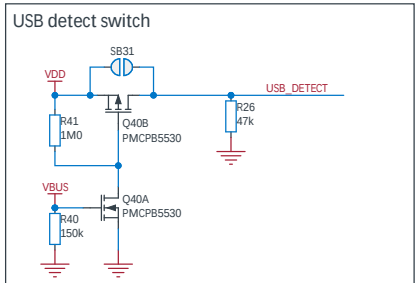

Boot/Reset button

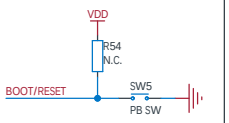

Buttons

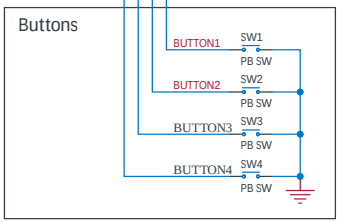

Extra Op-amp

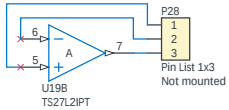

Debug interfaces

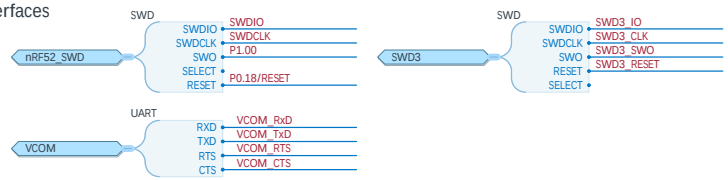

Title: nRF52840 Development Board - Miscellaneous		
Size: A3	PCB Assembly Number: PCA10056	Revision: 3.0.3
Date: 2024.05.07		Sheet 4 of 6
File: pca10056_sheet4_misc.SchDoc		Drawn By: MASI/RUBR/STL1/RSK
Classification: Public		

NORDIC SEMICONDUCTOR

Arduino Interface Connectors

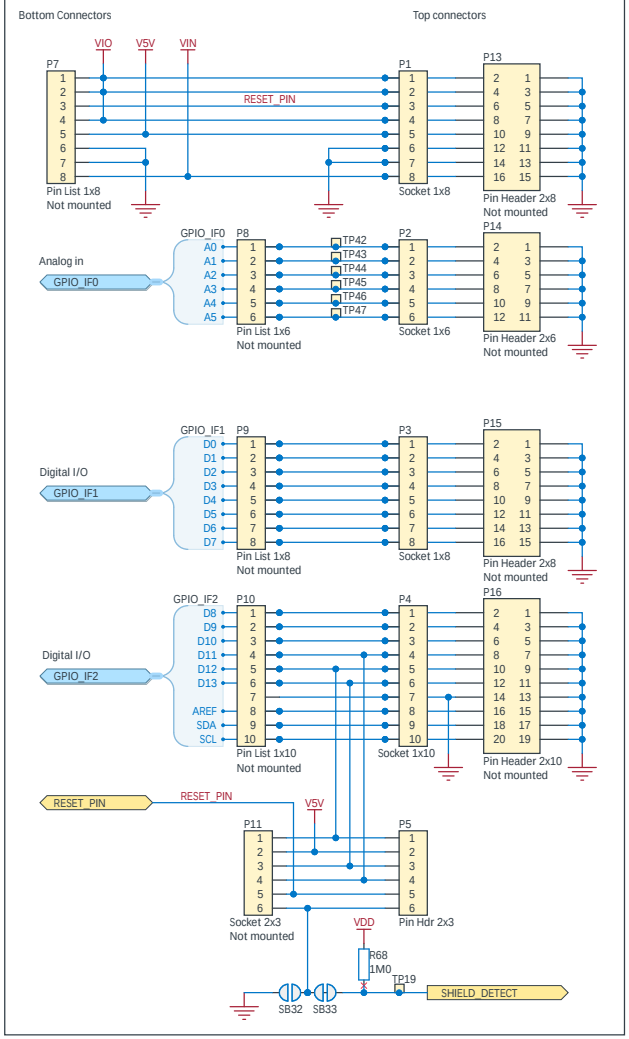

nRF USB Connector

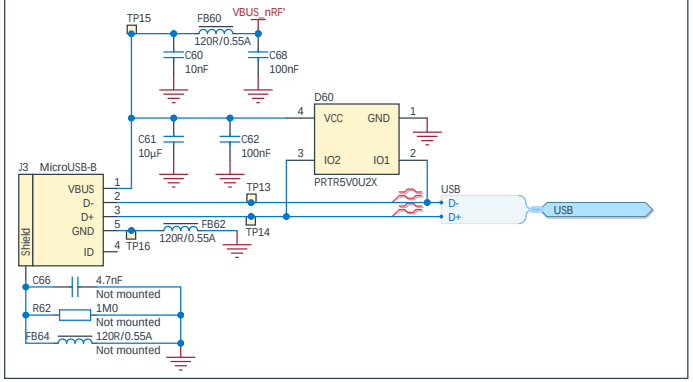

Interface MCU USB Connector

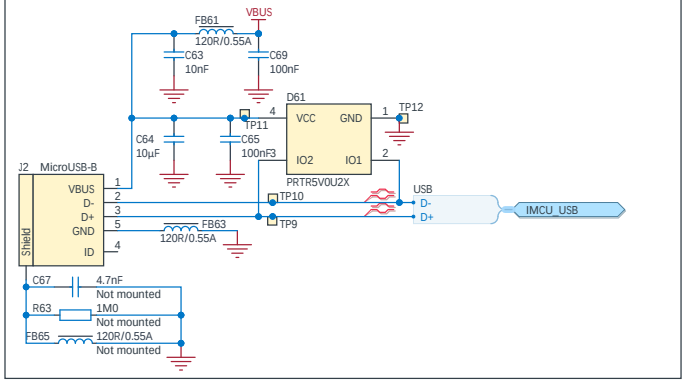

Debug IN Connector

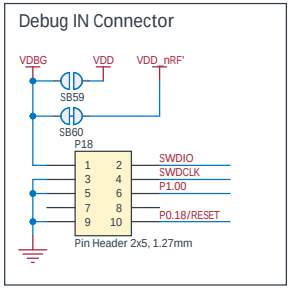

Trace connector

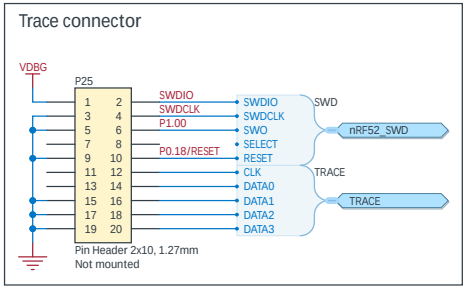

Debug OUT Connector

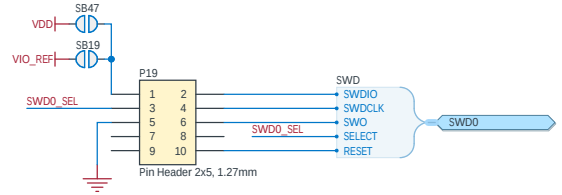

Li-ion connector

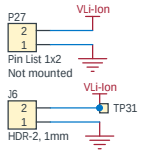

NFCT Antenna Connector

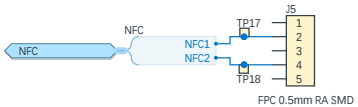

Shield Debug and Current measurement Connector

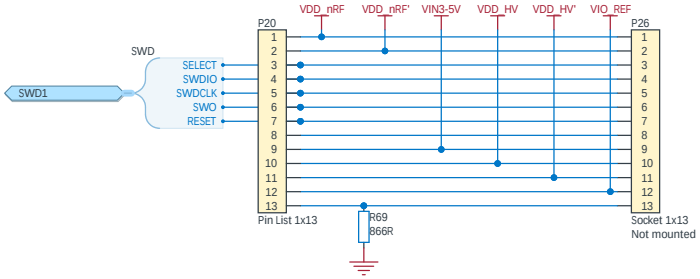

Auxiliary Connectors

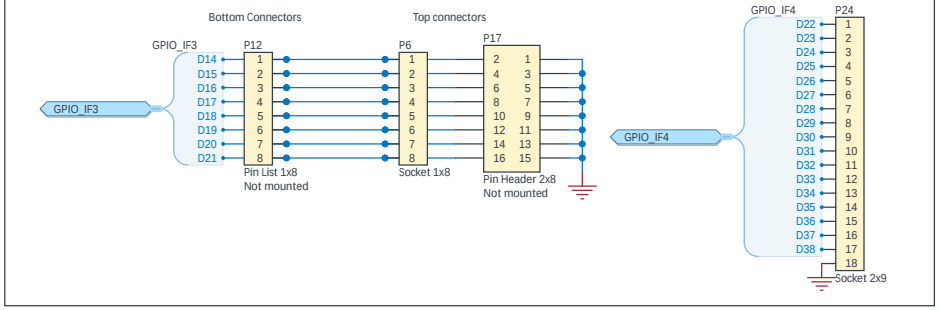

Title: nRF52840 Development Board - Connectors		
Size: A3	PCB Assembly Number: PCA10056	Revision: 3.0.3
Date: 2024.05.16		Sheet 5 of 6
File: pca10056_sheet5_connectors.SchDoc		Drawn By: MASI/RUBR/STL1/RSK
Classification: Public		

Power input, reverse protection

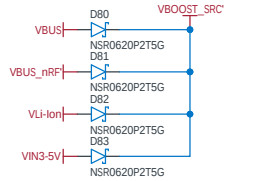

Power switch

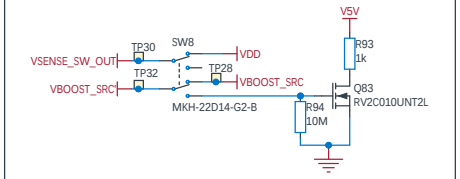

5V Boost regulator

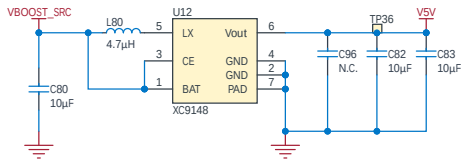

Buck regulator for VDD

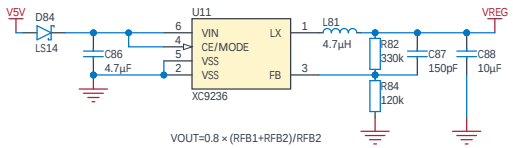

Power sources and switches

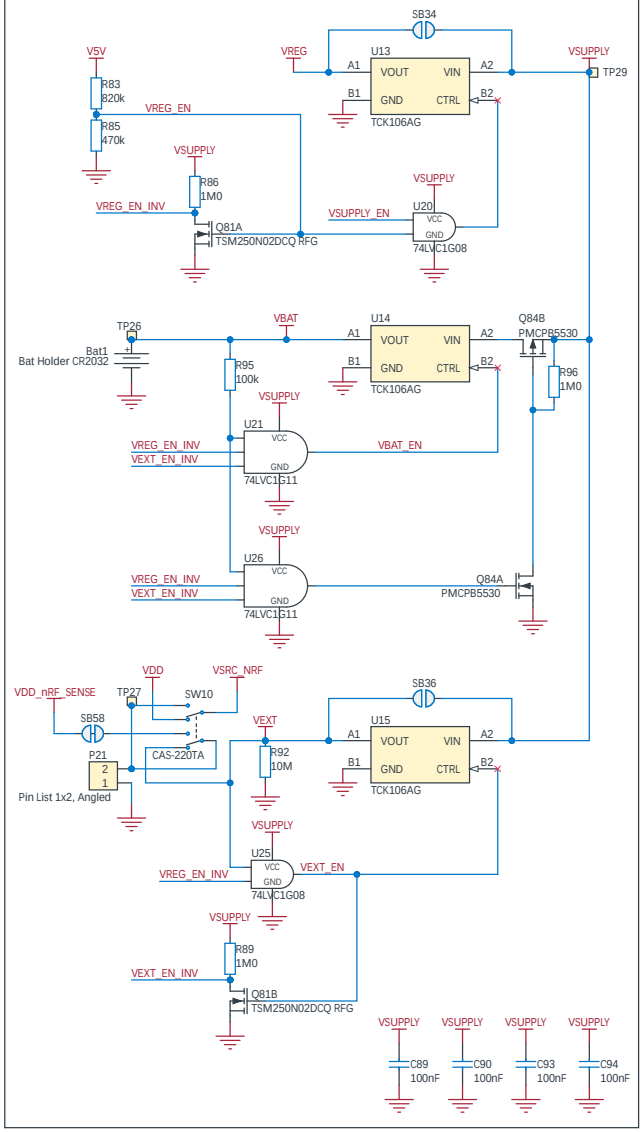

VDD_nRF sense buffer and switch

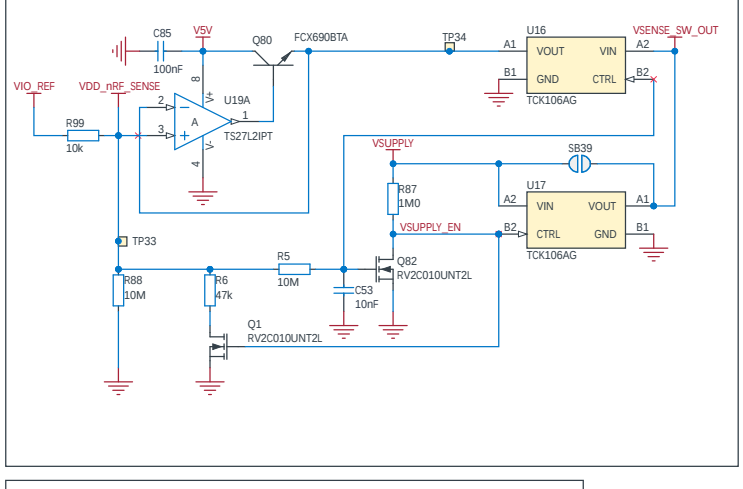

nRF power source select and current measurement

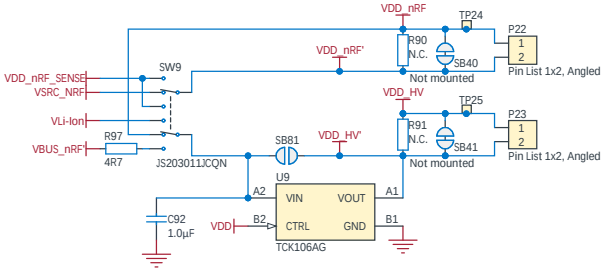

VBUS_nRF switch

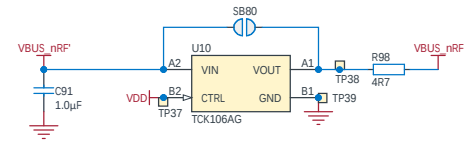

Interface MCU power switch

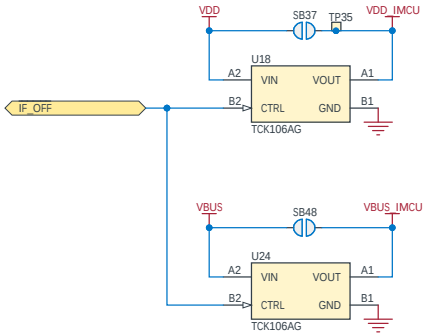

Instrument ground

Title: nRF52840 Development Board - Power Supply		
Size: A3	PCB Assembly Number: PCA10056	Revision: 3.0.3
Date: 2024.05.07		Sheet 6 of 6
File: pca10056_sheet6_power_supply.SchDoc		Drawn By: MASI/RUBR/STL1/RSK
Classification: Public		

NORDIC SEMICONDUCTOR

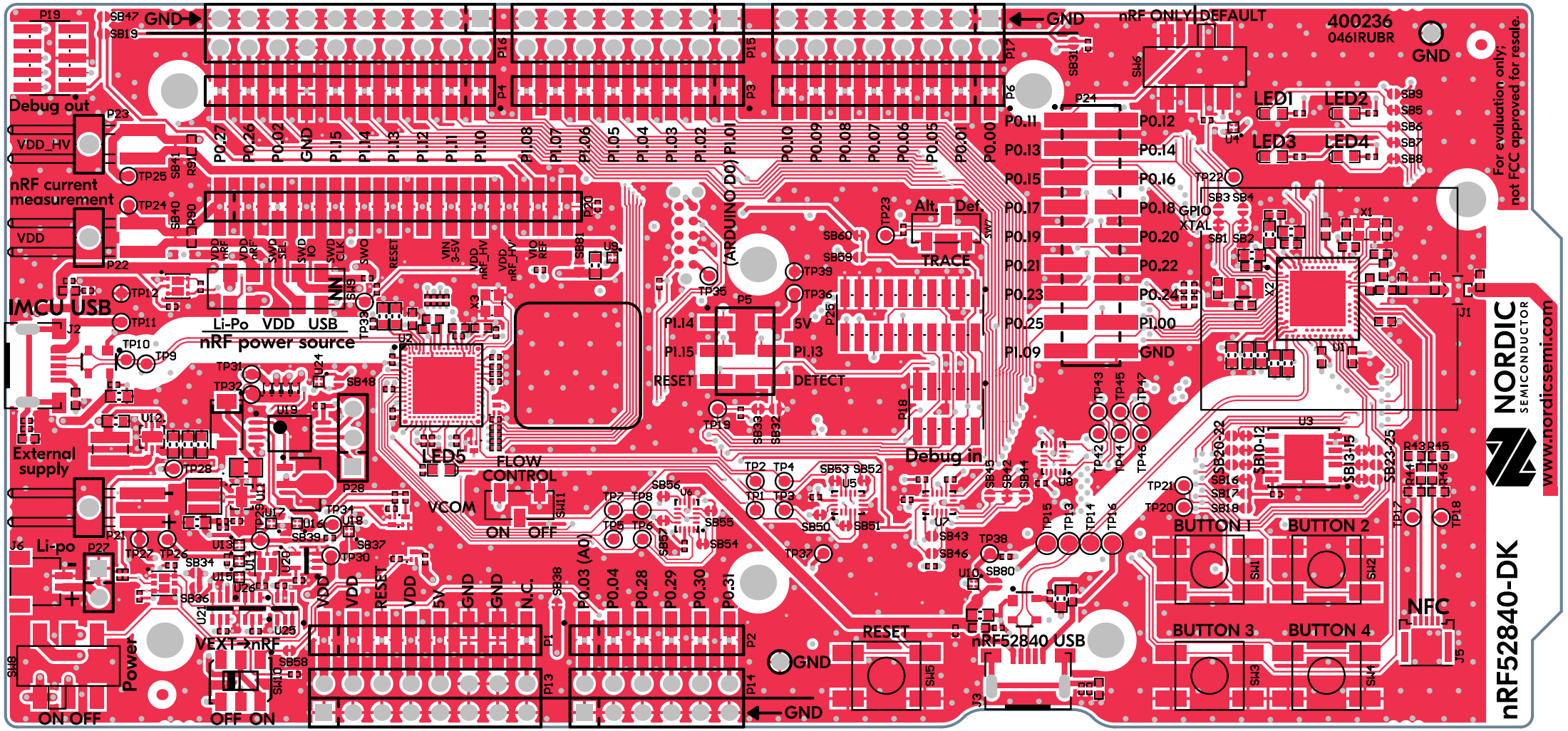
nRF52840-DK
NORDIC SEMICONDUCTOR
www.nordicsemi.com
For evaluation only; not FCC approved for resale.
400236
046IRUBR
nRF ONLY DEFAULT
Debug out
VDD_HV
nRF current measurement
VDD
P22
IMCU USB
J2
Li-Po VDD USB
nRF power source
External supply
Li-po
J6
P27
P21
Power
ON OFF
OFF ON
VEXT->nRF
SW8
SW10
SB58
U25
U26
SB36
U21
SB34
TP26
TP27
U13
U14
U15
U16
U17
U18
U19
U20
SB39
SB37
TP30
TP34
TP28
P28
U12
TP31
TP32
U24
SB48
U9
TP33
U2
X3
LED5
FLOW CONTROL
VCOM
ON OFF
SW11
SB56
SB55
SB54
SB57
U6
TP7
TP8
TP5
TP6
SB38
P0.03 (A0)
P0.04
P0.28
P0.29
P0.30
P0.31
P1
P2
P13
P14
GND
RESET
VDD
5V
N.C.
P5
P1.14
P1.15
RESET
TP35
TP19
SB33
SB32
(ARDUINO D0) P1.01
TP23
Alt.
Def.
SW7
TRACE
SB60
SB59
TP39
TP36
5V
P1.13
DETECT
P25
R18
Debug in
TP2
TP4
TP1
TP3
SB53
SB52
U5
SB50
SB51
SB45
SB42
SB44
U8
U7
SB43
SB46
TP38
TP37
U10
SB80
TP15
TP13
TP14
TP16
TP43
TP45
TP47
TP42
TP44
TP46
nRF52840 USB
RESET
SW5
J3
P0.11
P0.13
P0.15
P0.17
P0.19
P0.21
P0.23
P0.25
P1.09
P0.12
P0.14
P0.16
P0.18 GPIO
P0.20 XTAL
P0.22
P0.24
P1.00
GND
P24
SW6
SB31
LED1
LED2
LED3
LED4
SB9
SB5
SB6
SB7
SB8
U4
TP22
SB3
SB4
SB1
SB2
X1
X2
U1
J1
U3
SB20-22
SB10-12
SB13-15
SB23-25
R43
R45
R44
R46
TP21
TP20
TP17
TP18
BUTTON 1
BUTTON 2
BUTTON 3
BUTTON 4
SW1
SW2
SW3
SW4
NFC
J5

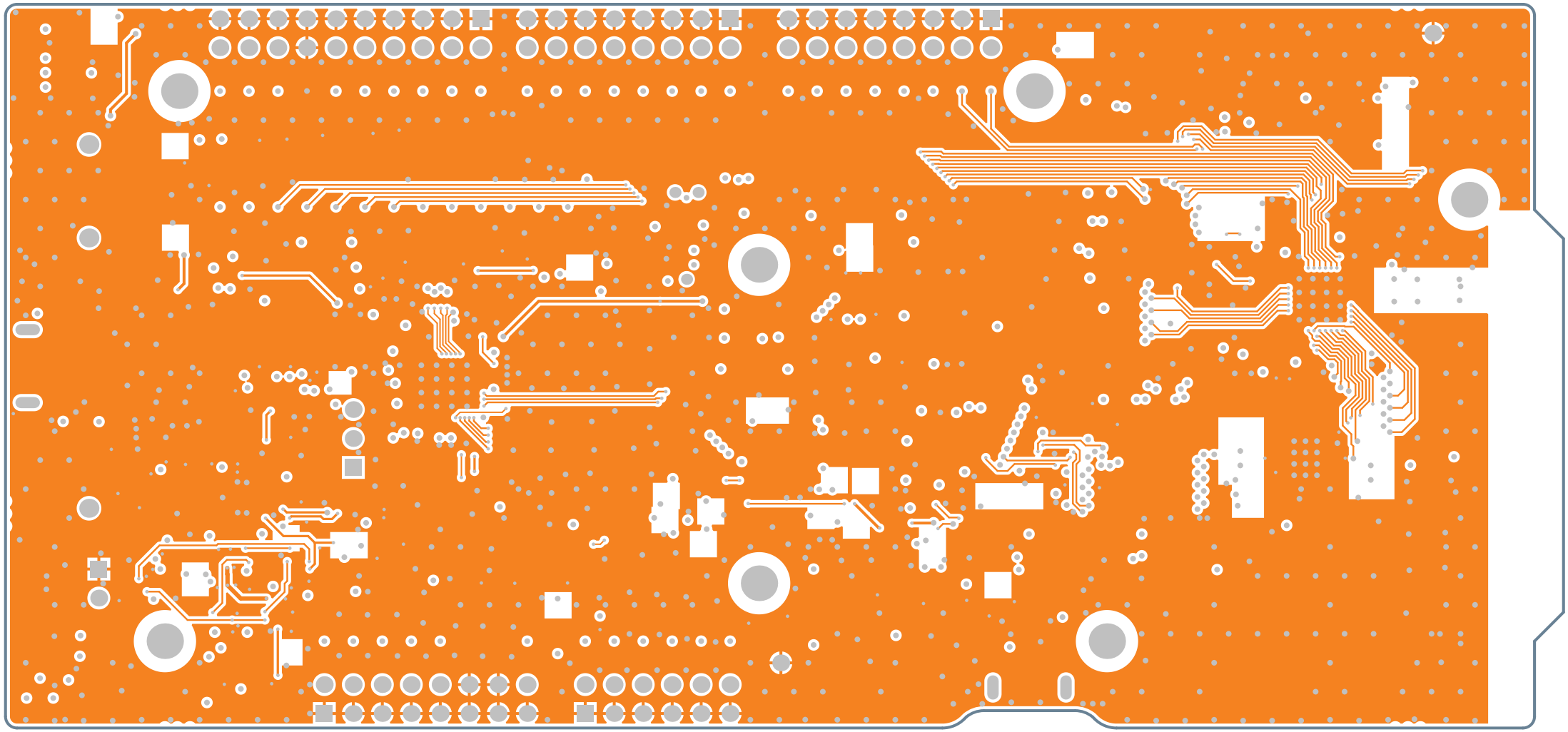

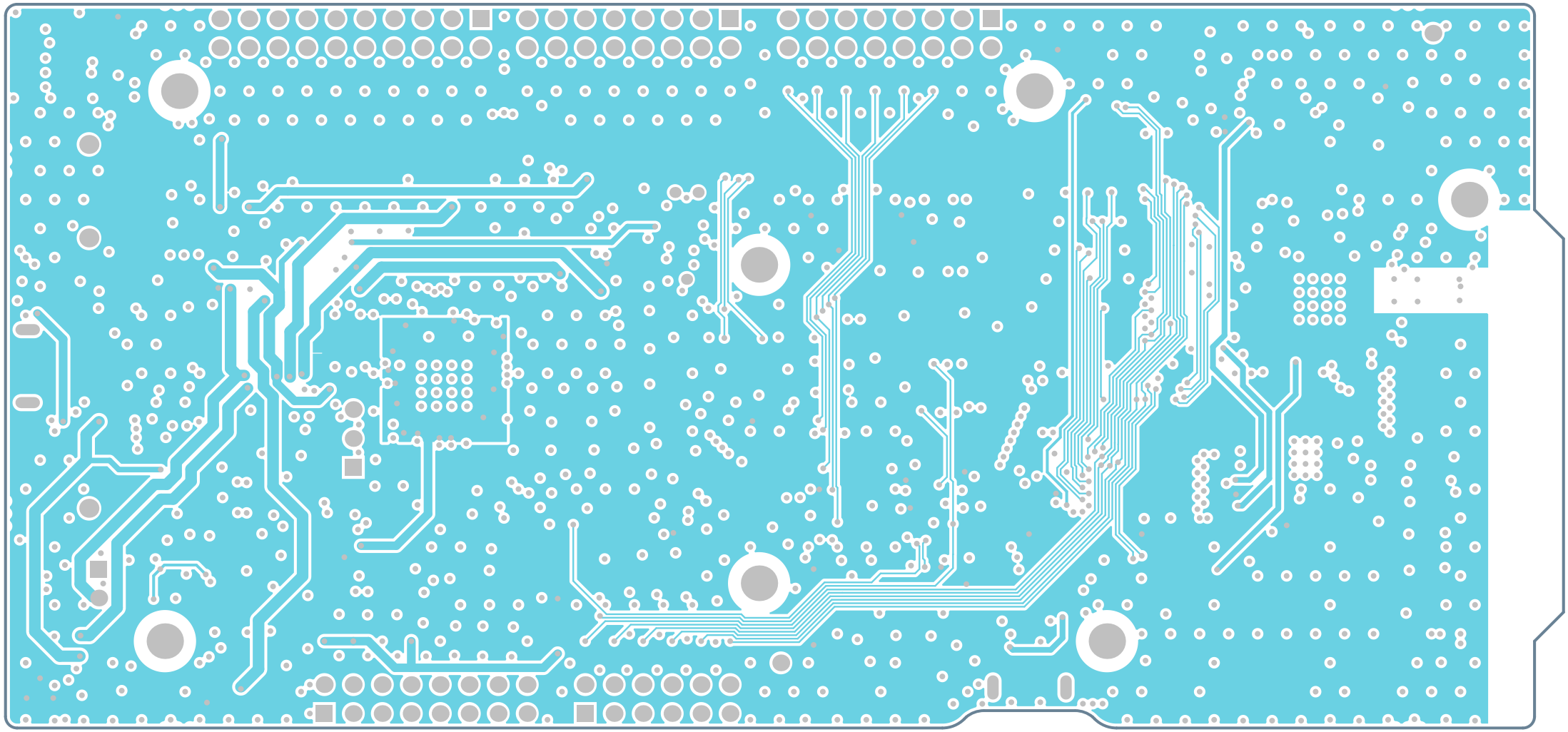

www.seeedstudio.com
Seeed Studio
GND
VDD
P0.04
P0.07
P0.08
P0.11
P0.12
P0.15
P0.16
P0.17
P0.18
P0.19
P0.20
P0.21
P0.22
P0.23
P0.24
P0.25
P0.26
P0.27
P0.28
P0.29
P0.30
P0.31
P0.00
P0.01
P0.02
P0.03
P0.04
P0.05
P0.06
P0.07
P0.08
P0.09
P0.10
P0.11
P0.12
P0.13
P0.14
P0.15
P0.16
P0.17
P0.18
P0.19
P0.20
P0.21
P0.22
P0.23
P0.24
P0.25
P0.26
P0.27
P0.28
P0.29
P0.30
P0.31
HW
Function
Default
Alternative
SWS
TRACE
Alt.
Def.
Function
Button 1
Button 2
CTS
P0.04
P0.07
P0.08
P0.11
P0.12
P0.15
HW
Function
Short
GPIO
P0.00
P0.01
P0.02
P0.03
P0.04
P0.05
P0.06
P0.07
P0.08
P0.09
P0.10
P0.11
P0.12
P0.13
P0.14
P0.15
P0.16
P0.17
P0.18
P0.19
P0.20
P0.21
P0.22
P0.23
P0.24
P0.25
P0.26
P0.27
P0.28
P0.29
P0.30
P0.31
LED 4
LED 3
LED 2
LED 1
Button 1
Button 2
Button 3
Button 4
CTS
RTS
CLK
DIO
DIO
DIO
DIO
SWDIO
SWCLK
RESET
RTS
CTS
RXD
TXD
SCL
SDA
HW
Function
Short
GPIO
P0.00
P0.01
P0.02
P0.03
P0.04
P0.05
P0.06
P0.07
P0.08
P0.09
P0.10
P0.11
P0.12
P0.13
P0.14
P0.15
P0.16
P0.17
P0.18
P0.19
P0.20
P0.21
P0.22
P0.23
P0.24
P0.25
P0.26
P0.27
P0.28
P0.29
P0.30
P0.31
SWDIO
SWCLK
RESET
RTS
CTS
RXD
TXD
SCL
SDA
HW
Function
GPIO
P0.00
P0.01
P0.02
P0.03
P0.04
P0.05
P0.06
P0.07
P0.08
P0.09
P0.10
P0.11
P0.12
P0.13
P0.14
P0.15
P0.16
P0.17
P0.18
P0.19
P0.20
P0.21
P0.22
P0.23
P0.24
P0.25
P0.26
P0.27
P0.28
P0.29
P0.30
P0.31

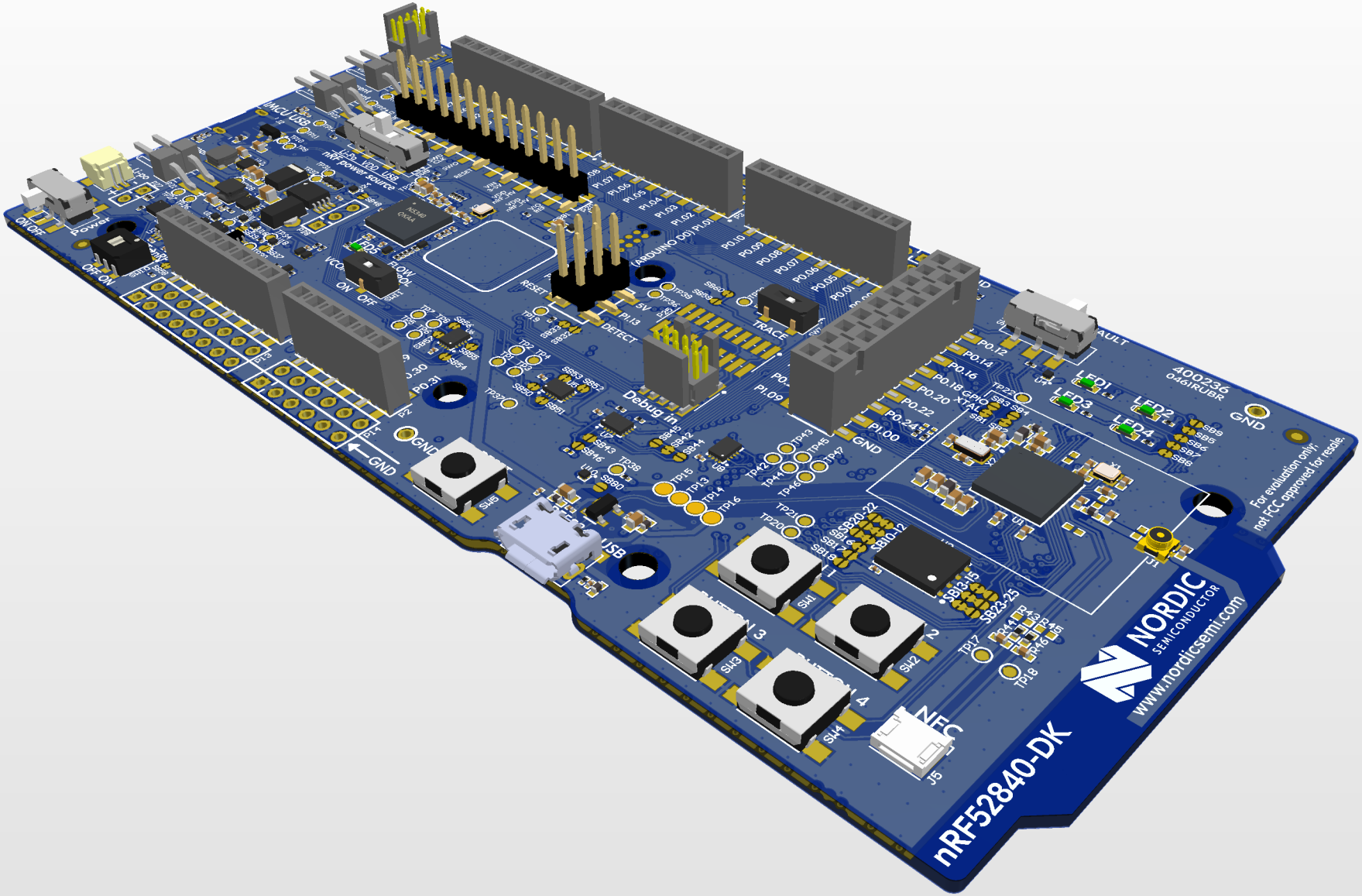
nRF52840-DK
NORDIC
SEMICONDUCTOR
www.nordicsemi.com
For evaluation only; not FCC approved for resale.
Debug in
USB
NFC
GND
400236
046IRUBR

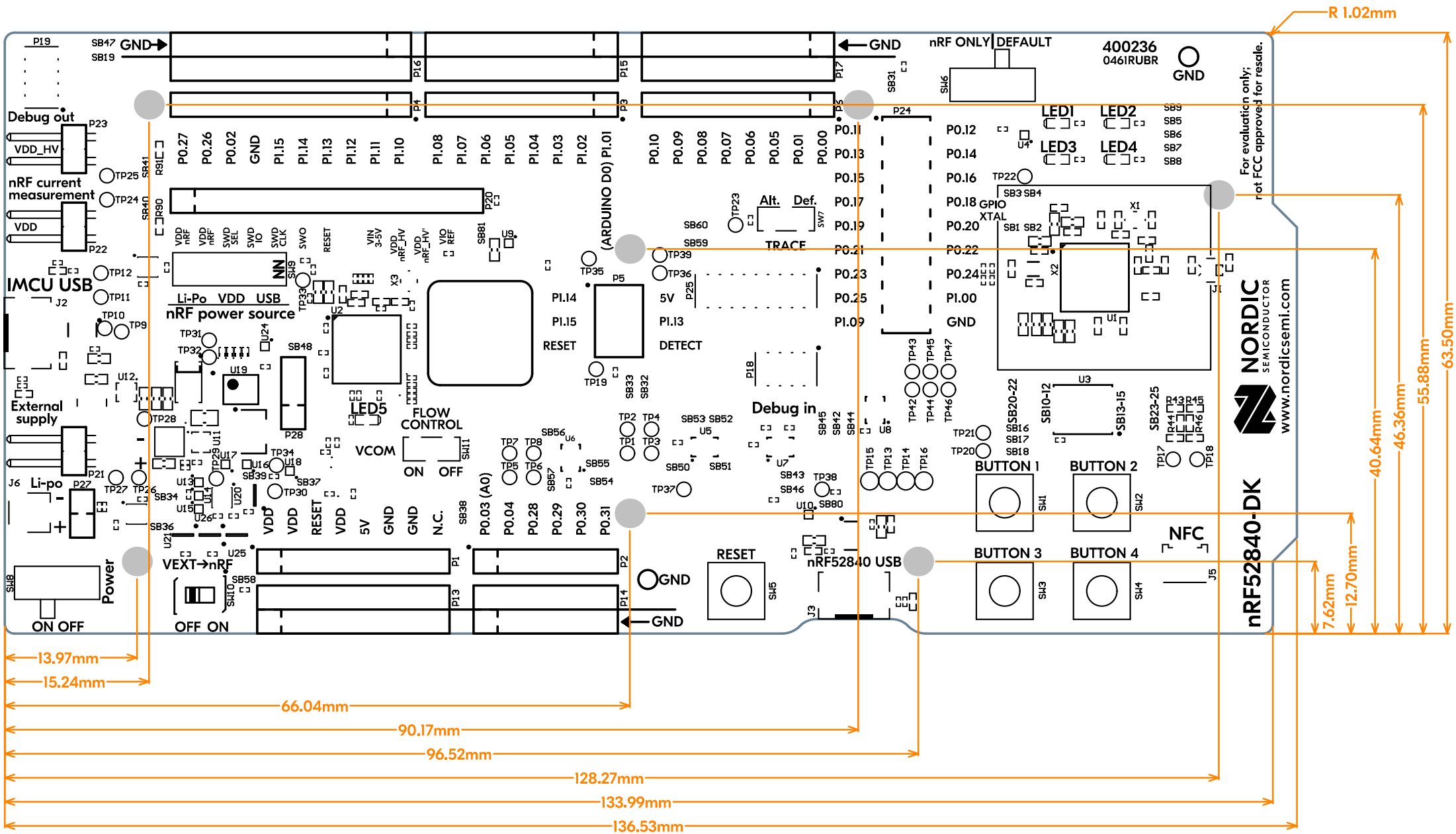
R 1.02mm
63.50mm
55.88mm
46.36mm
40.64mm
12.70mm
7.62mm
13.97mm
15.24mm
66.04mm
90.17mm
96.52mm
128.27mm
133.99mm
136.53mm
nRF52840-DK
NORDIC SEMICONDUCTOR
www.nordicsemi.com
IMCU USB
nRF power source
Li-Po VDD USB
External supply
Li-po
Power
ON OFF
OFF ON
VEXT→nRF
LED5
FLOW CONTROL
VCOM
ON OFF
Debug out
VDD_HV
nRF current measurement
VDD
Debug in
TRACE
Alt. Def.
(ARDUINO DO) P1.01
P1.14
P1.15
RESET
5V
P1.13
DETECT
P0.03 (A0)
P0.04
P0.28
P0.29
P0.30
P0.31
P0.11
P0.13
P0.15
P0.17
P0.19
P0.21
P0.23
P0.25
P1.09
P0.12
P0.14
P0.16
P0.18 GPIO
P0.20 XTAL
P0.22
P0.24
P1.00
GND
nRF ONLY DEFAULT
400236
0461RUBR
For evaluation only;
not FCC approved for resale.
LED1
LED2
LED3
LED4
BUTTON 1
BUTTON 2
BUTTON 3
BUTTON 4
RESET
NFC
nRF52840 USB