CS 300
HOMEWORK 5
by Berna YILDIRAN

QUESTION #1
Dijkstra's Weighted Shortest Path Algorithm

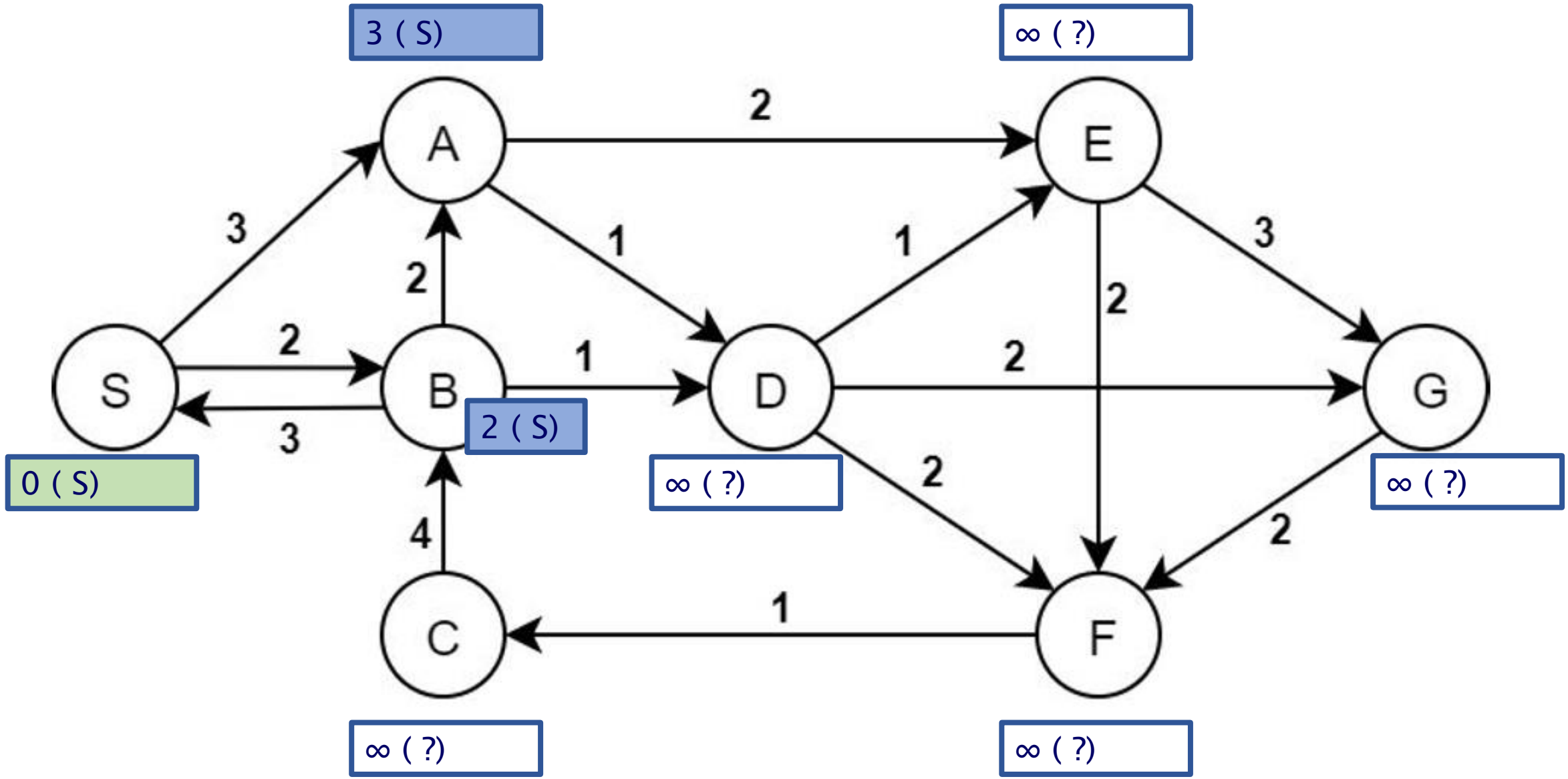
3 (S)
∞ (?)
A
E
2
3
1
1
3
2
2
S
B
D
G
2
1
2
2 (S)
3
0 (S)
∞ (?)
2
∞ (?)
4
2
C
F
1
∞ (?)
∞ (?)

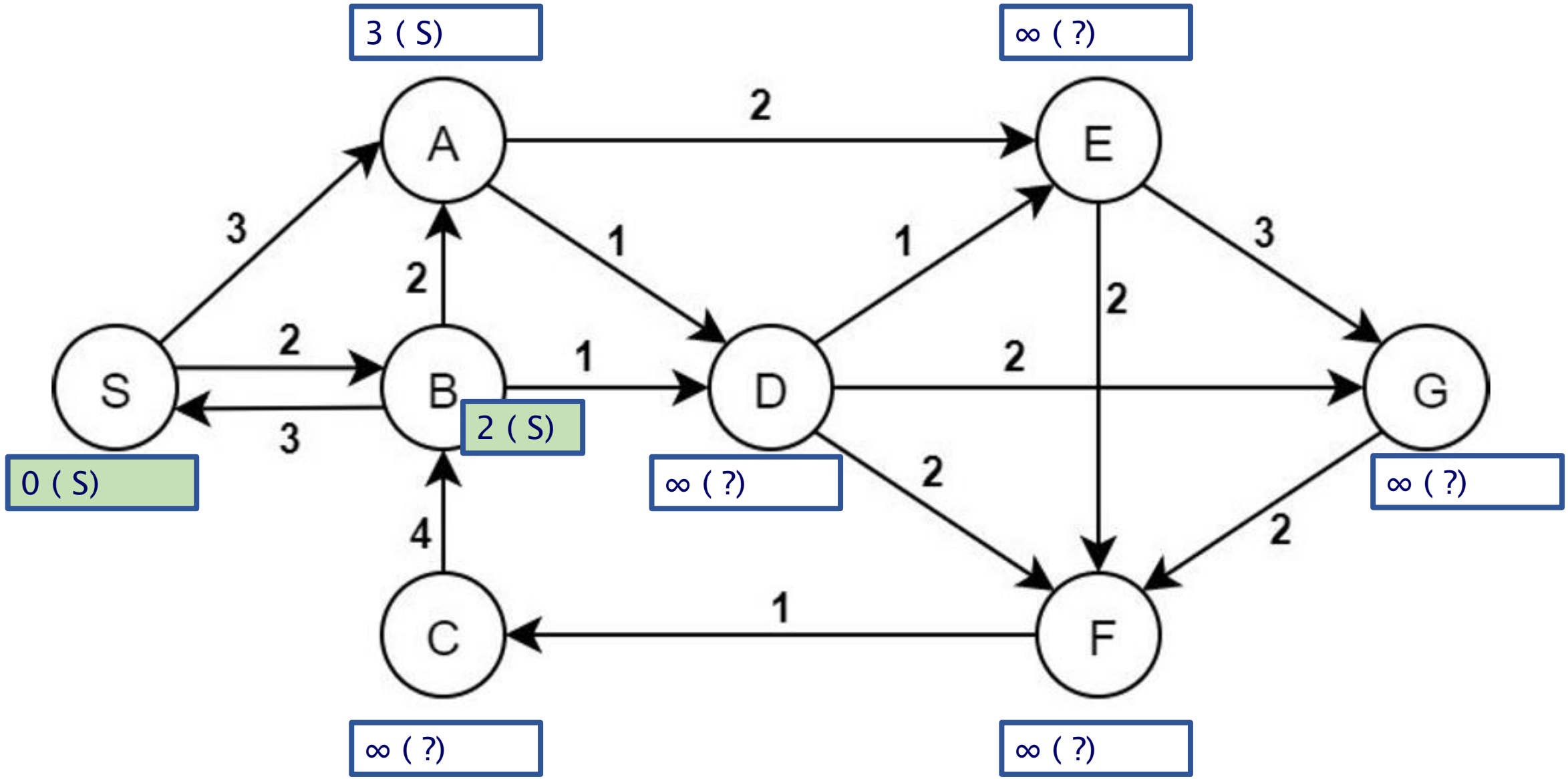
3 (S)
∞ (?)
A
2
E
3
1
1
3
2
2
S
2
B
1
D
2
G
3
2 (S)
0 (S)
∞ (?)
2
∞ (?)
4
2
1
C
F
∞ (?)
∞ (?)

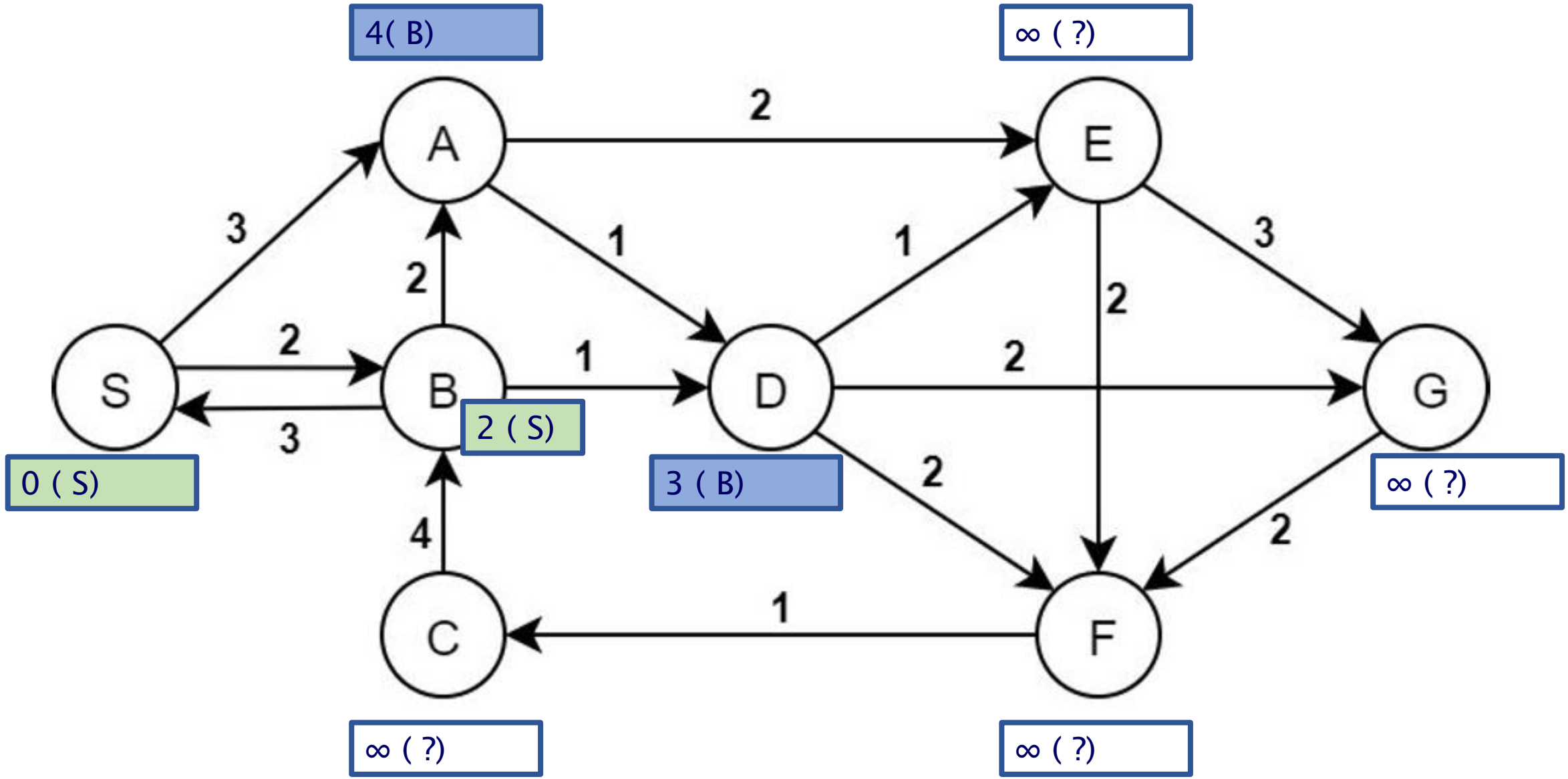
4(B)
∞ (?)
A
2
E
3
1
1
3
2
2
S
2
B
1
D
2
G
3
2 (S)
0 (S)
3 (B)
2
∞ (?)
4
2
1
C
F
∞ (?)
∞ (?)

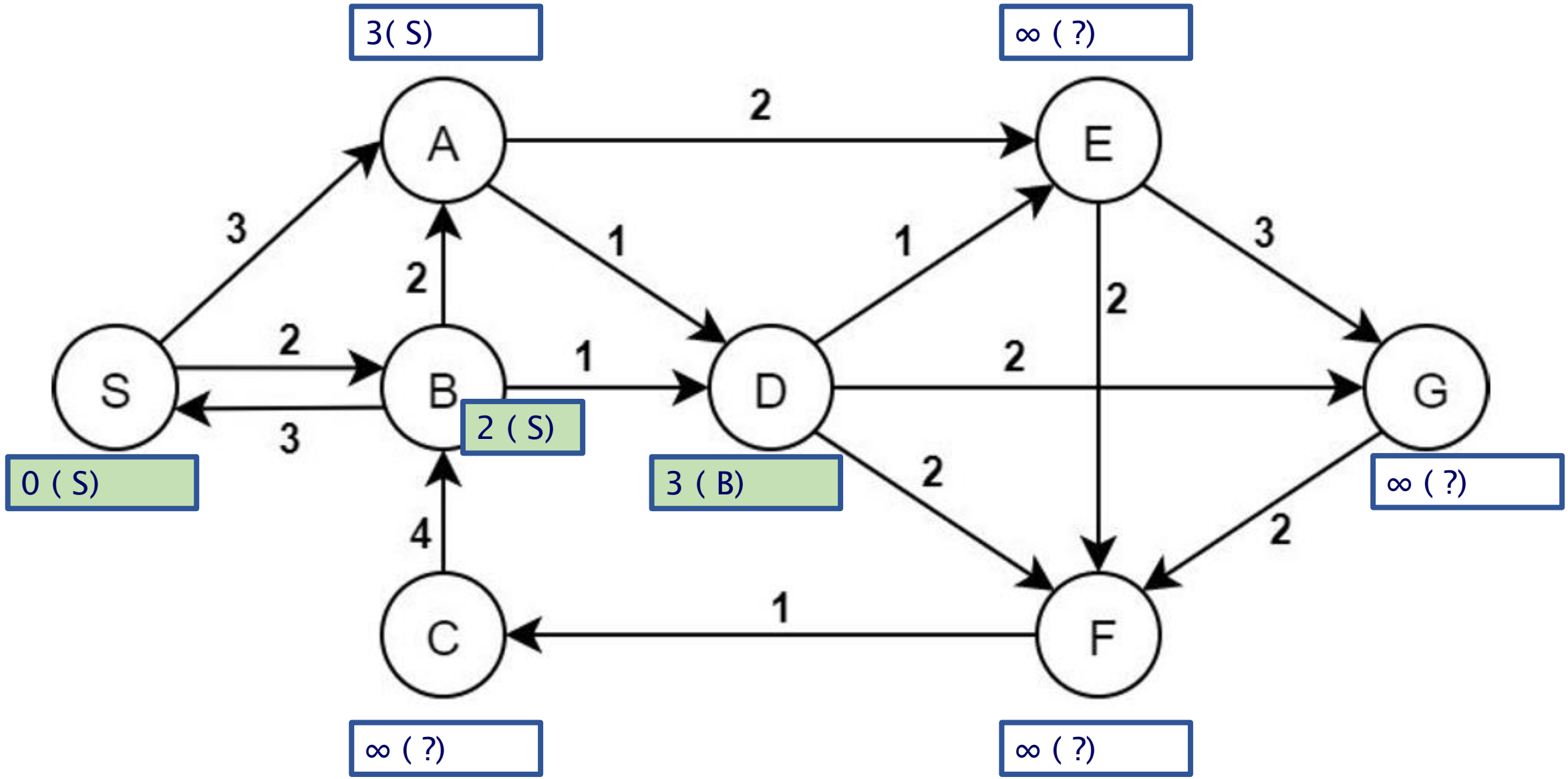
3(S)
∞ (?)
A
2
E
3
1
1
3
2
2
S
2
B
1
D
2
G
3
2 (S)
0 (S)
3 (B)
2
∞ (?)
4
2
1
C
F
∞ (?)
∞ (?)

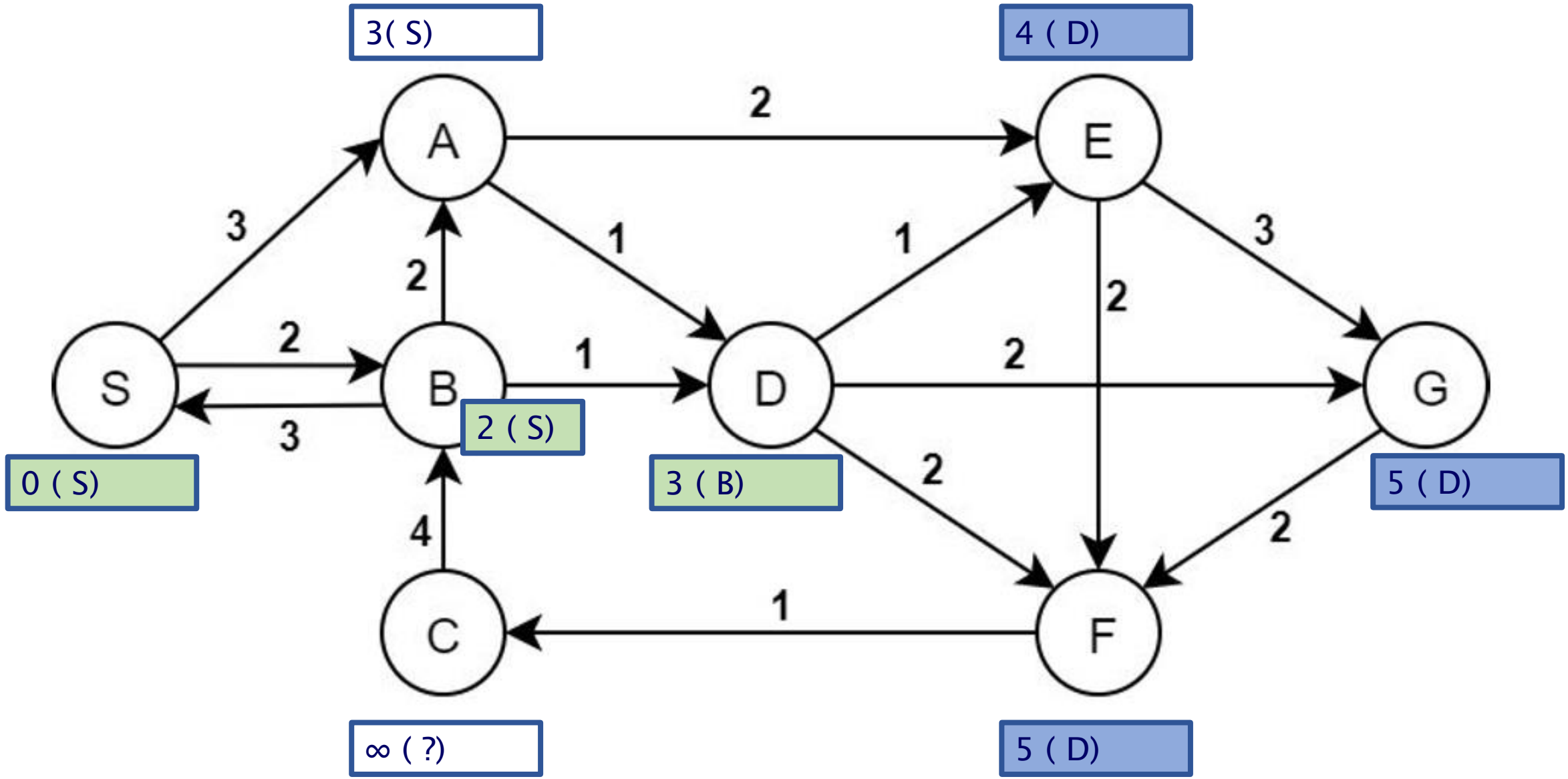
3(S)
4 (D)
A
E
2
3
1
1
3
2
2
S
2
B
1
D
2
G
3
2 (S)
0 (S)
3 (B)
2
5 (D)
4
2
C
1
F
∞ (?)
5 (D)

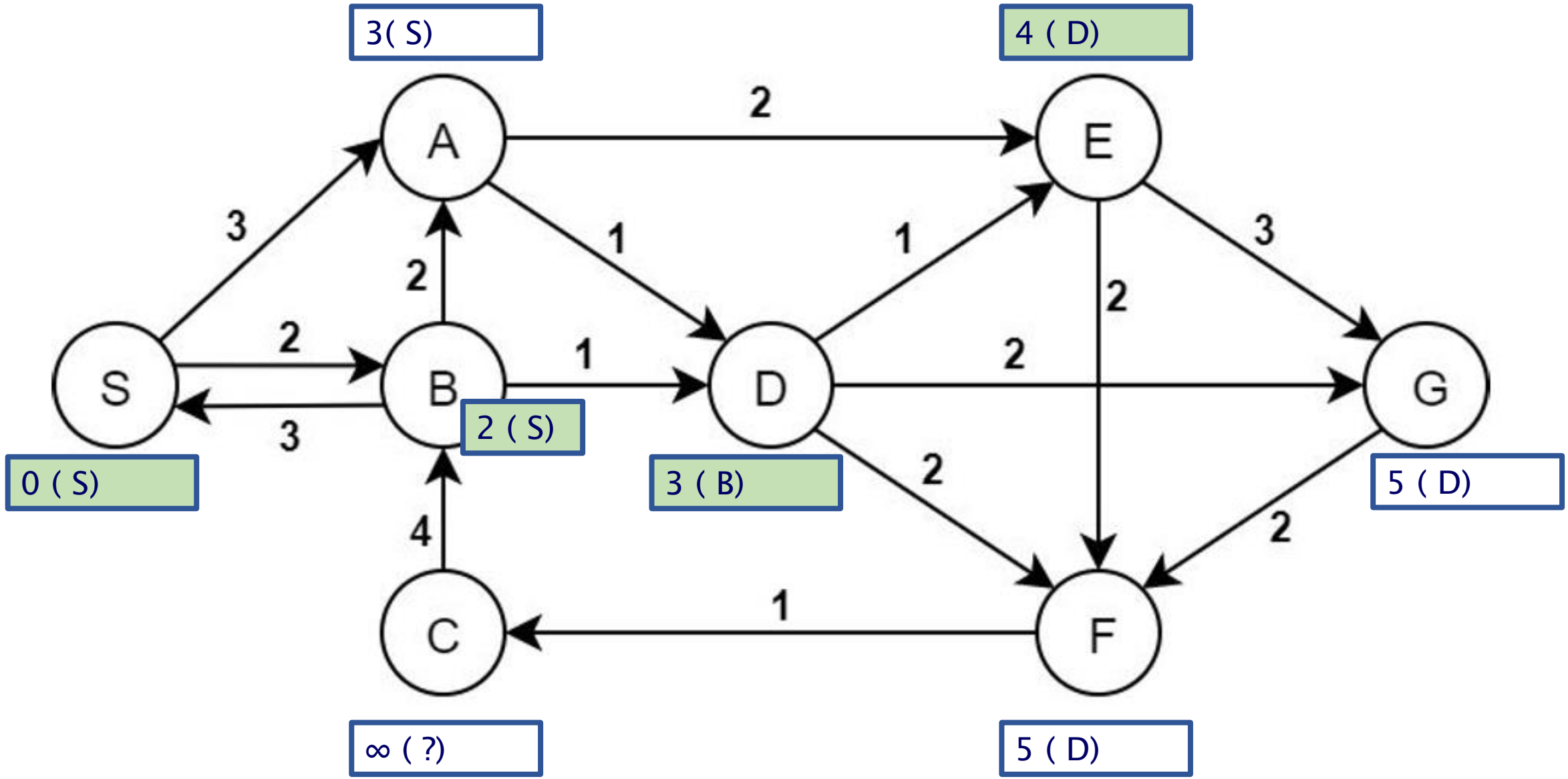
3(S)
4 (D)
A
E
2
3
1
1
3
2
2
S
B
D
G
2
1
2
3
2 (S)
0 (S)
3 (B)
2
5 (D)
4
2
C
1
F
∞ (?)
5 (D)

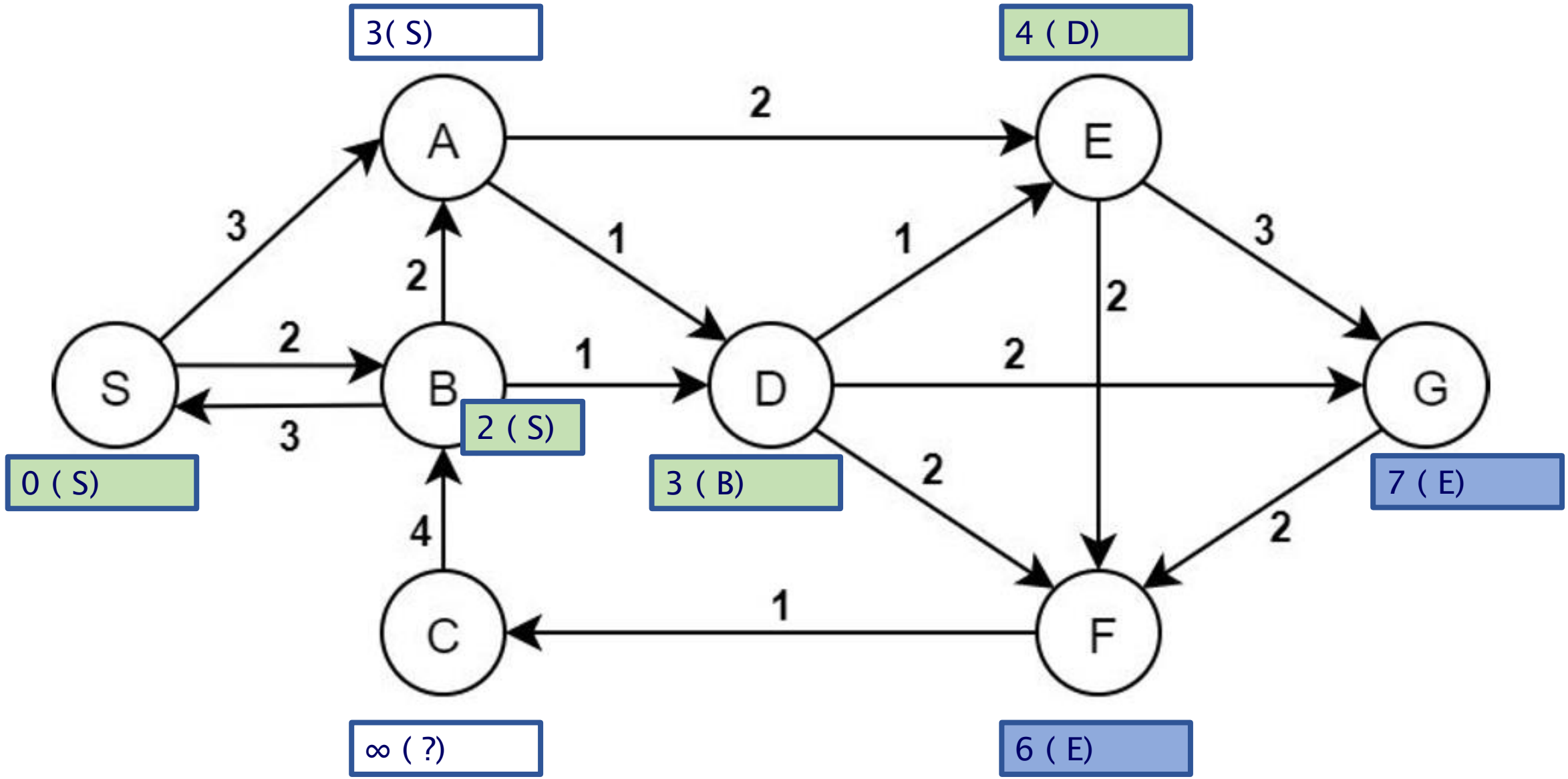
3(S)
4 (D)
A
E
2
3
1
1
3
2
2
S
B
D
G
2
1
2
3
2 (S)
0 (S)
3 (B)
2
7 (E)
4
2
C
1
F
∞ (?)
6 (E)

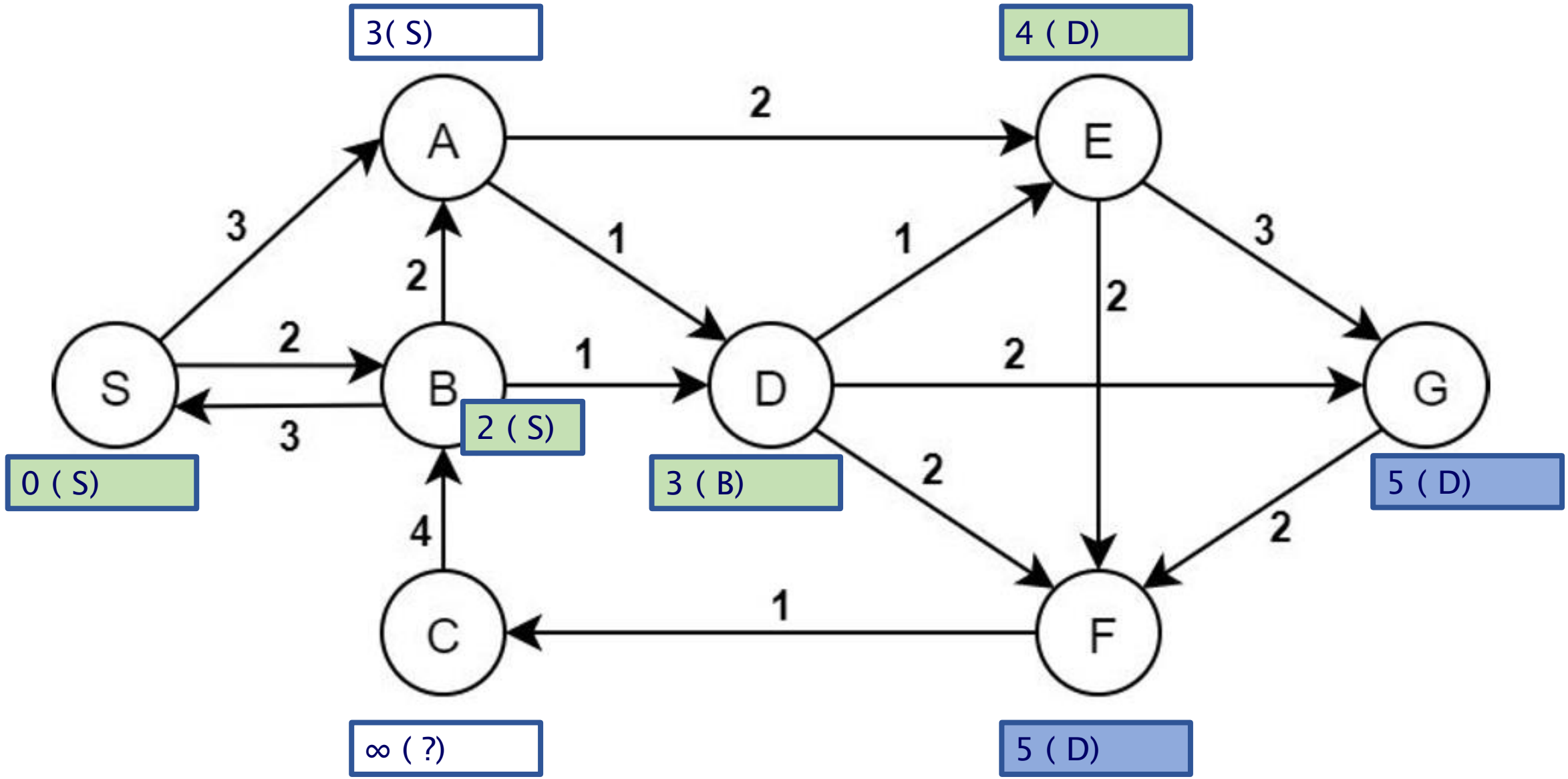
3(S)
4 (D)
A
E
2
3
1
1
3
2
2
S
2
B
1
D
2
G
3
2 (S)
0 (S)
3 (B)
2
5 (D)
4
2
C
1
F
∞ (?)
5 (D)

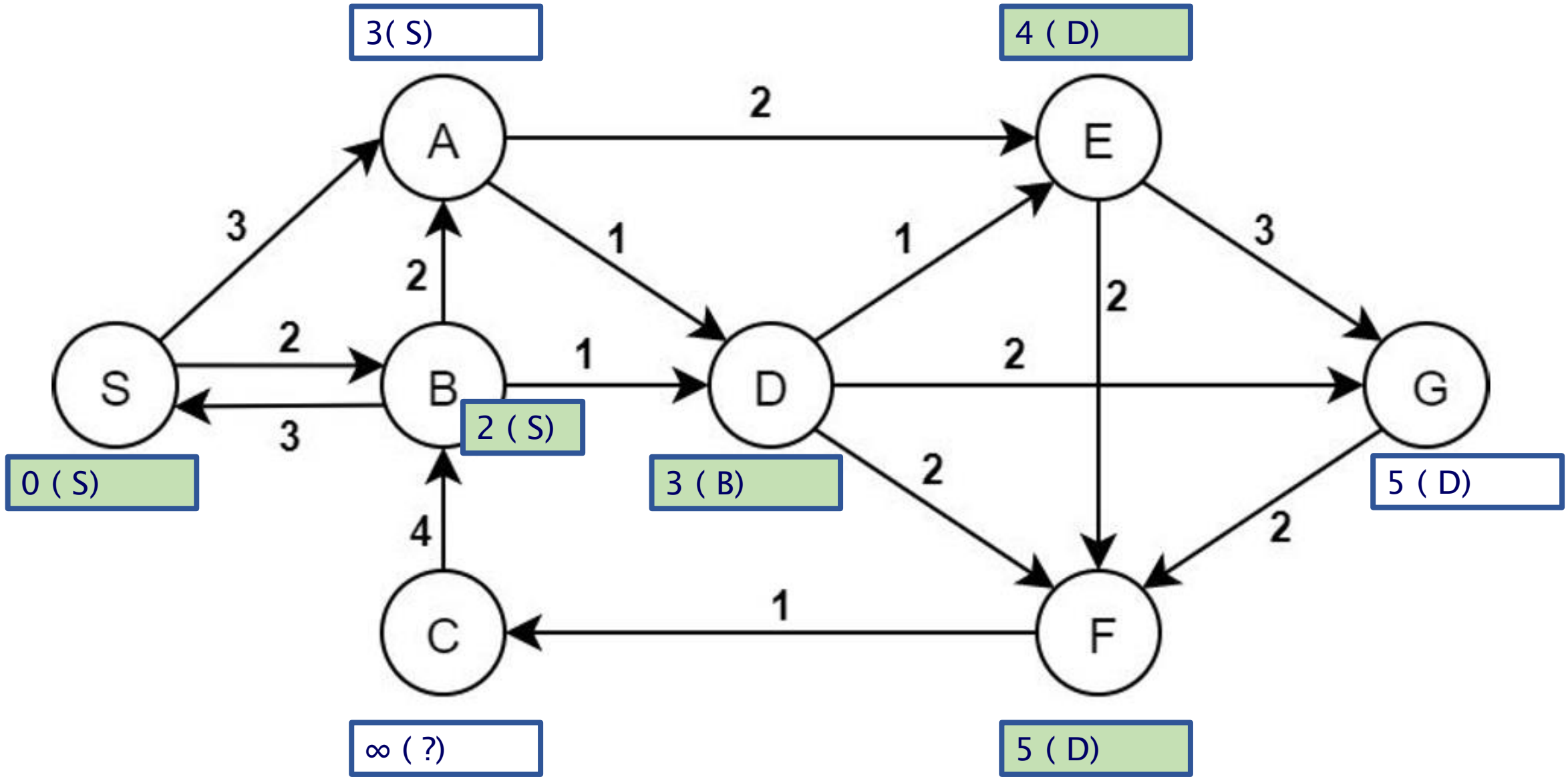
3(S)
4 (D)
A
E
2
3
1
1
3
2
2
S
B
D
G
2
1
2
3
2 (S)
0 (S)
3 (B)
2
5 (D)
2
4
C
1
F
∞ (?)
5 (D)

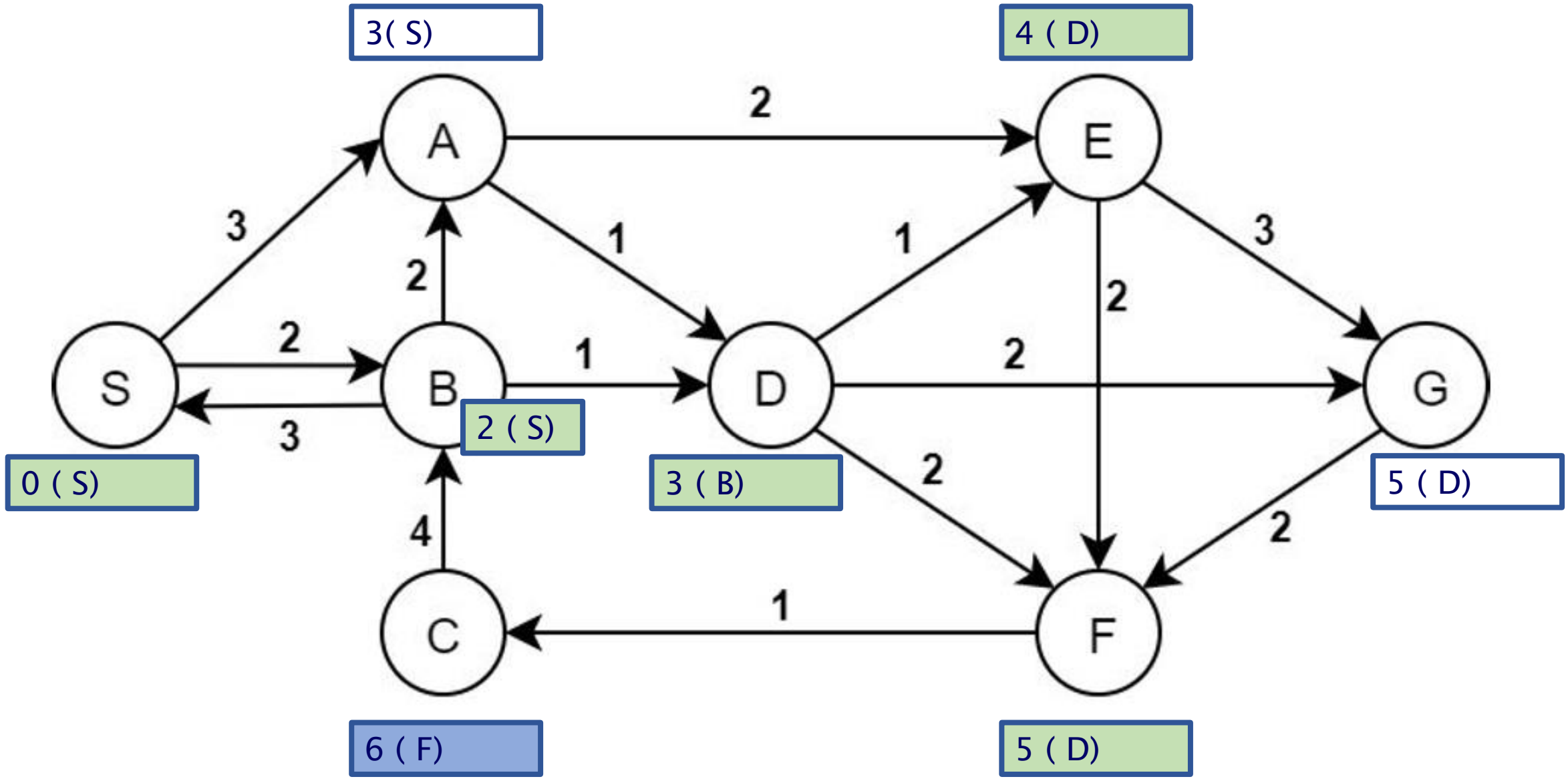
3(S)
4 (D)
A
E
2
3
1
1
3
2
2
S
2
B
1
D
2
G
3
2 (S)
0 (S)
3 (B)
2
5 (D)
4
2
1
C
F
6 (F)
5 (D)

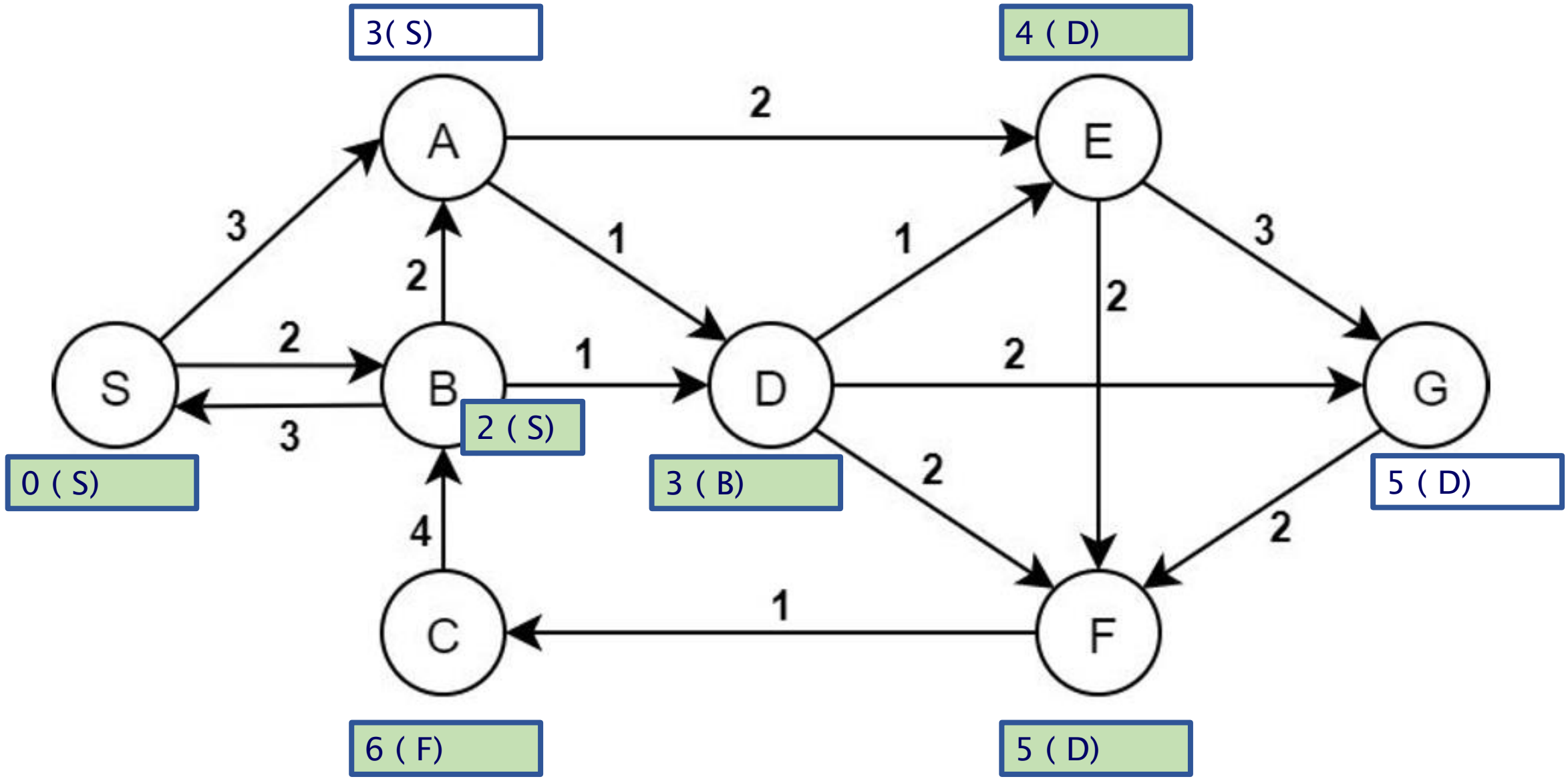
3(S)
4 (D)
A
E
2
3
1
1
3
2
2
S
2
B
1
D
2
G
3
2 (S)
0 (S)
3 (B)
2
5 (D)
4
2
1
C
F
6 (F)
5 (D)

QUESTION #2
Prim’s Minimum Spanning Tree Algorithm

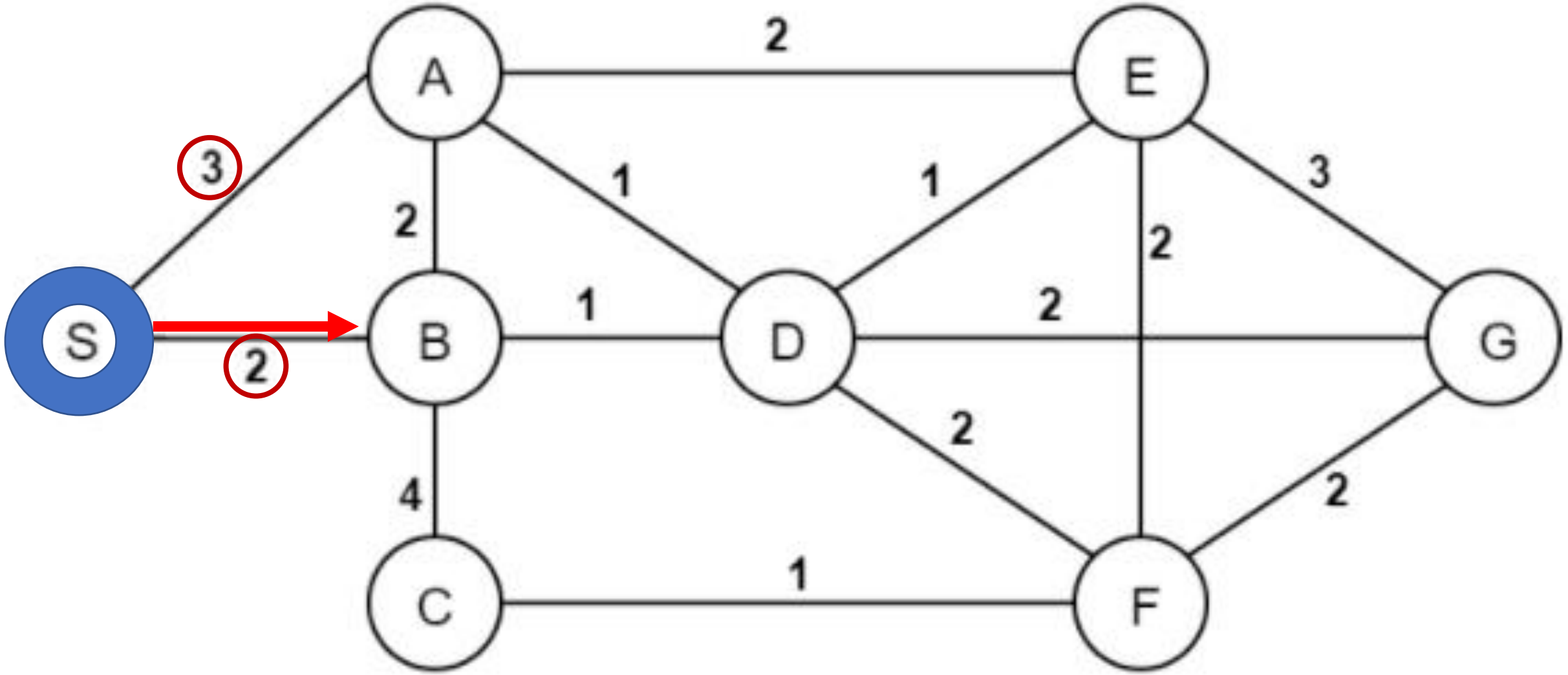

Visited ={S, }

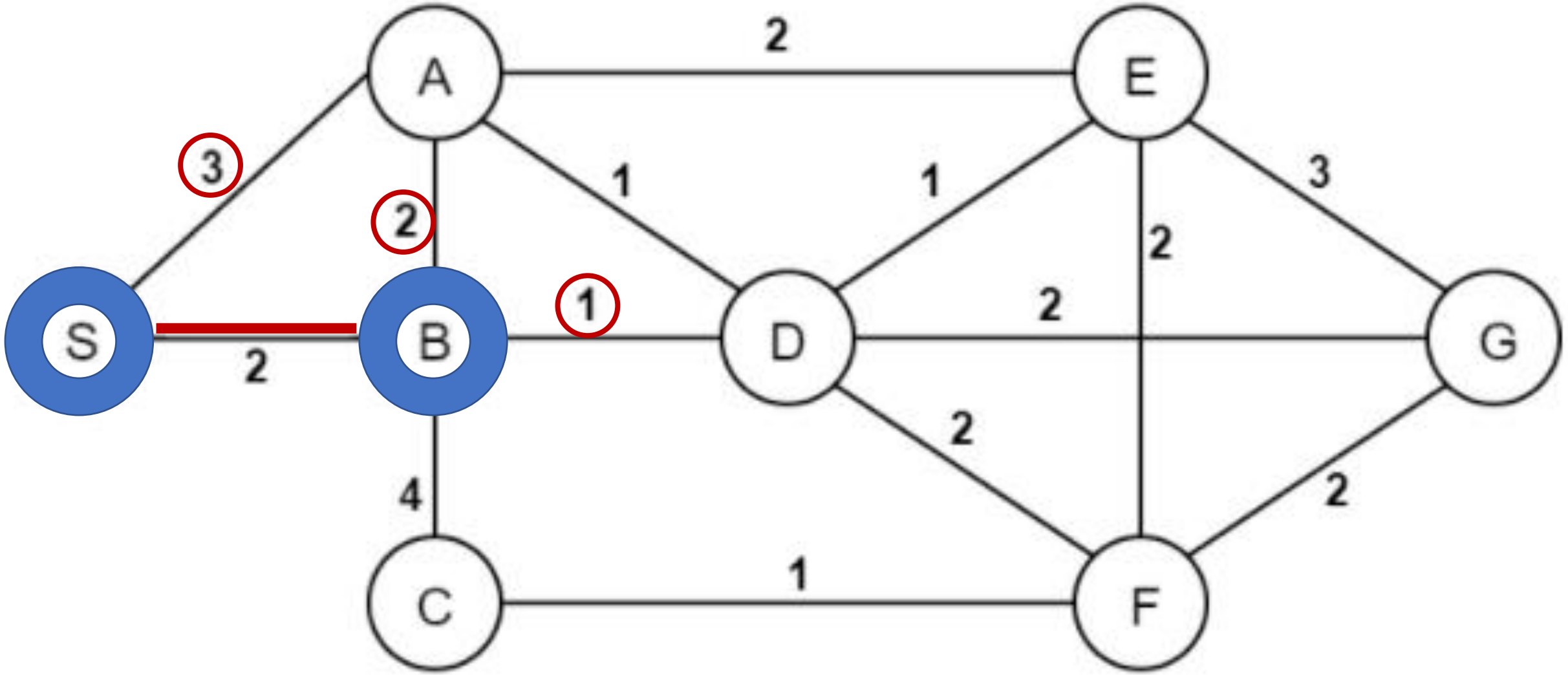

Visited ={S, B, }

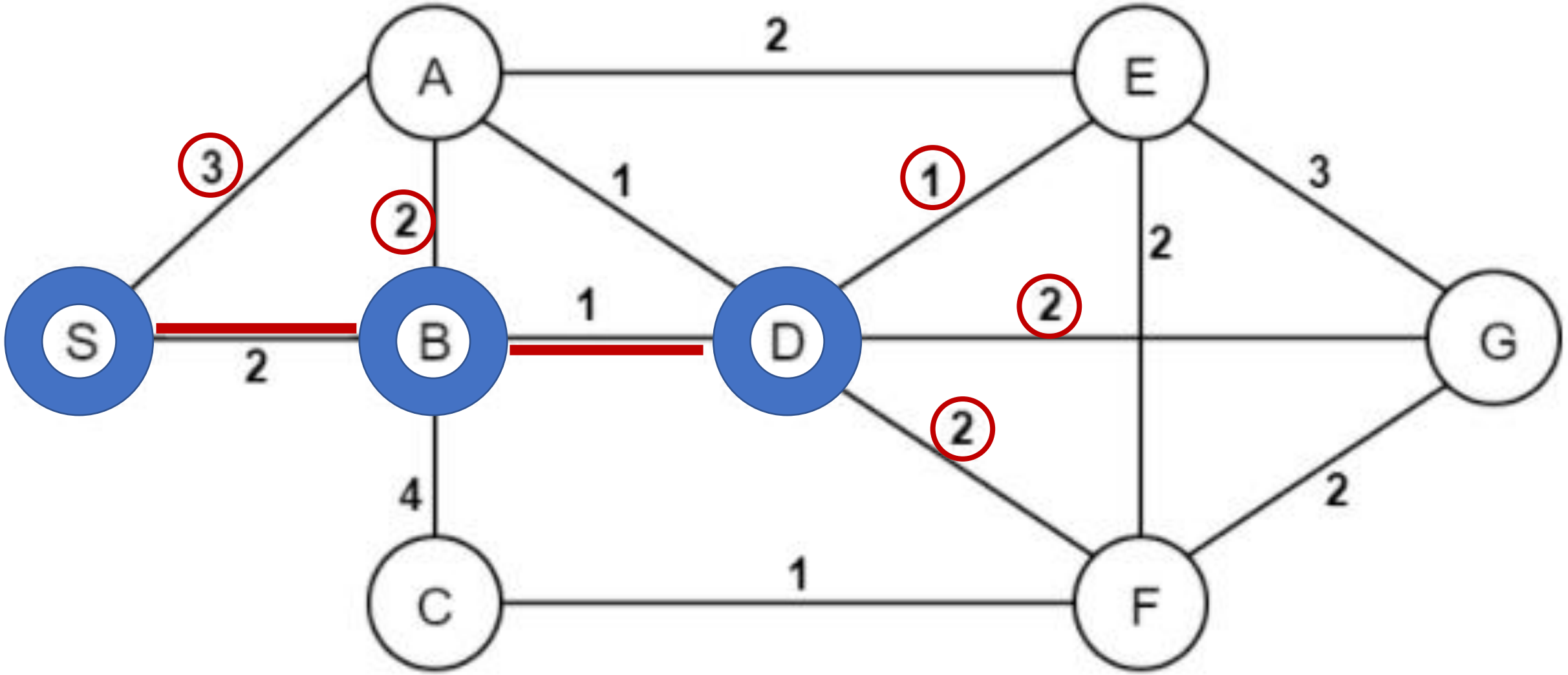

Visited ={S, B, D, }

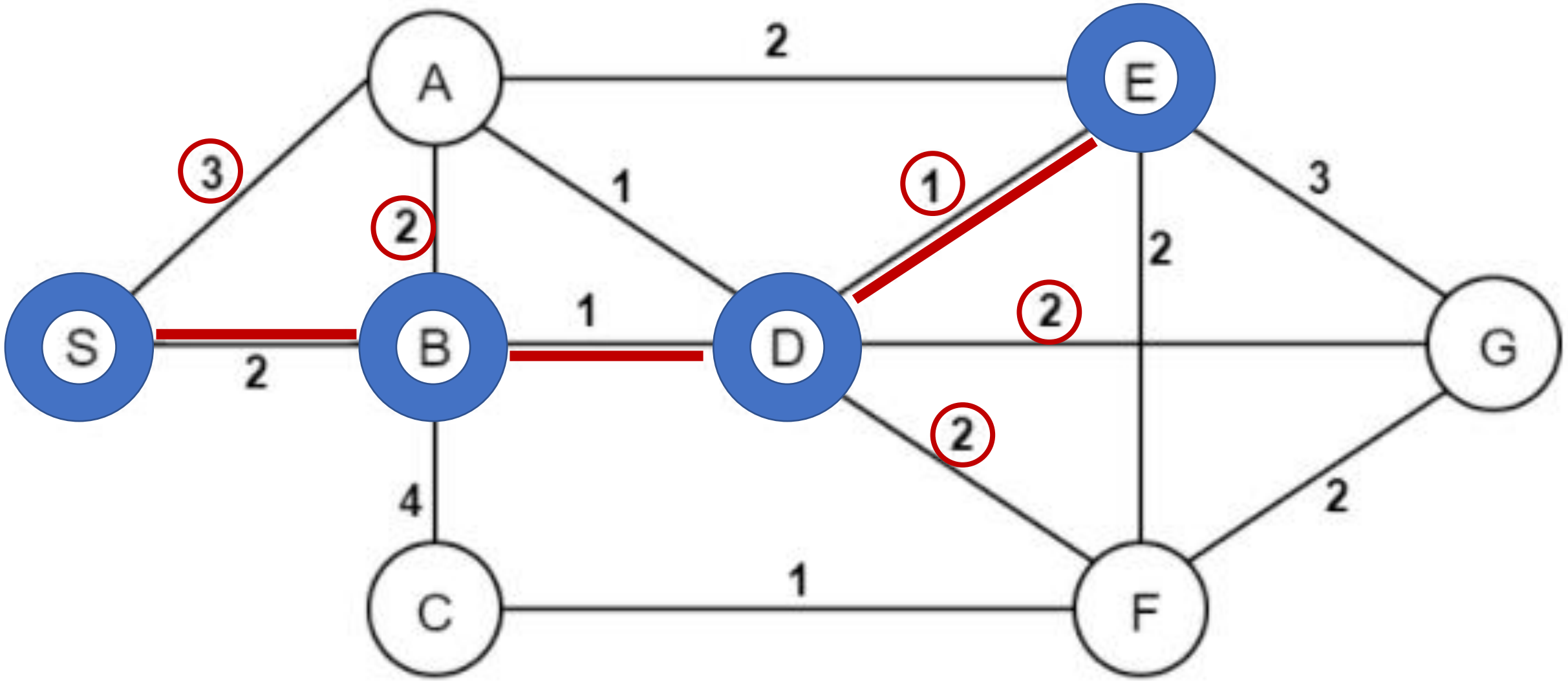

Visited ={S, B, D, E, }

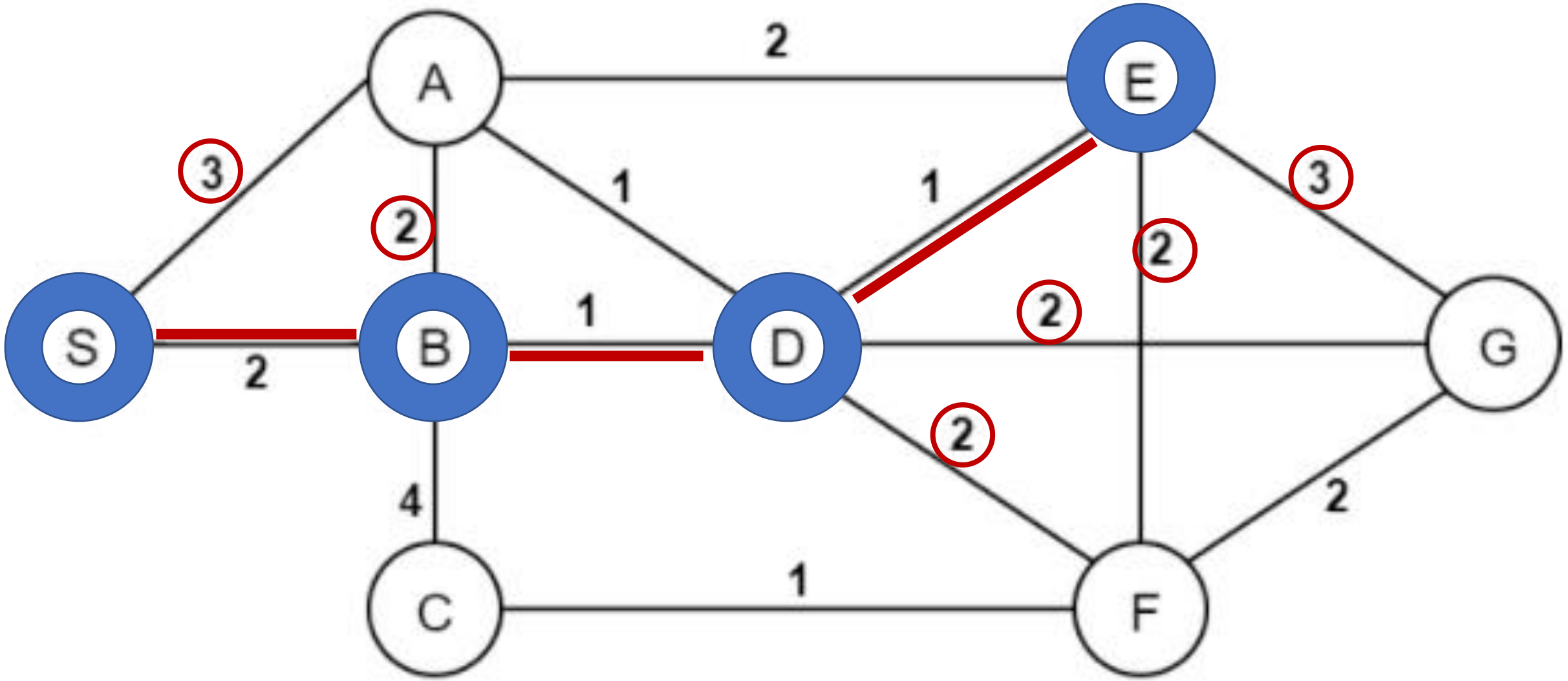

Visited ={S, B, D, E, }

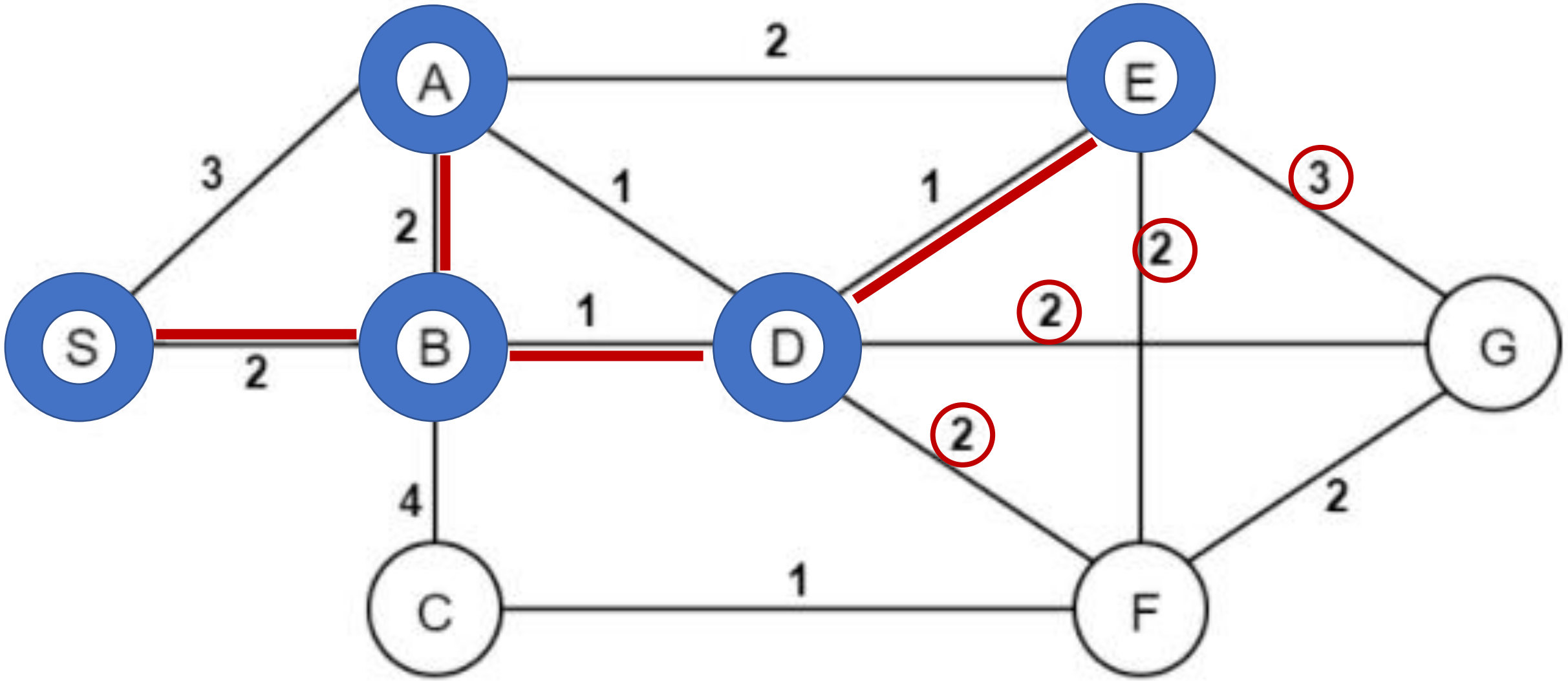

Visited ={S, B, D, E, A, }

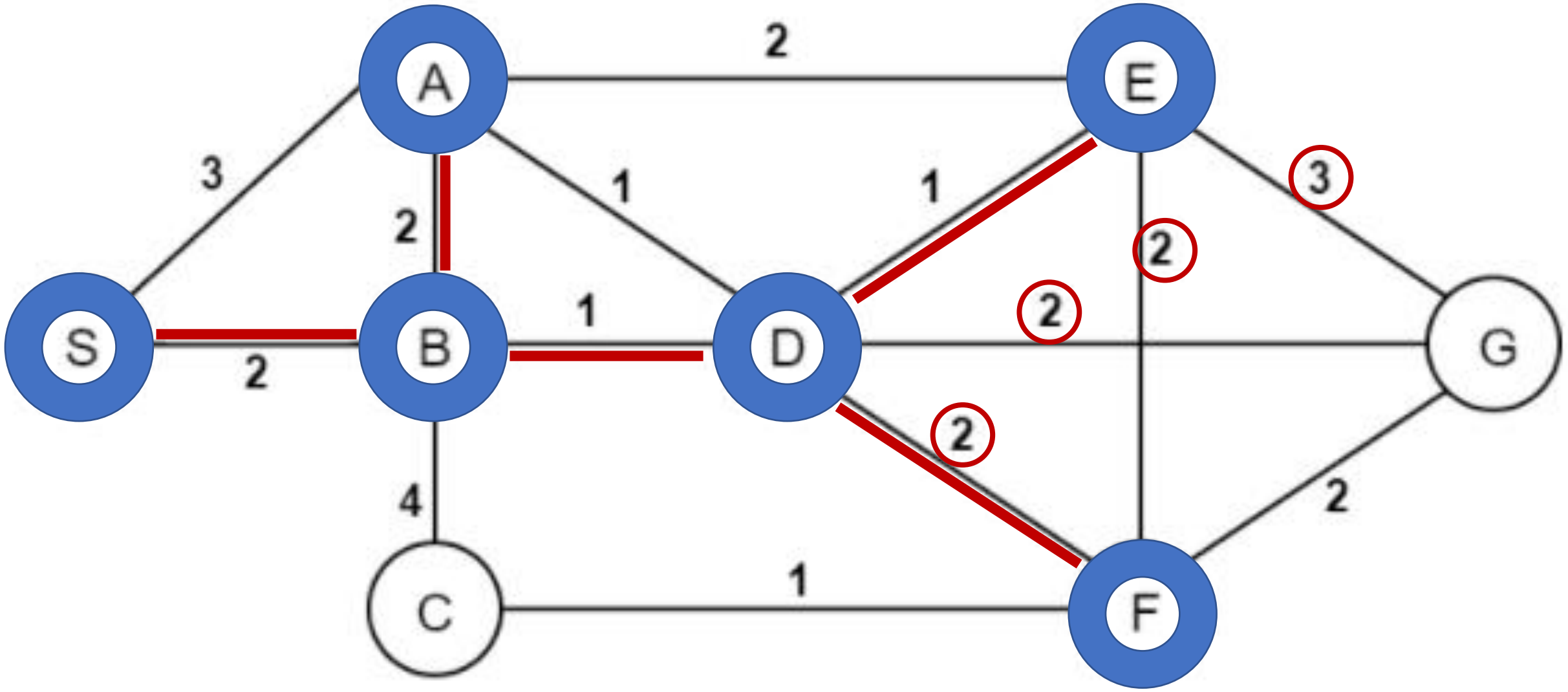

Visited ={S, B, D, E, A, F, }

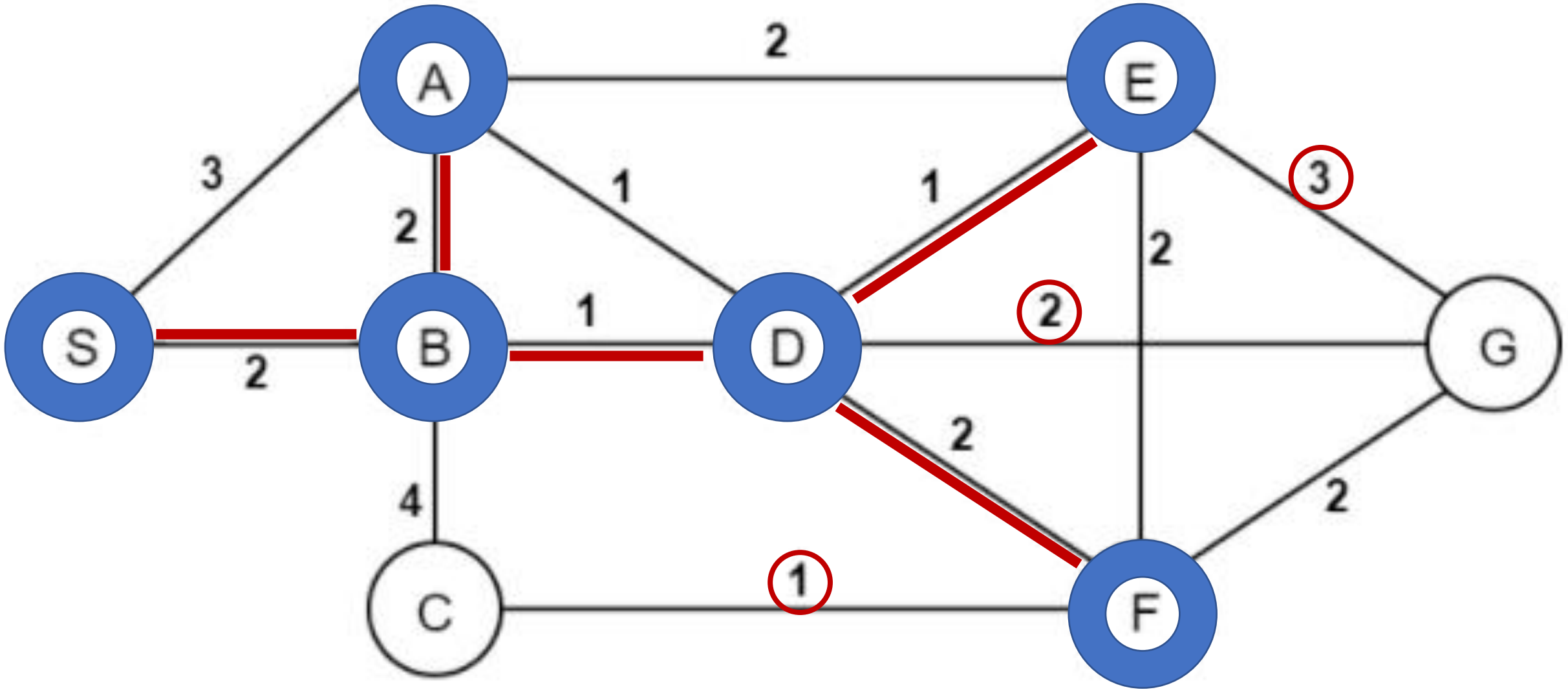

Visited ={S, B, D, E, A, F, }

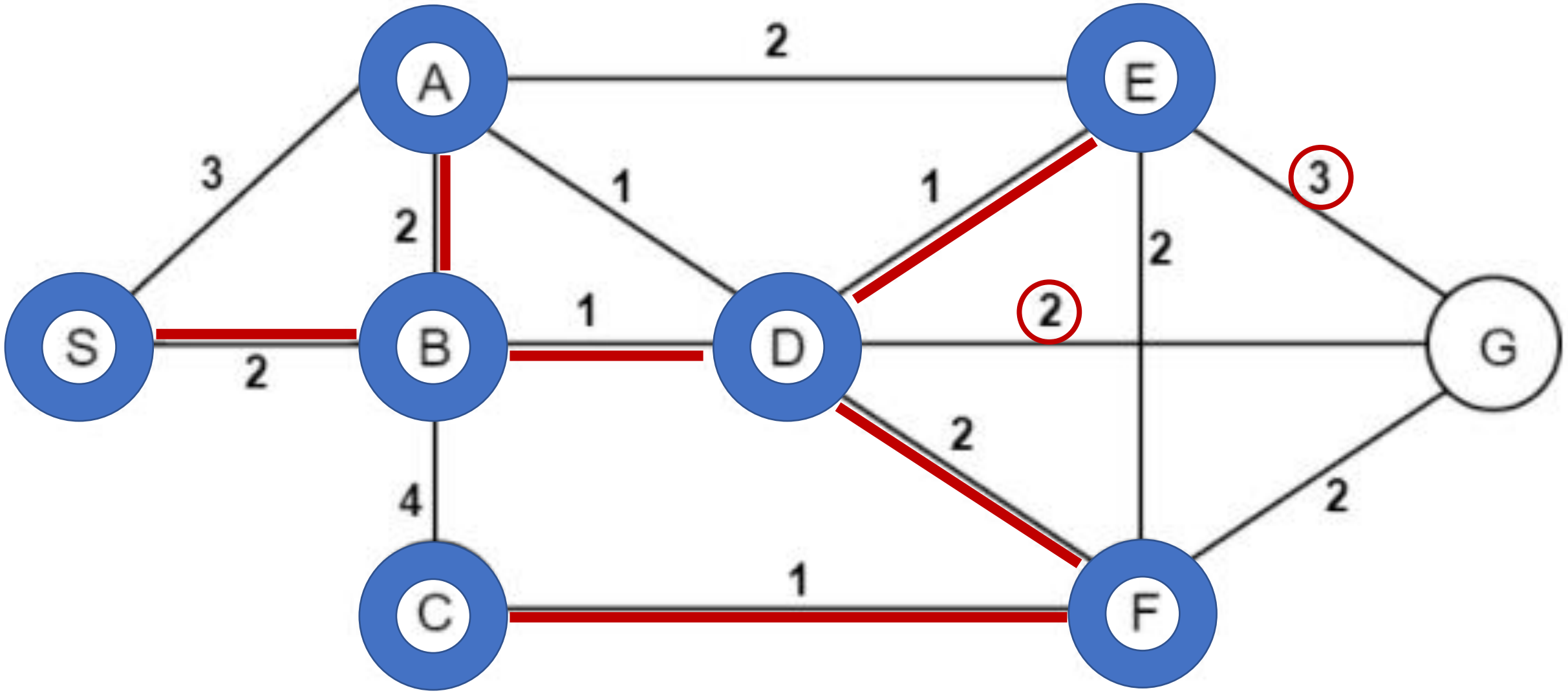

Visited ={S, B, D, E, A, F, C, }

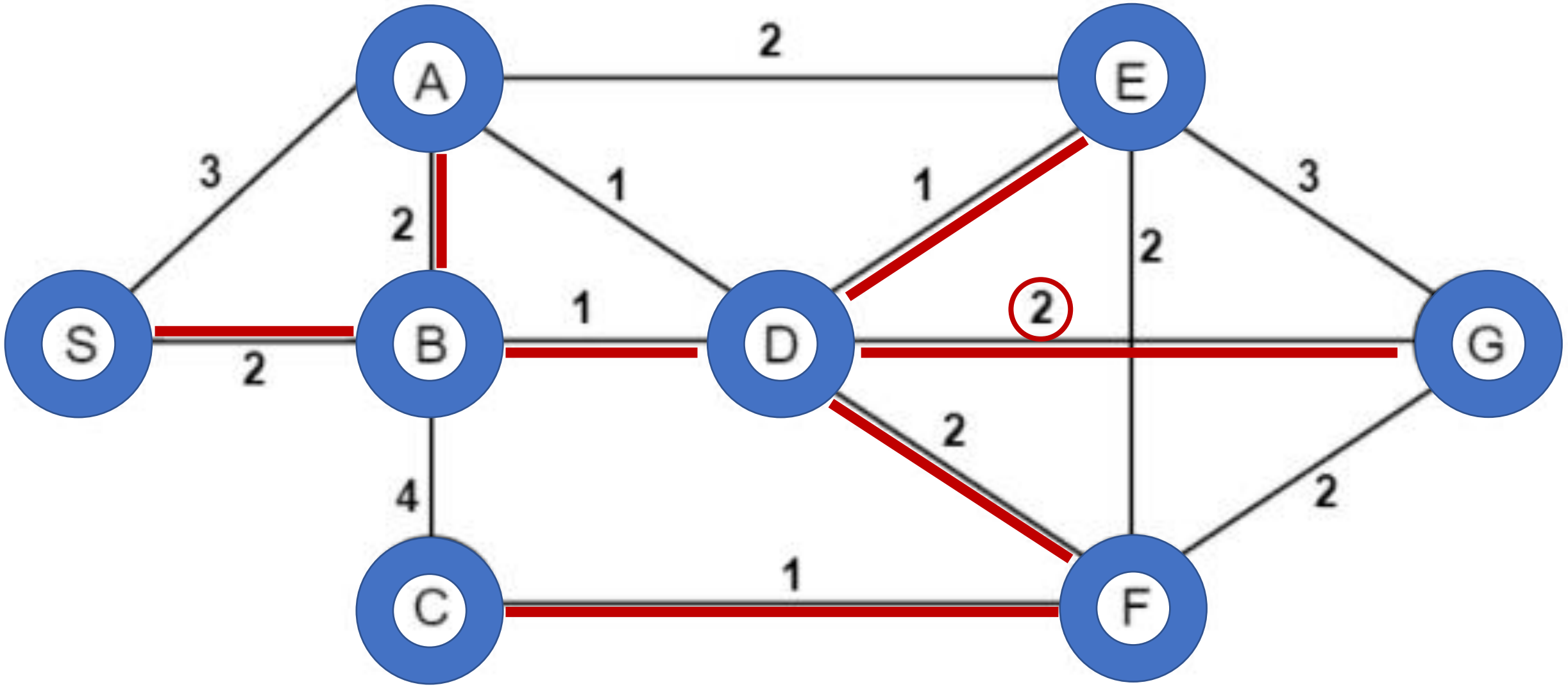

Visited ={S, B, D, E, A, F, C, G}

QUESTION #3
Kruskal's Minimum Spanning Tree Algorithm

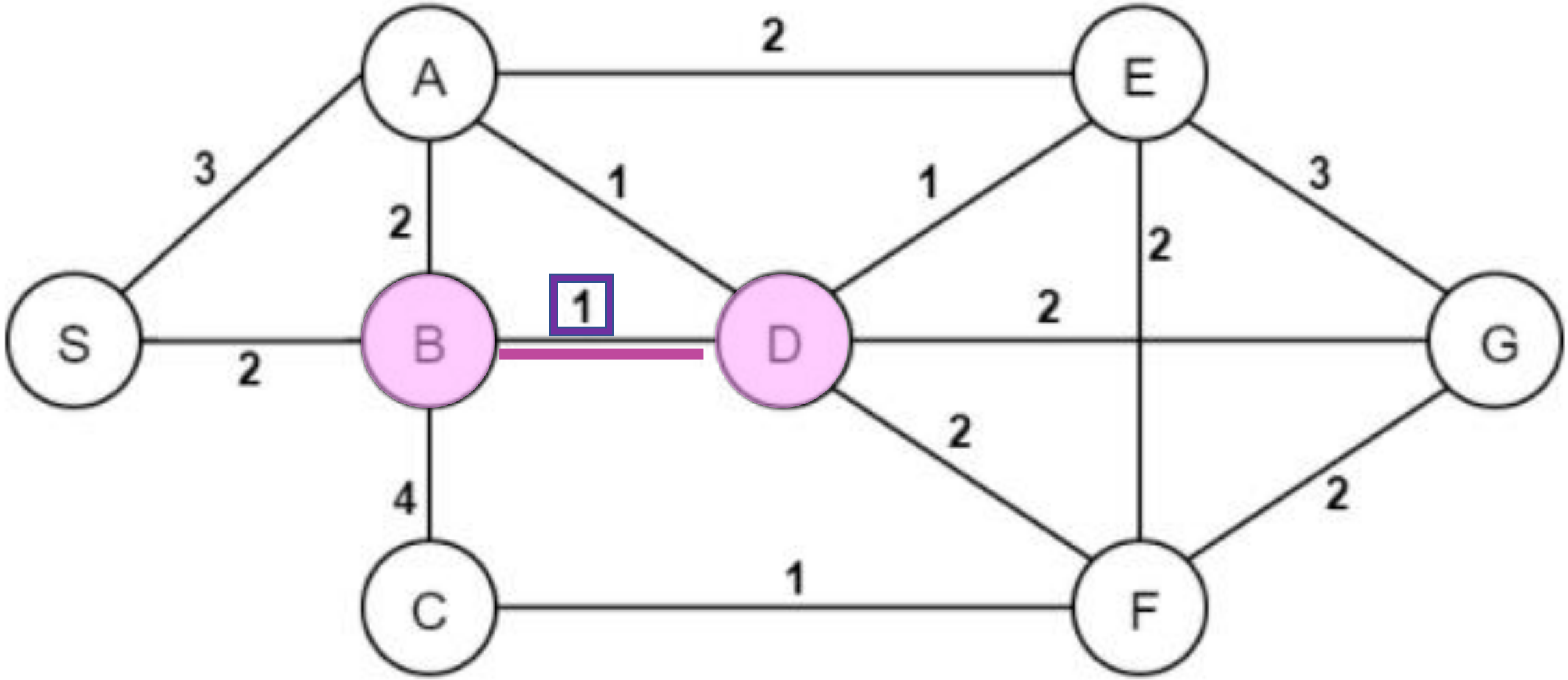

Visited ={B, D }

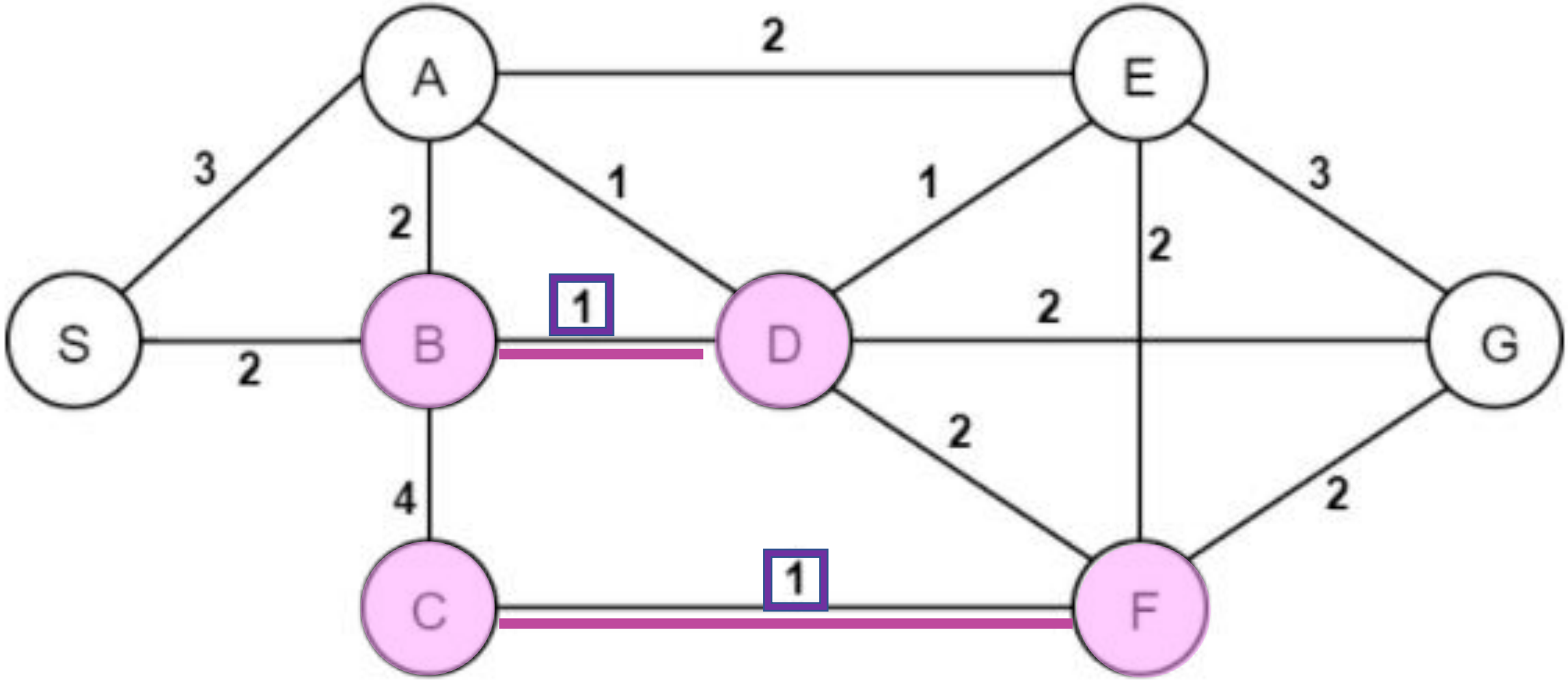

Visited ={B, D , F, C, }

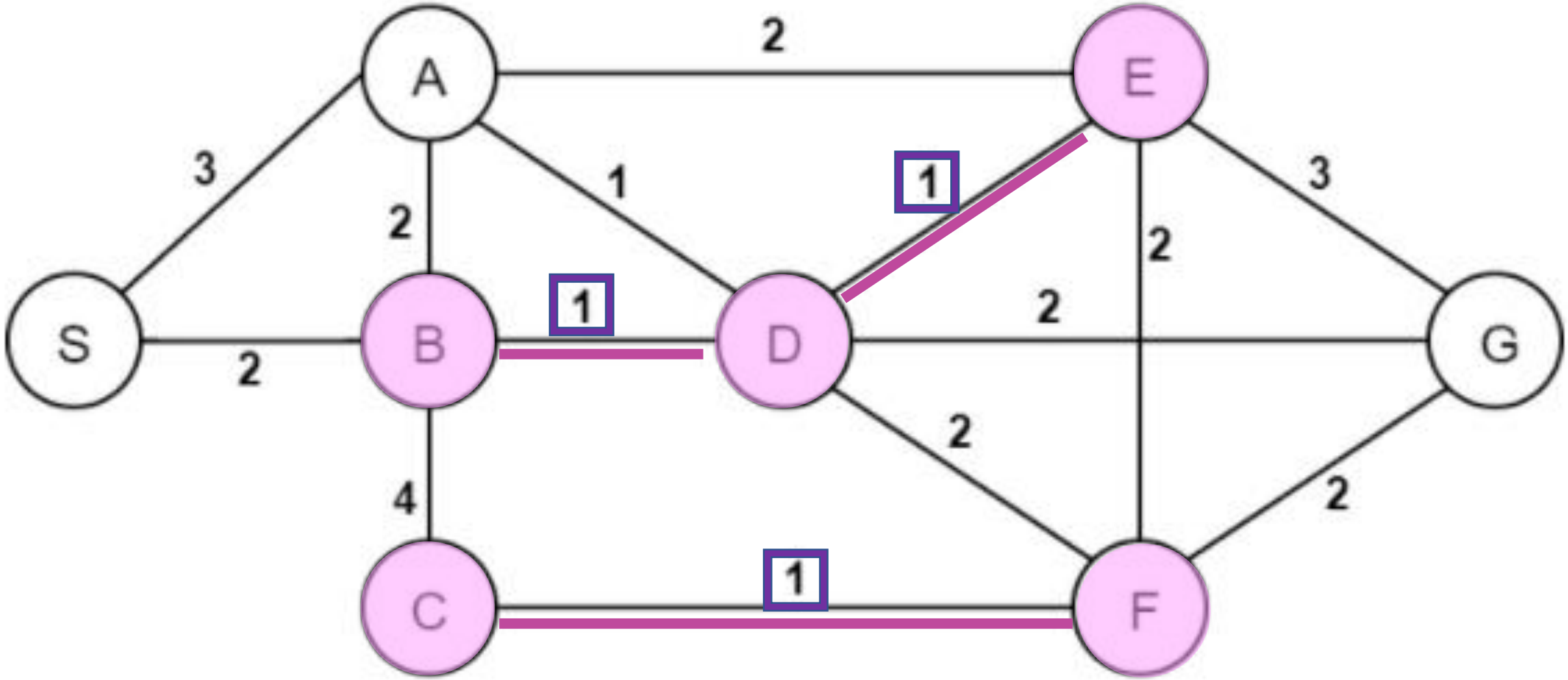

Visited ={B, D, F, C, E, }

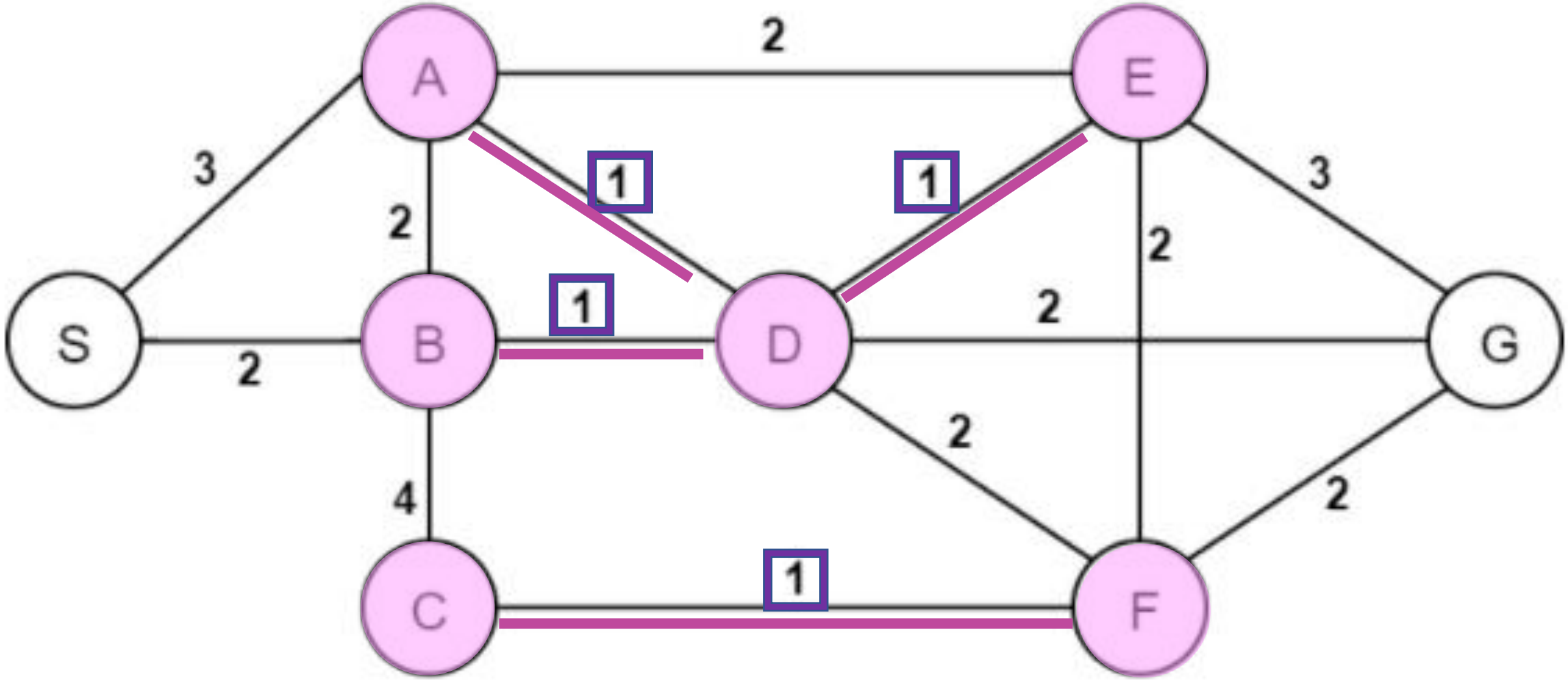

Visited ={B, D, F, C, E, A, }

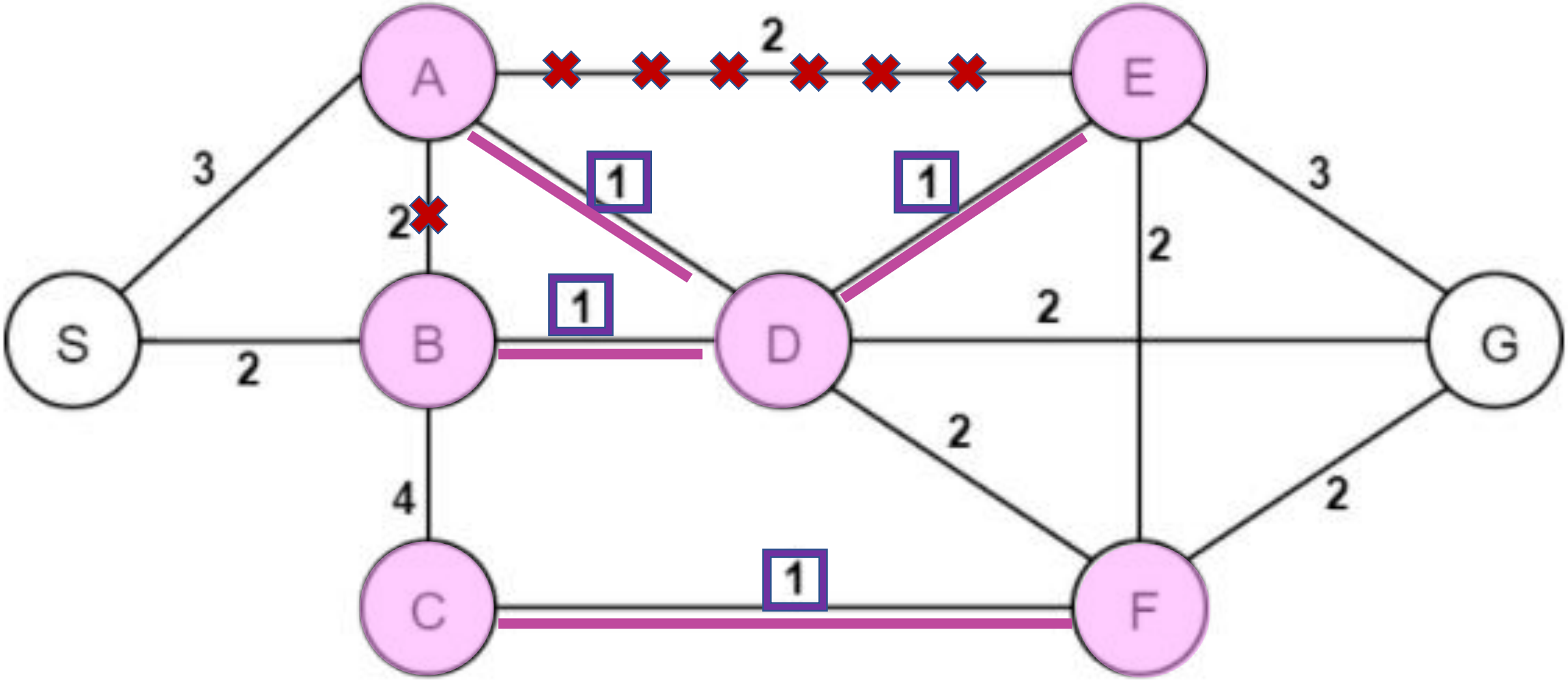

Visited ={B, D, F, C, E, A, }

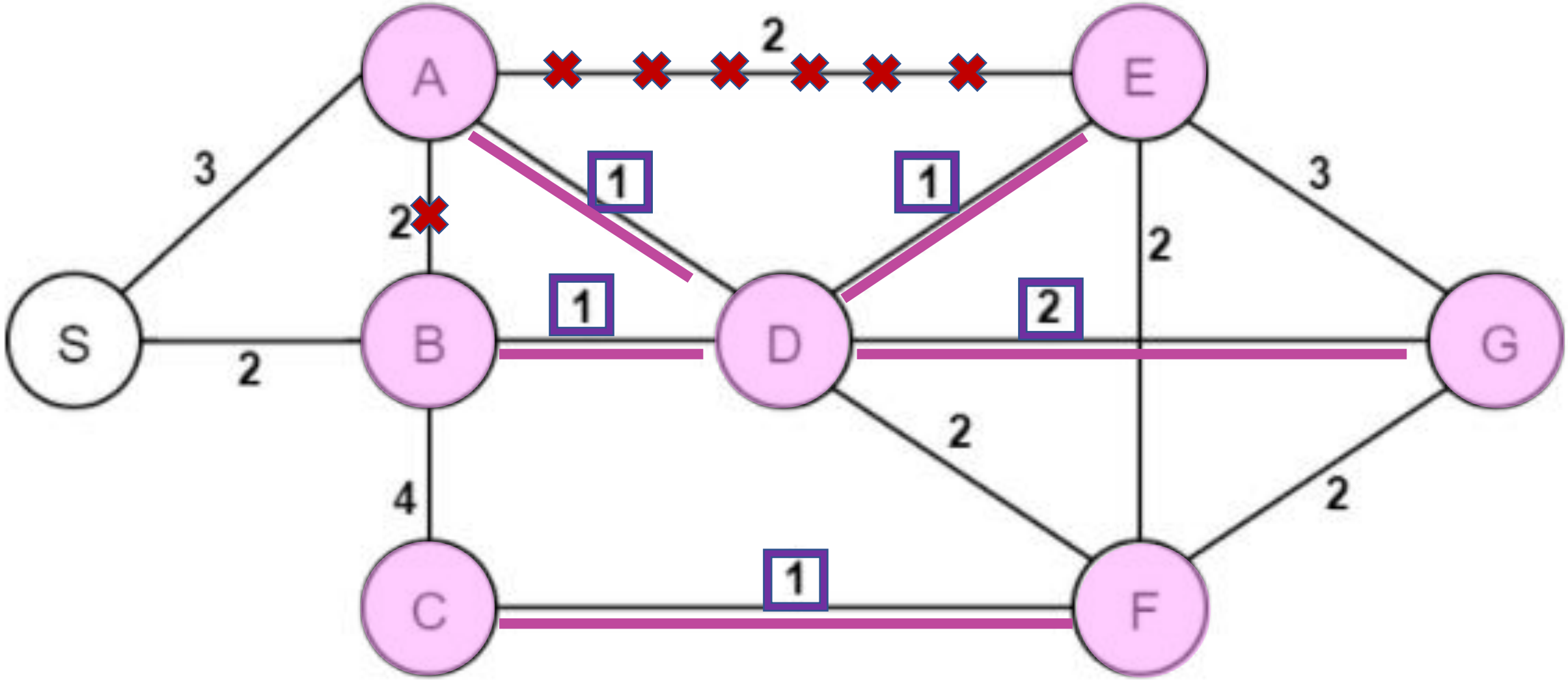

Visited ={B, D, F, C, E, A, G, }

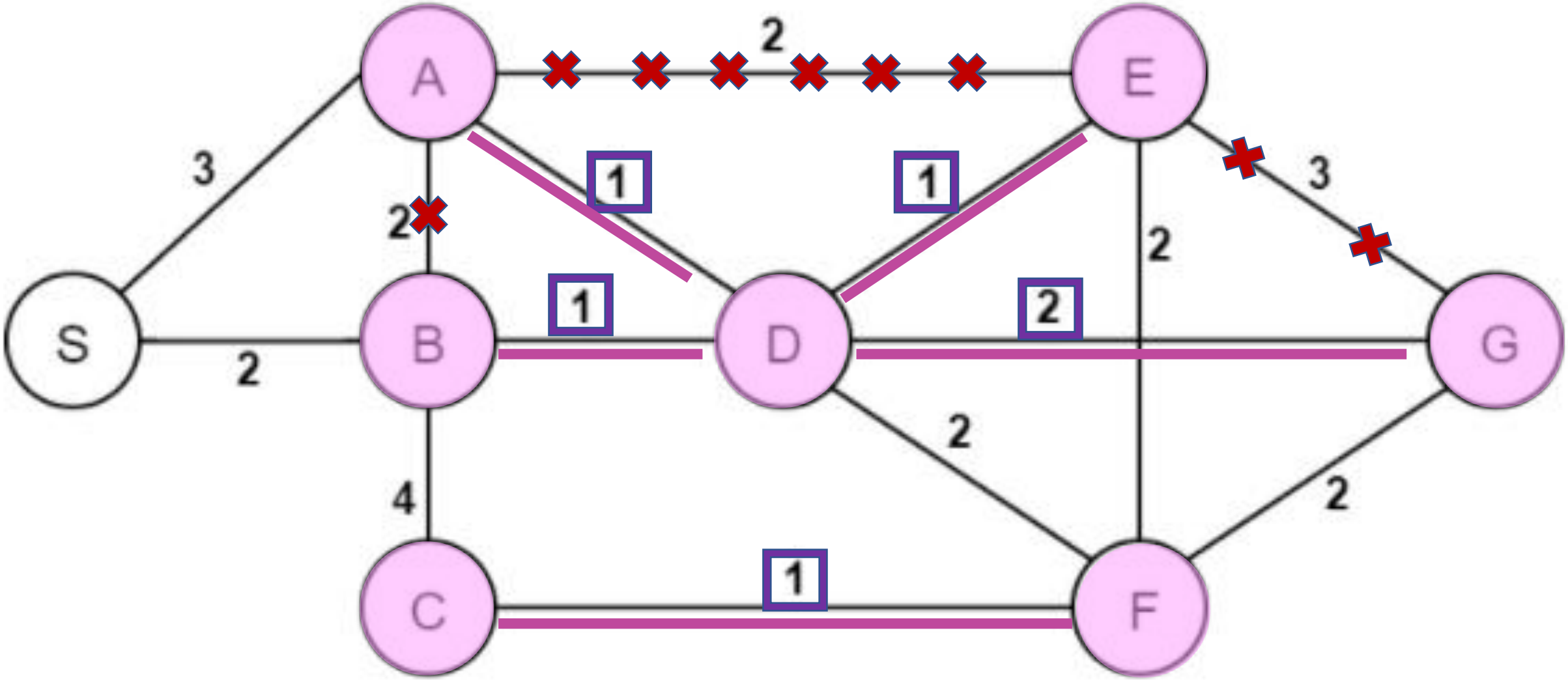

Visited ={B, D, F, C, E, A, G, }

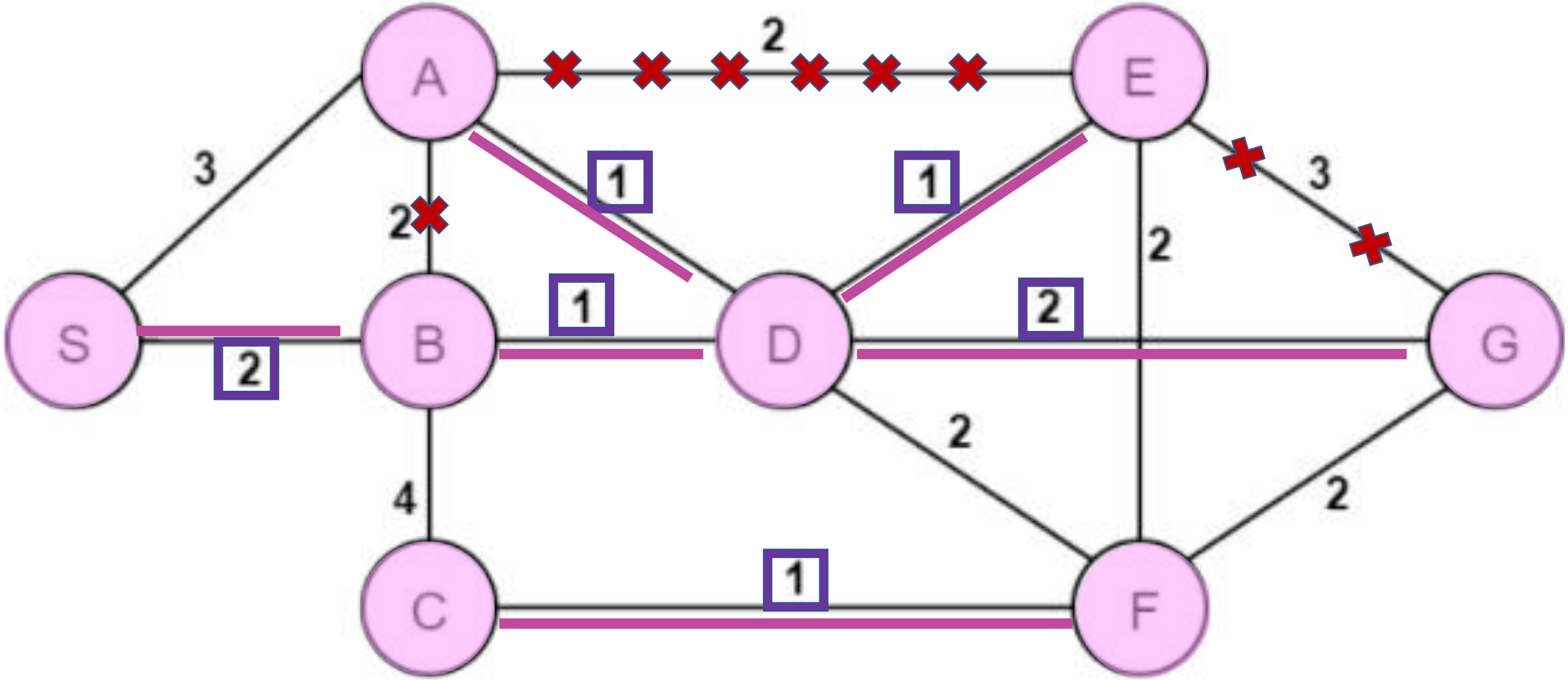

Visited ={B, D, F, C, E, A, G, S, }

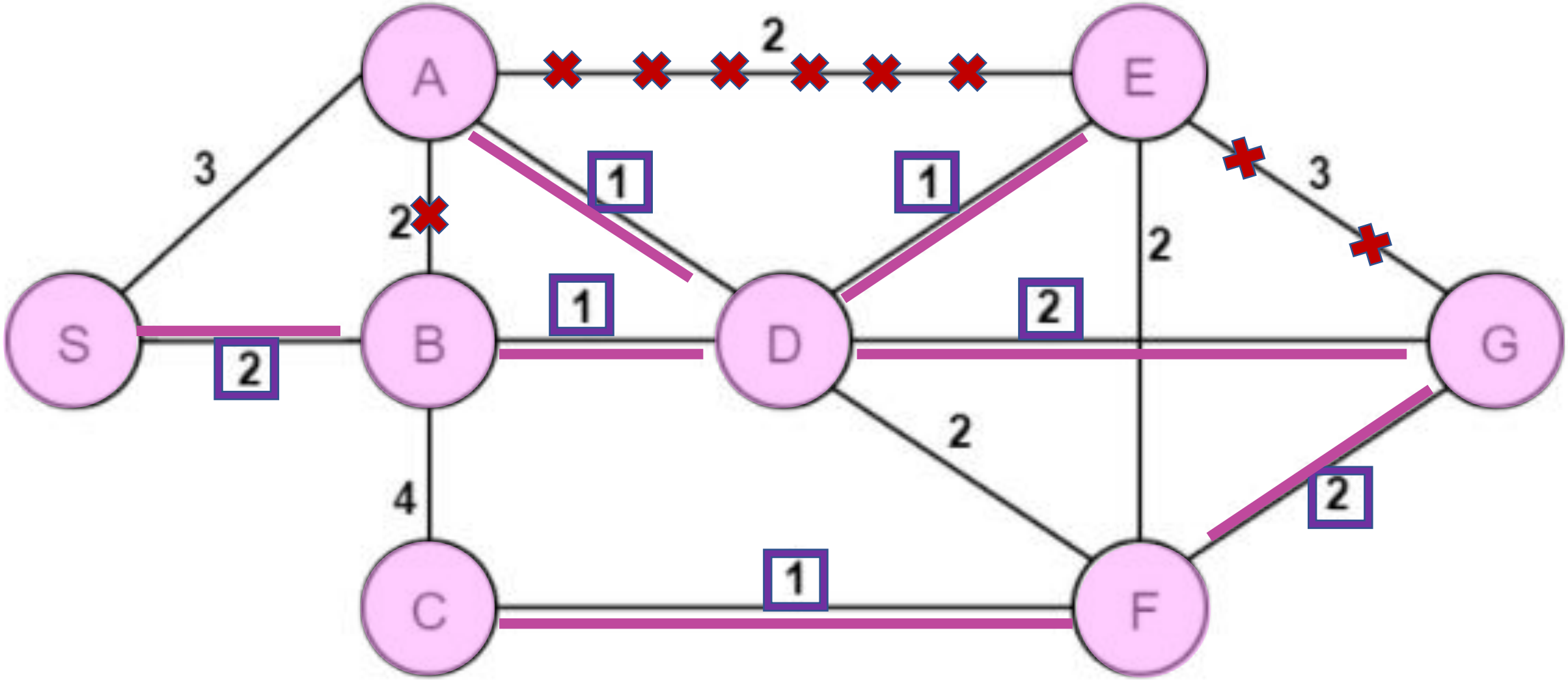

Visited ={B, D, F, C, E, A, G, S, }

QUESTION #4
Breadth-first Traversal

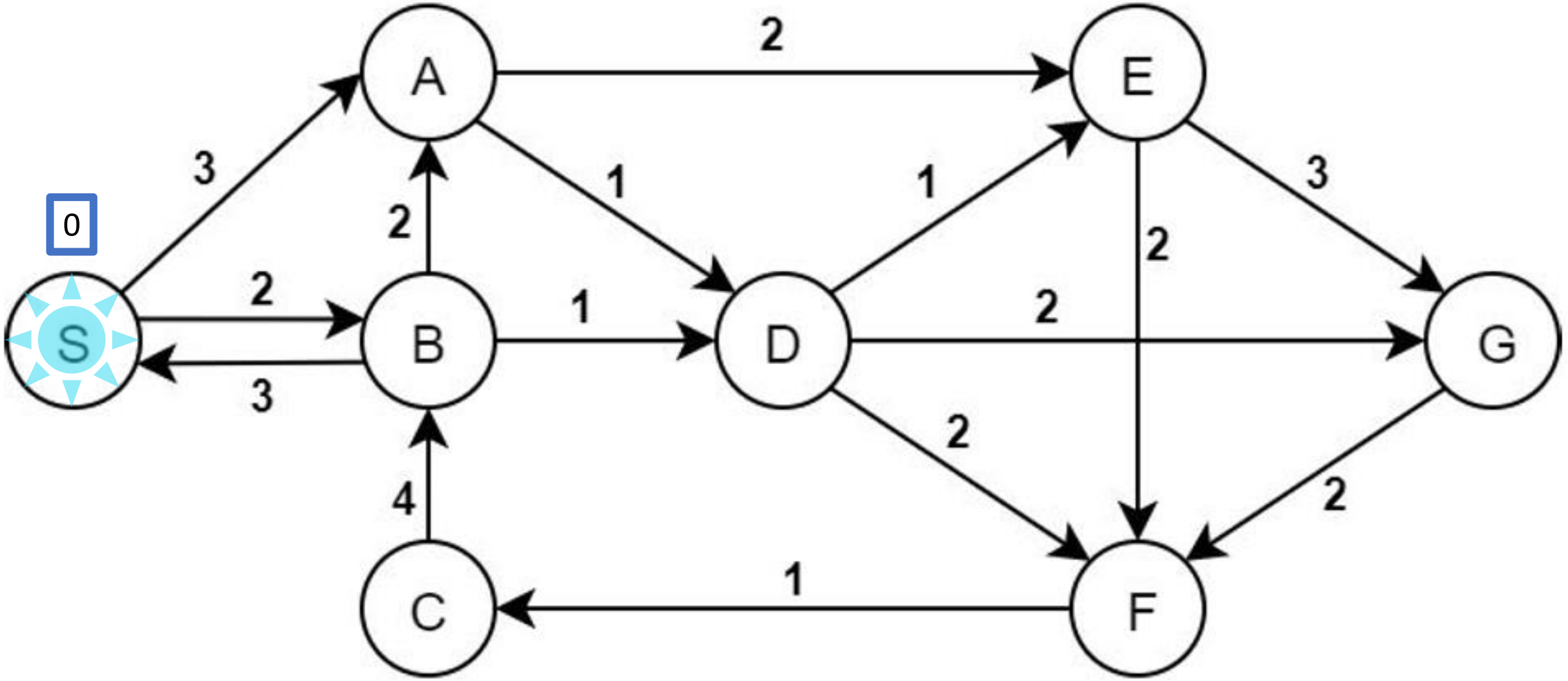
0
S
A
B
C
D
E
F
G
3
2
2
3
2
1
1
1
2
2
2
4
1
3
2

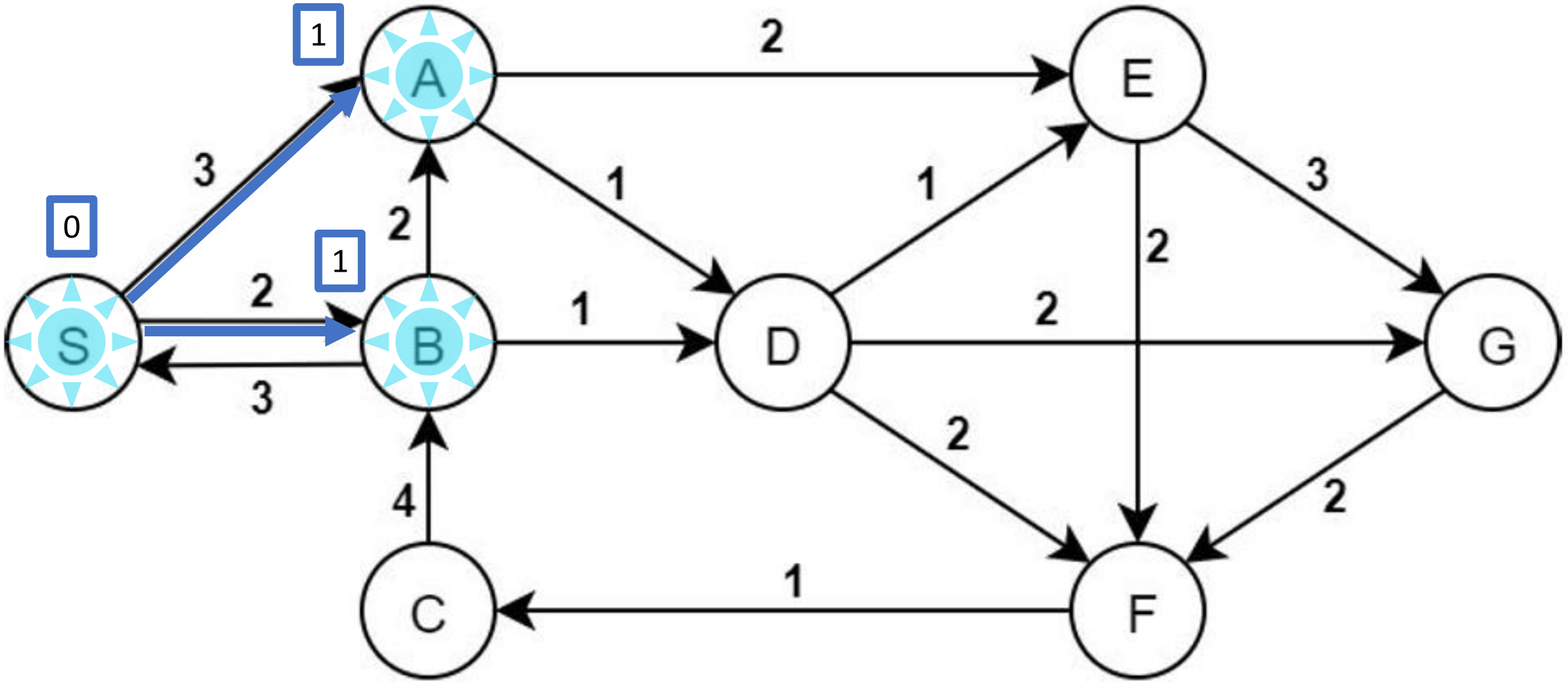

1
A
2
E
3
1
1
3
0
2
2
1
2
S
B
1
D
2
G
3
2
4
2
C
1
F

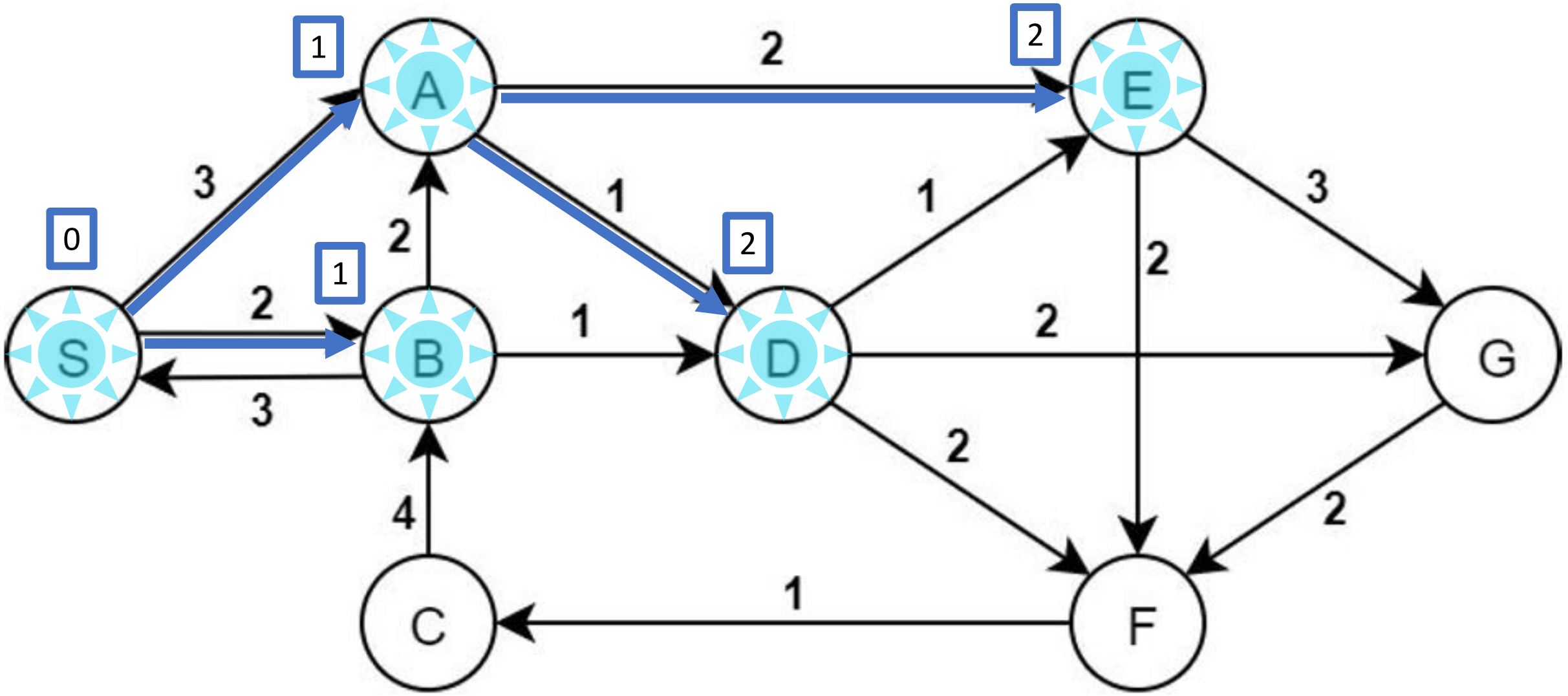

0
1
1
2
2
S
A
B
C
D
E
F
G
3
2
3
2
1
1
2
1
1
2
2
3
2
2
4
1

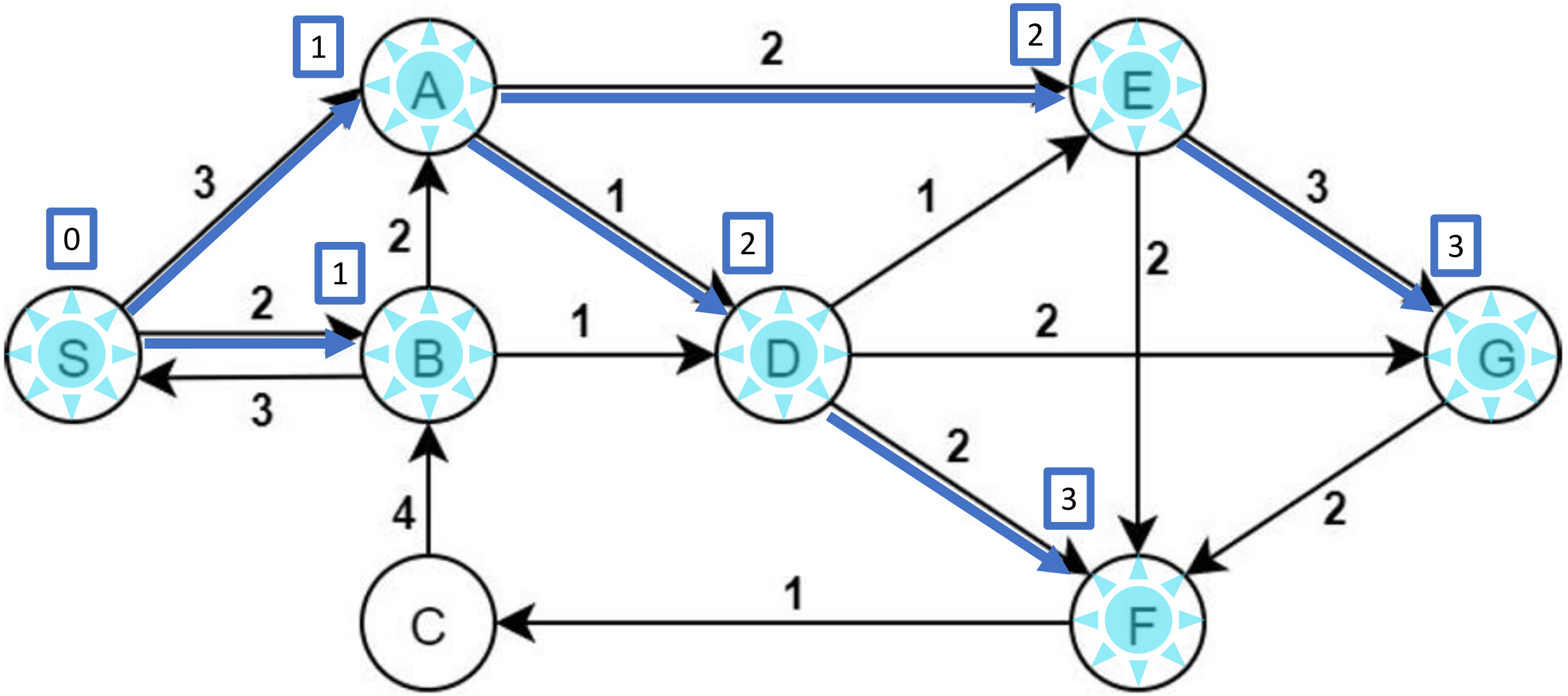

0
1
2
3
S
A
B
C
D
E
F
G
3
2
1
2
1
2
1
2
3
2
3
4
2
1
2

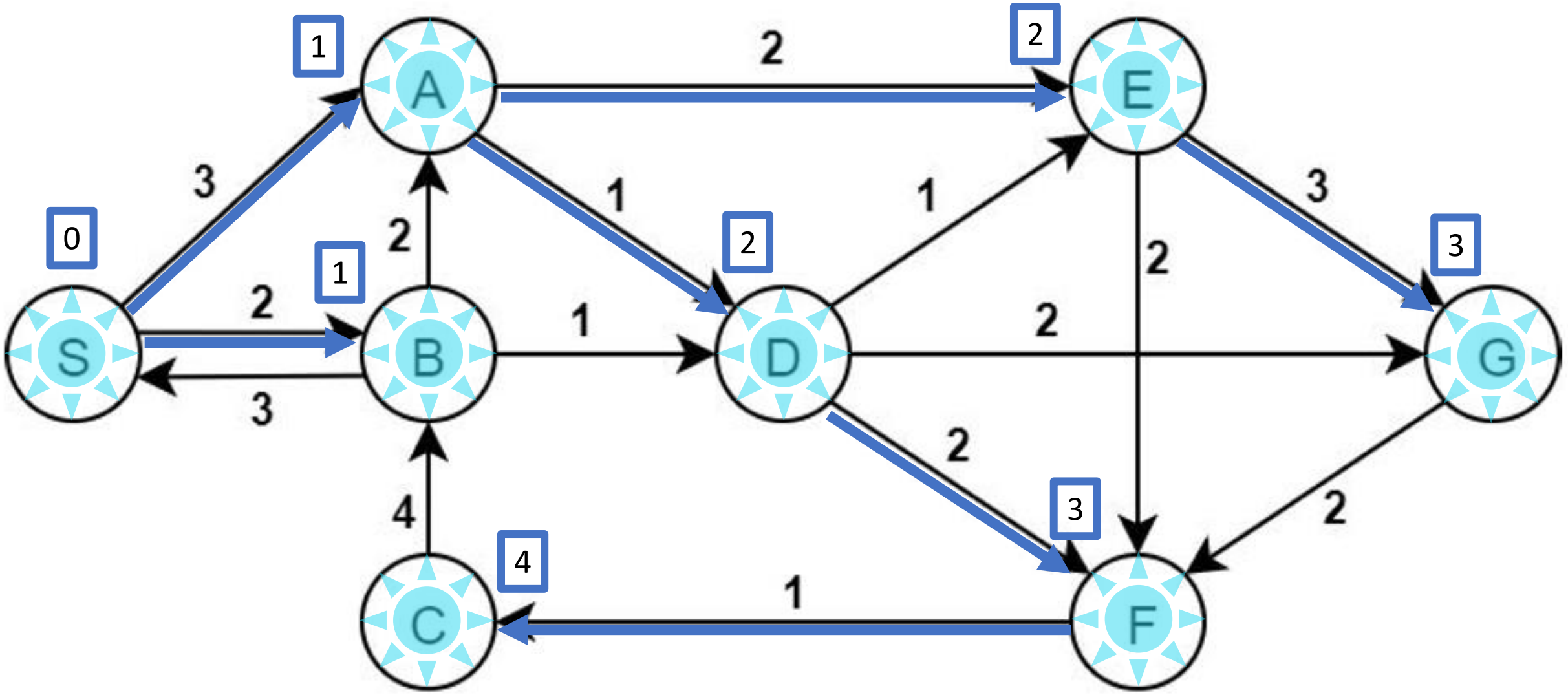

S
A
B
C
D
E
F
G
0
1
1
2
2
3
3
4
3
2
2
1
1
2
2
3
2
2
4
1

QUESTION #5
Depth-first Traversal

A

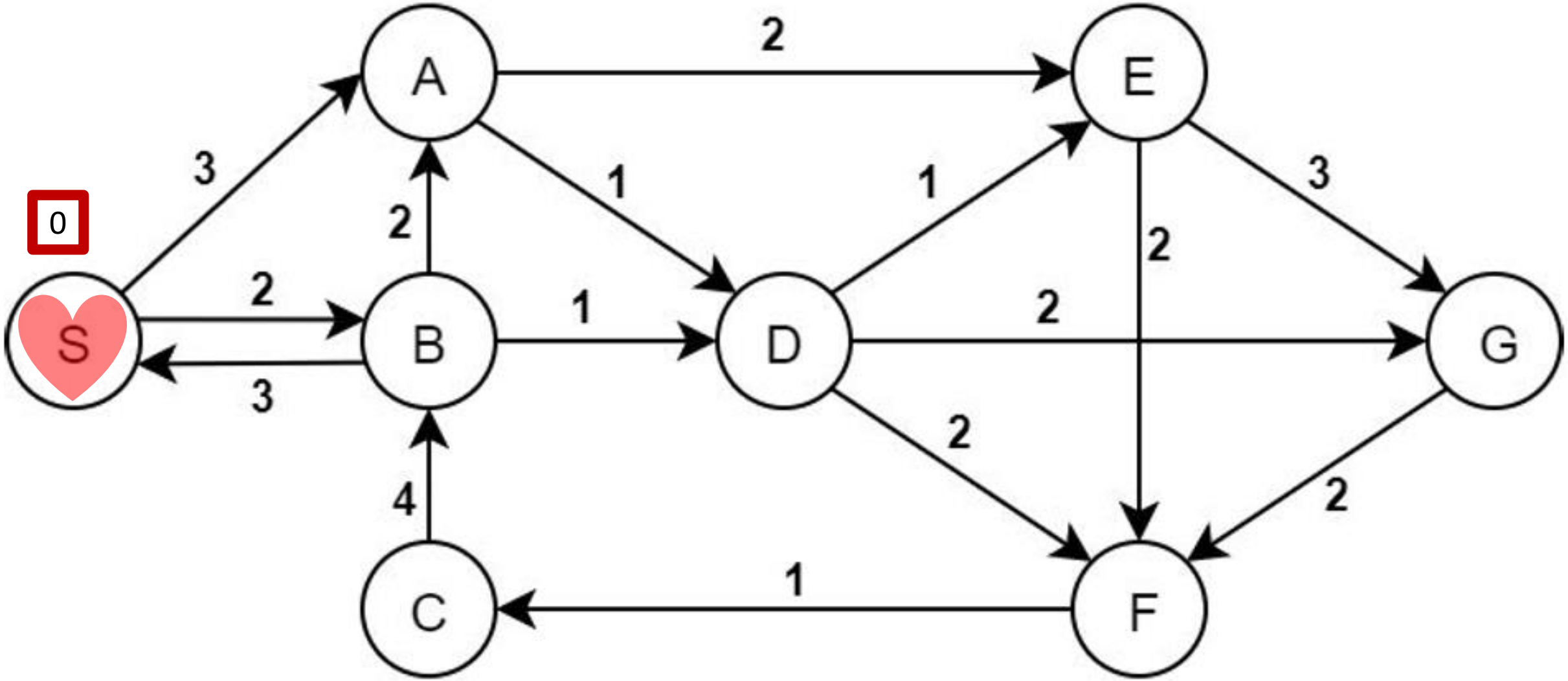

Visited ={ }

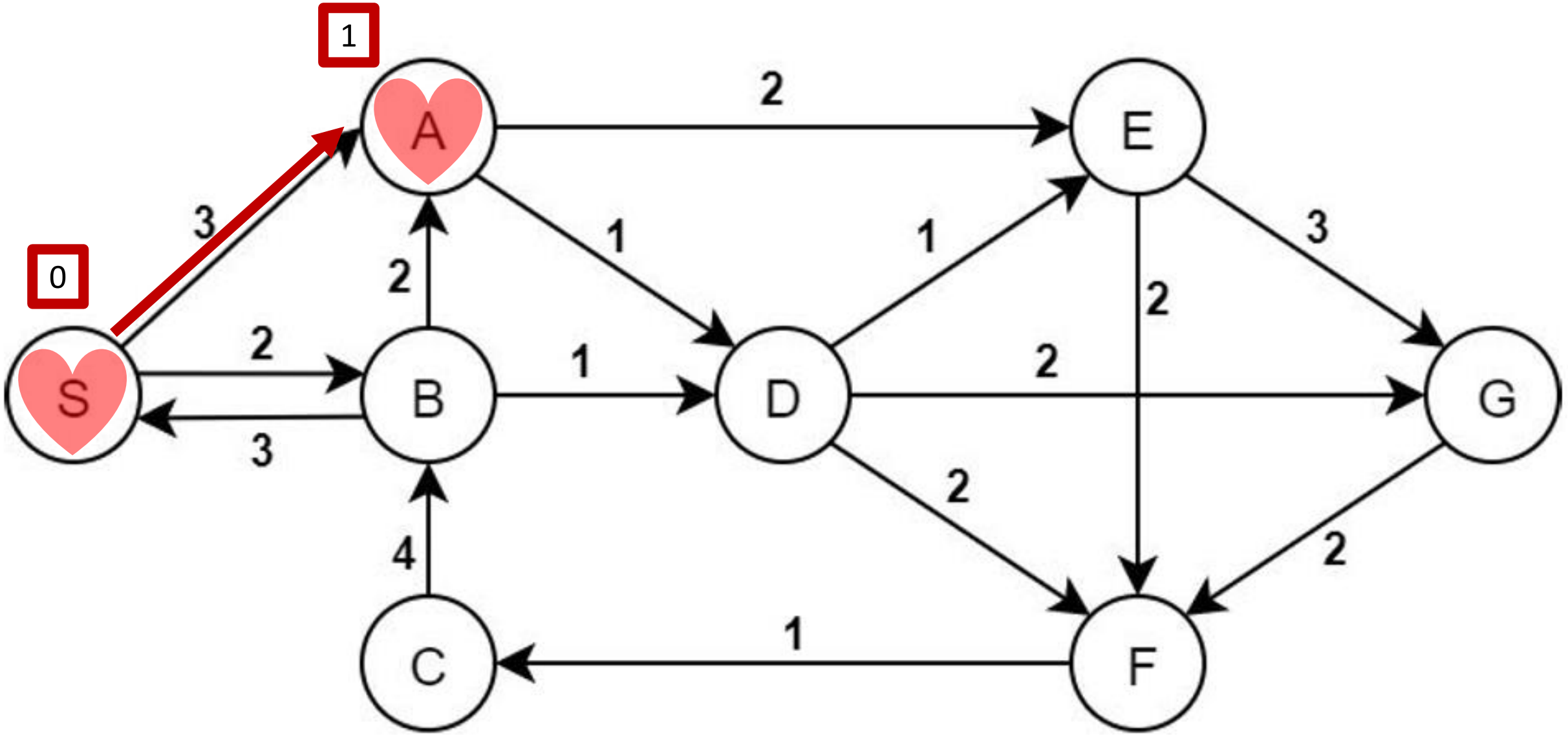

Visited ={ }

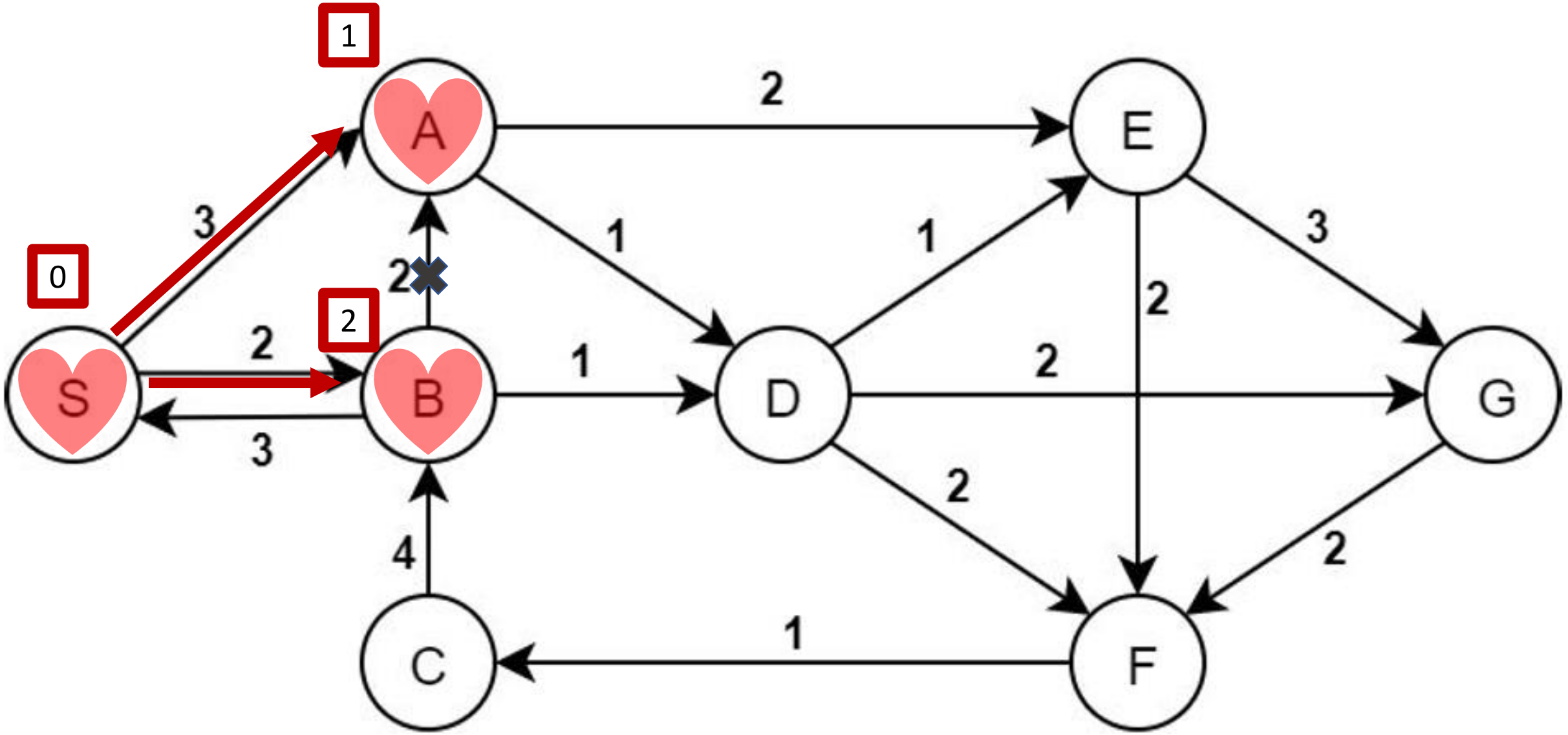

Visited ={ }

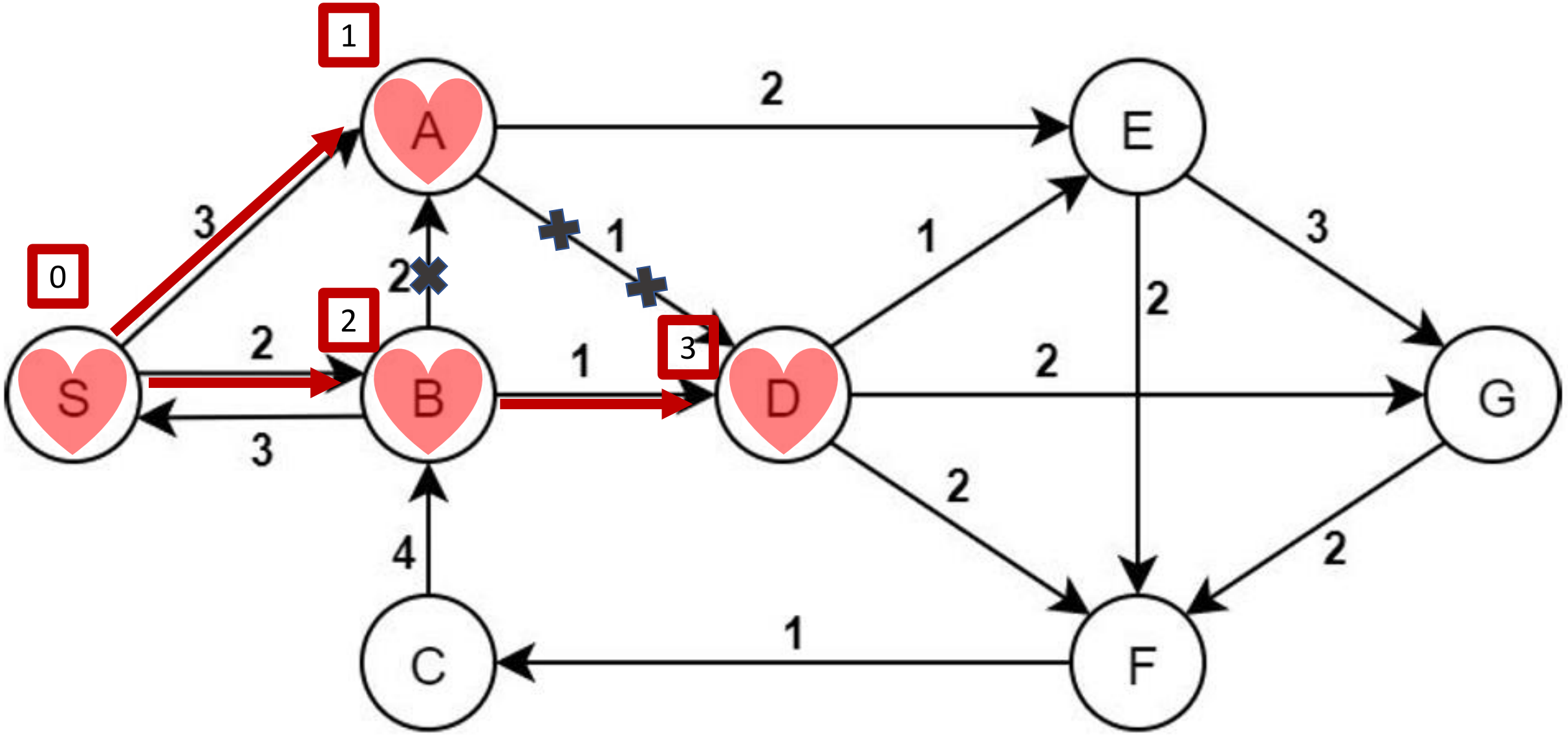

Visited ={ }

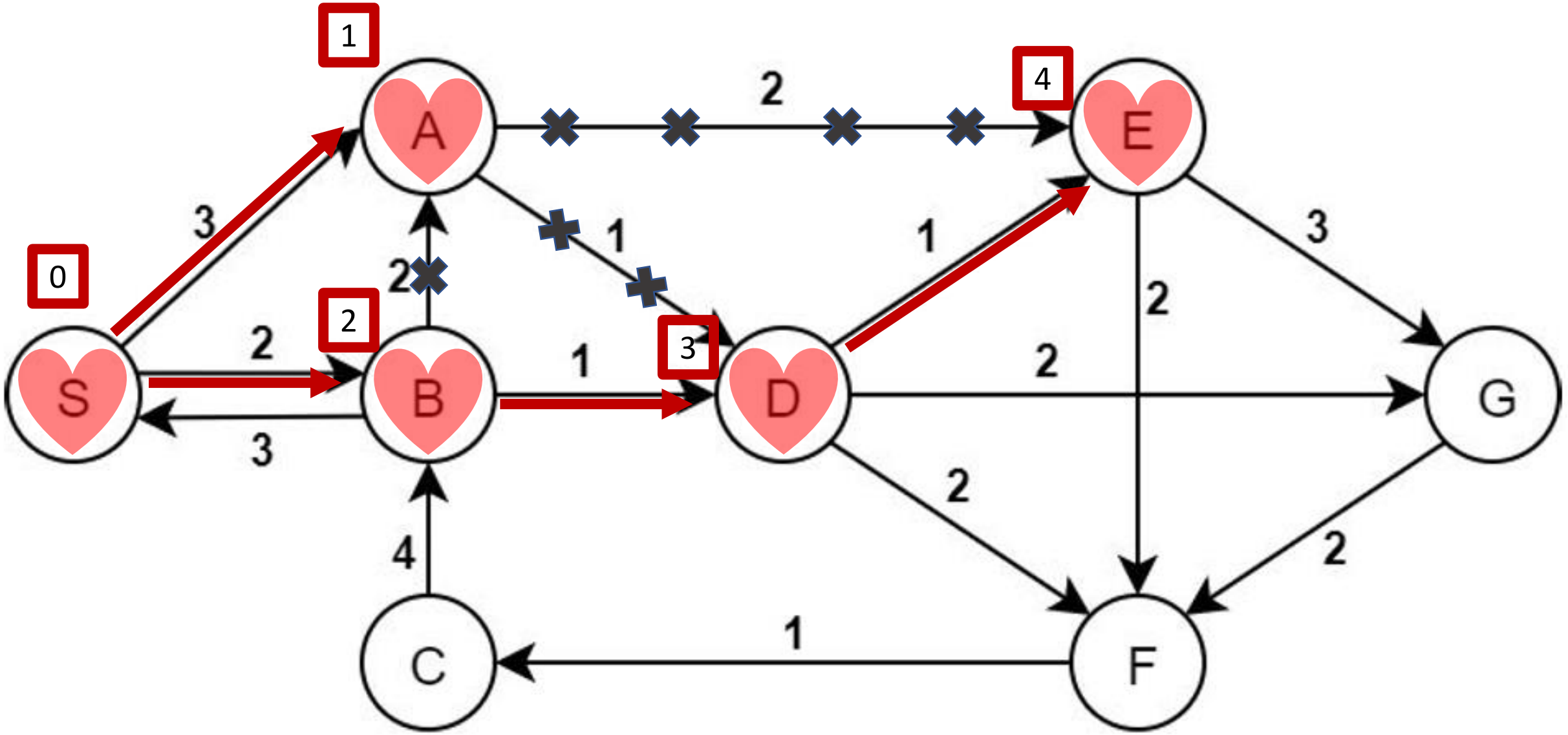

Visited ={ }

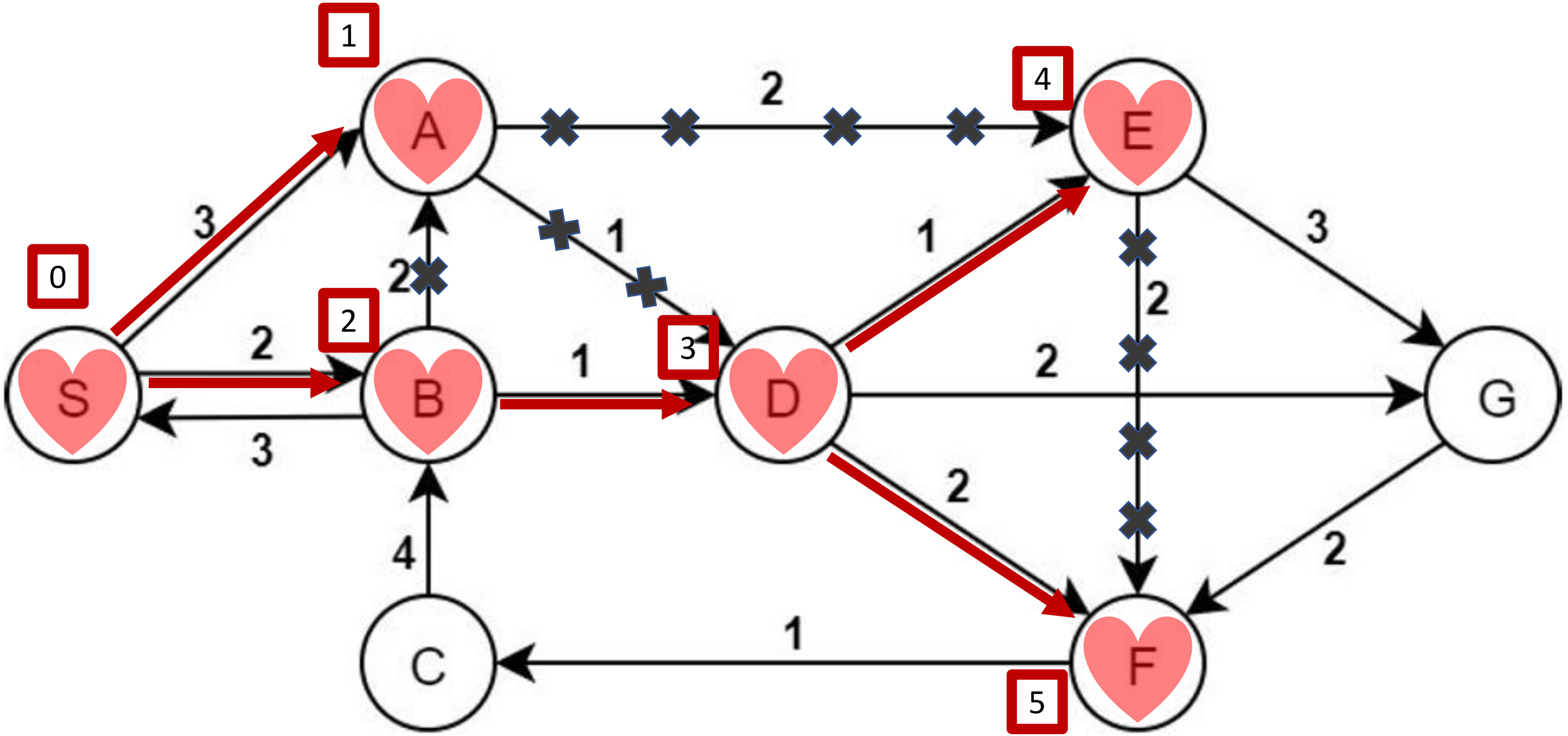

Visited ={ }

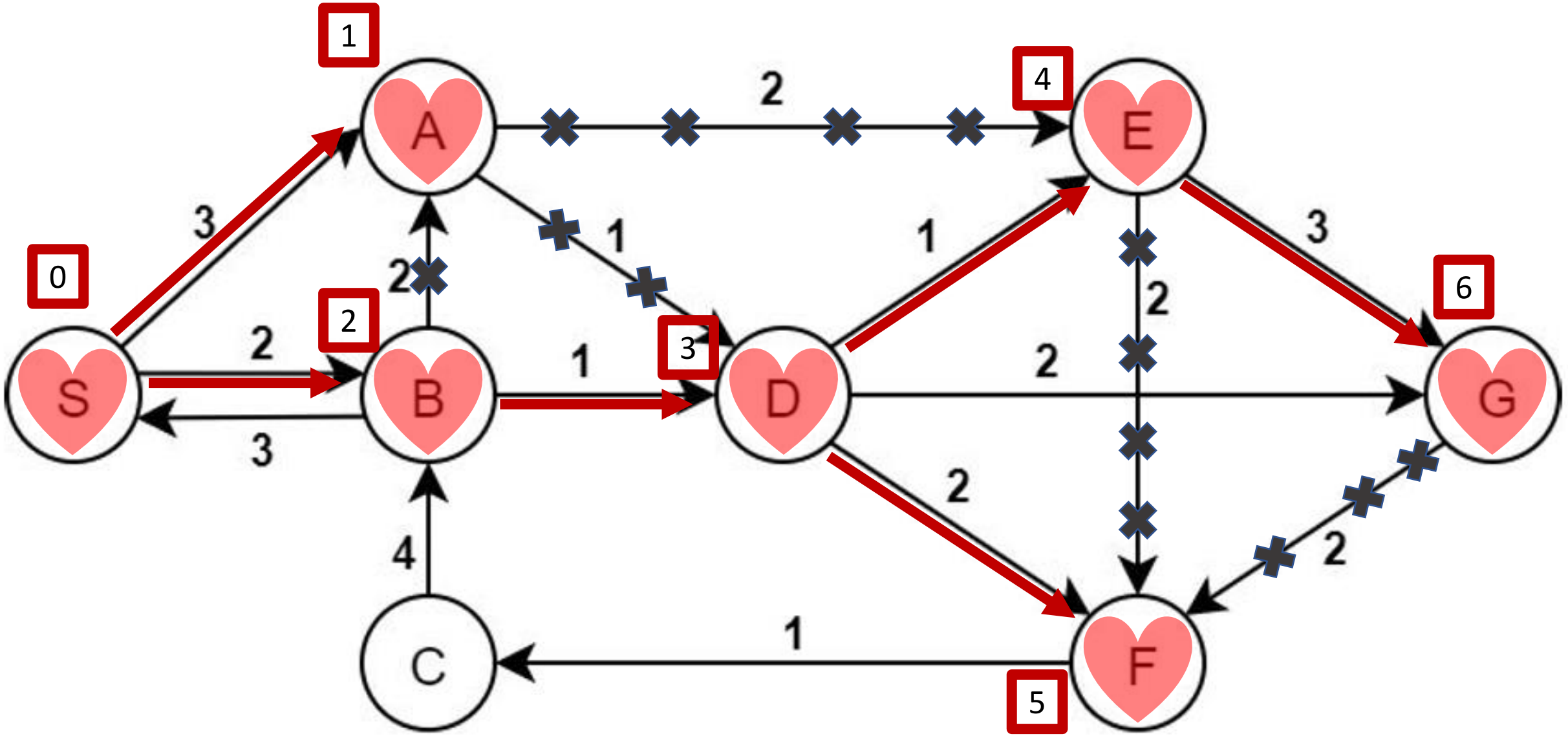

Visited ={ }

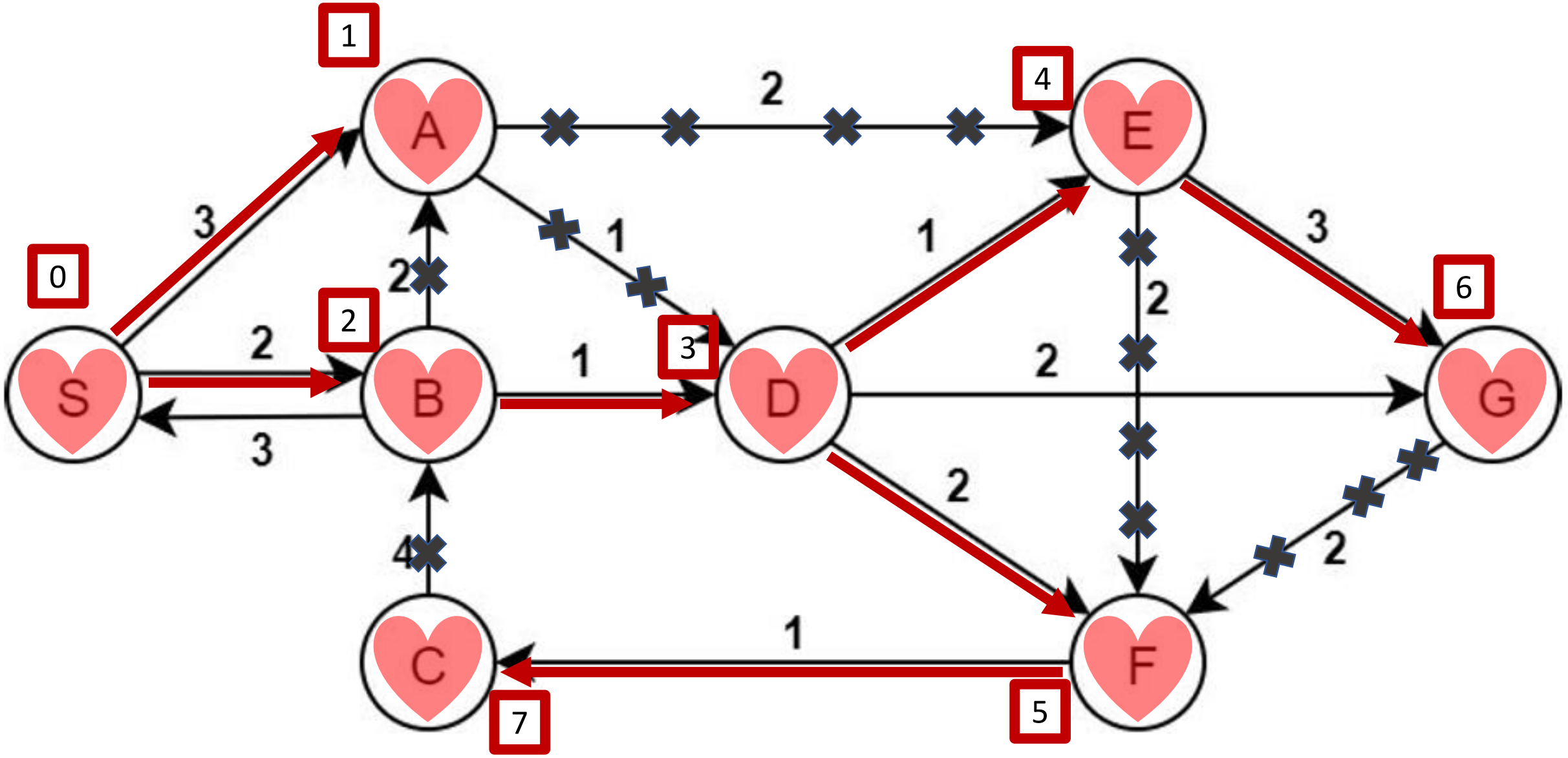

Visited ={ }

B

b) Give the post-order numbers for all the nodes. 1

C-F-G-E-D-B-A-S

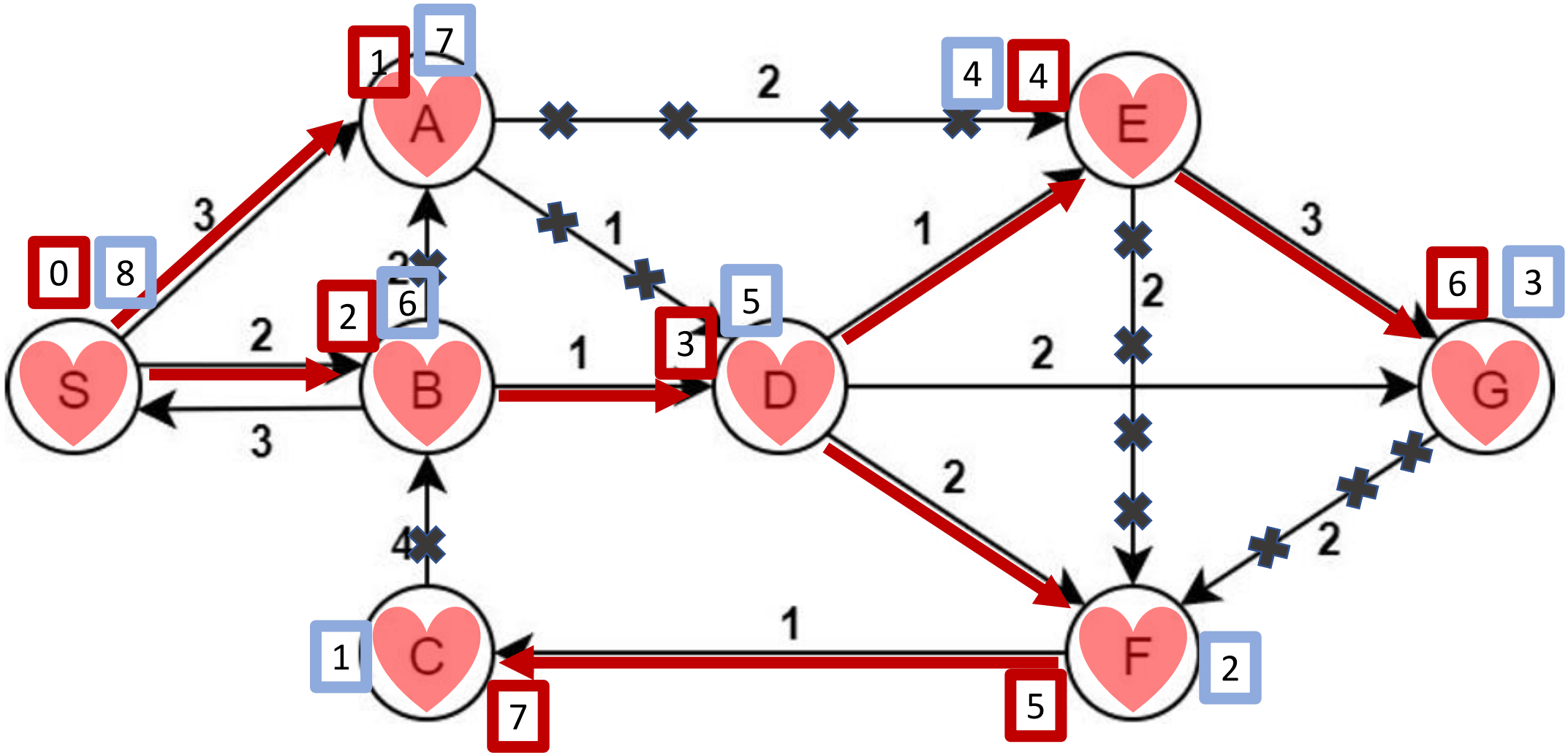

Visited ={ }

C

c) Give the pre-order numbers for all the nodes.

S-B-D-F-C-E-G-A

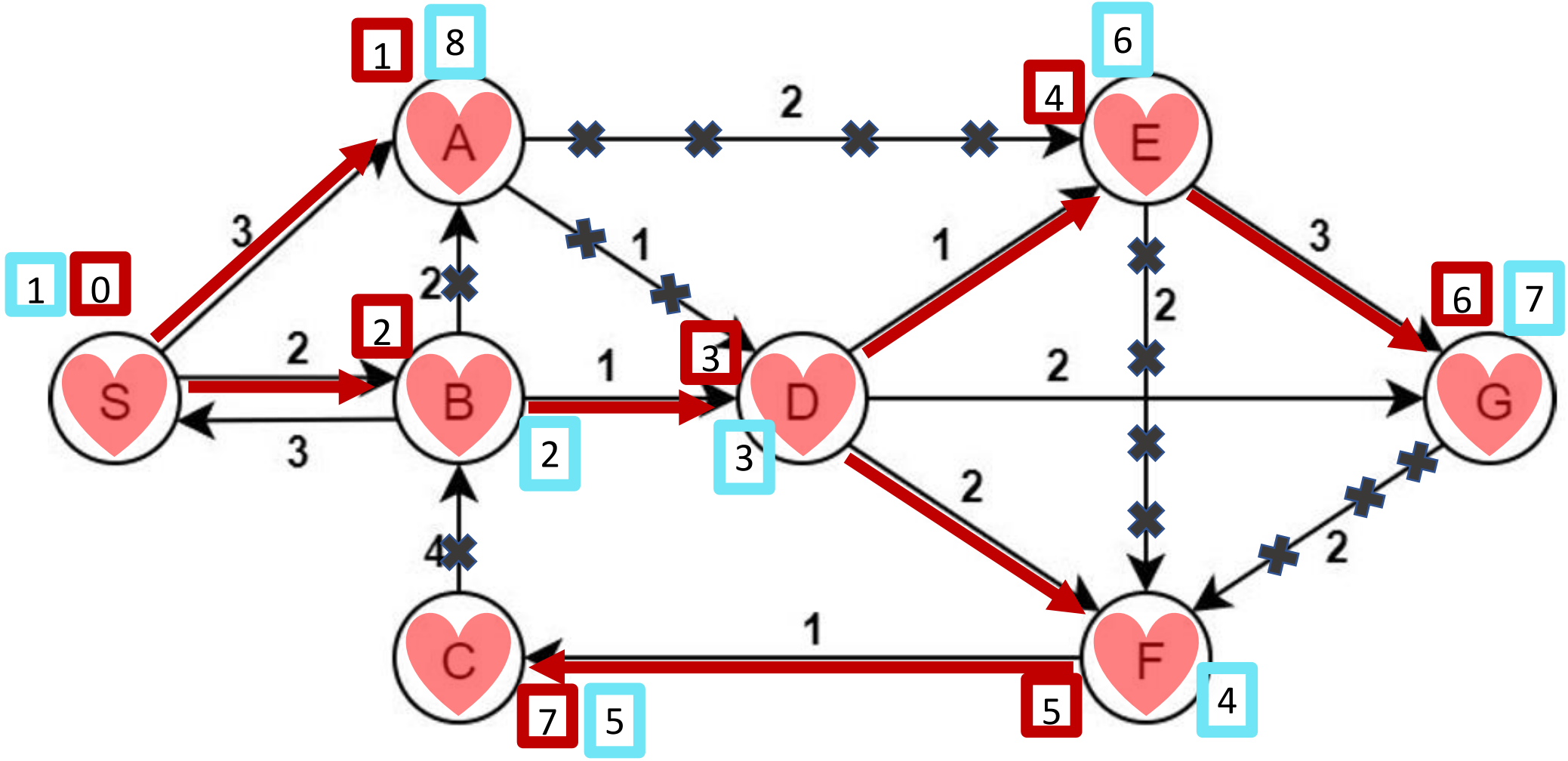

Visited ={ }

D

d) List the tree arcs, cross arcs, forward arcs, and backward arcs.

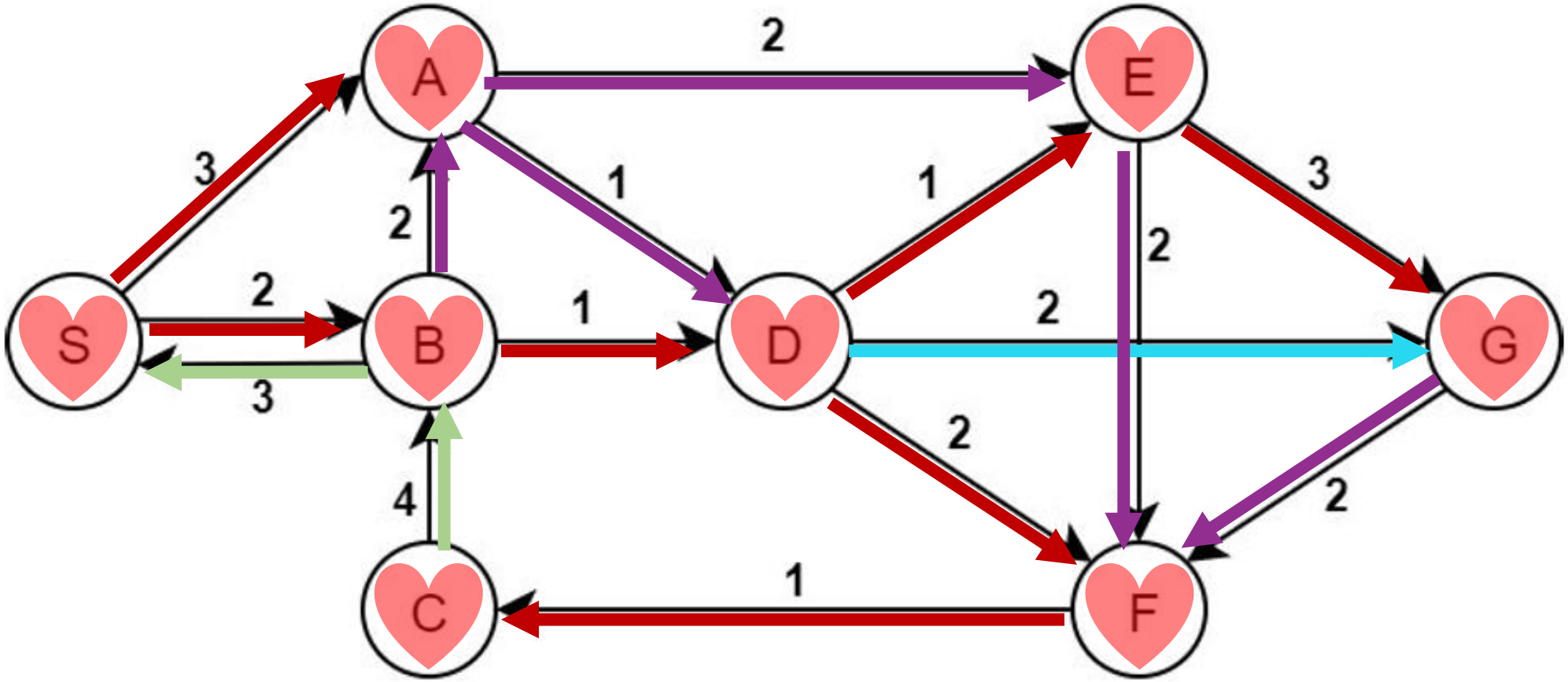

Visited ={ }

QUESTION #6
Topological Ordering

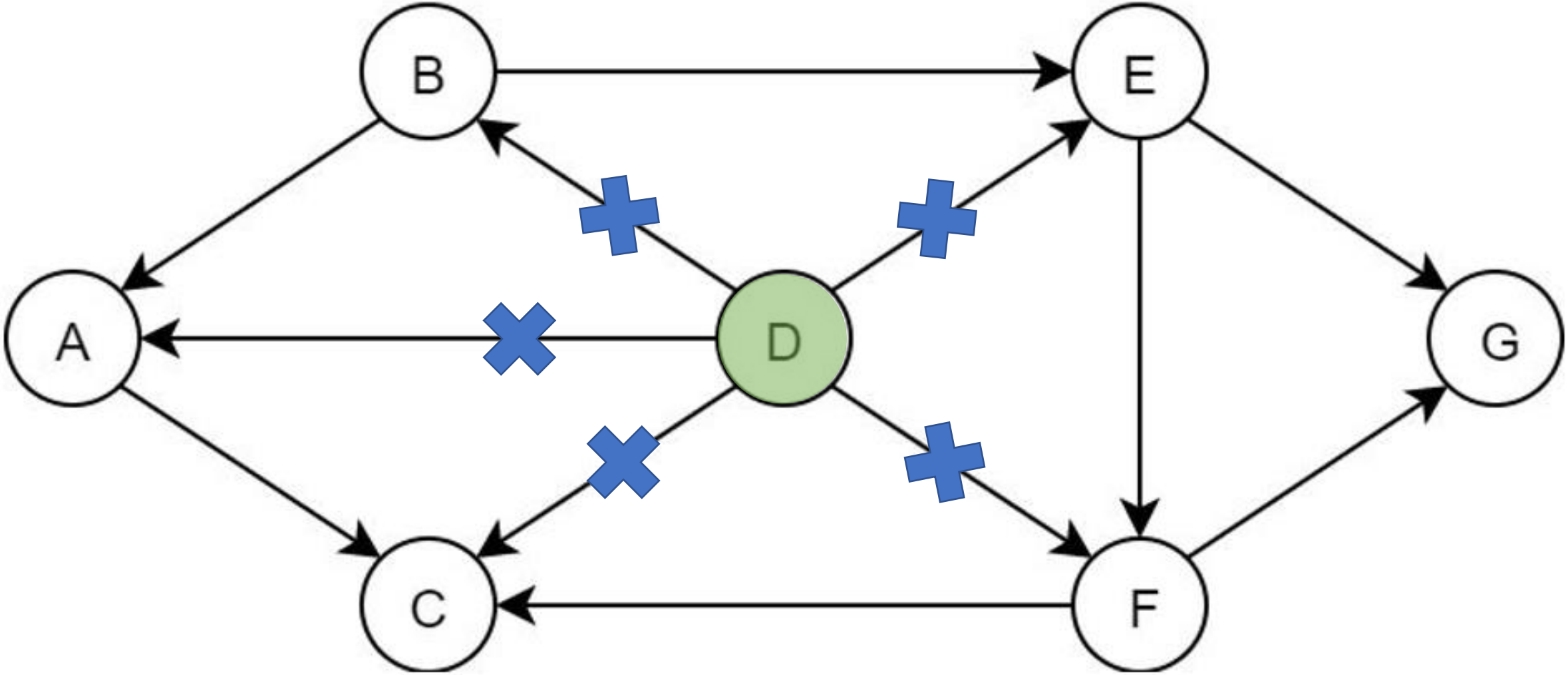

Sorted = {D, }

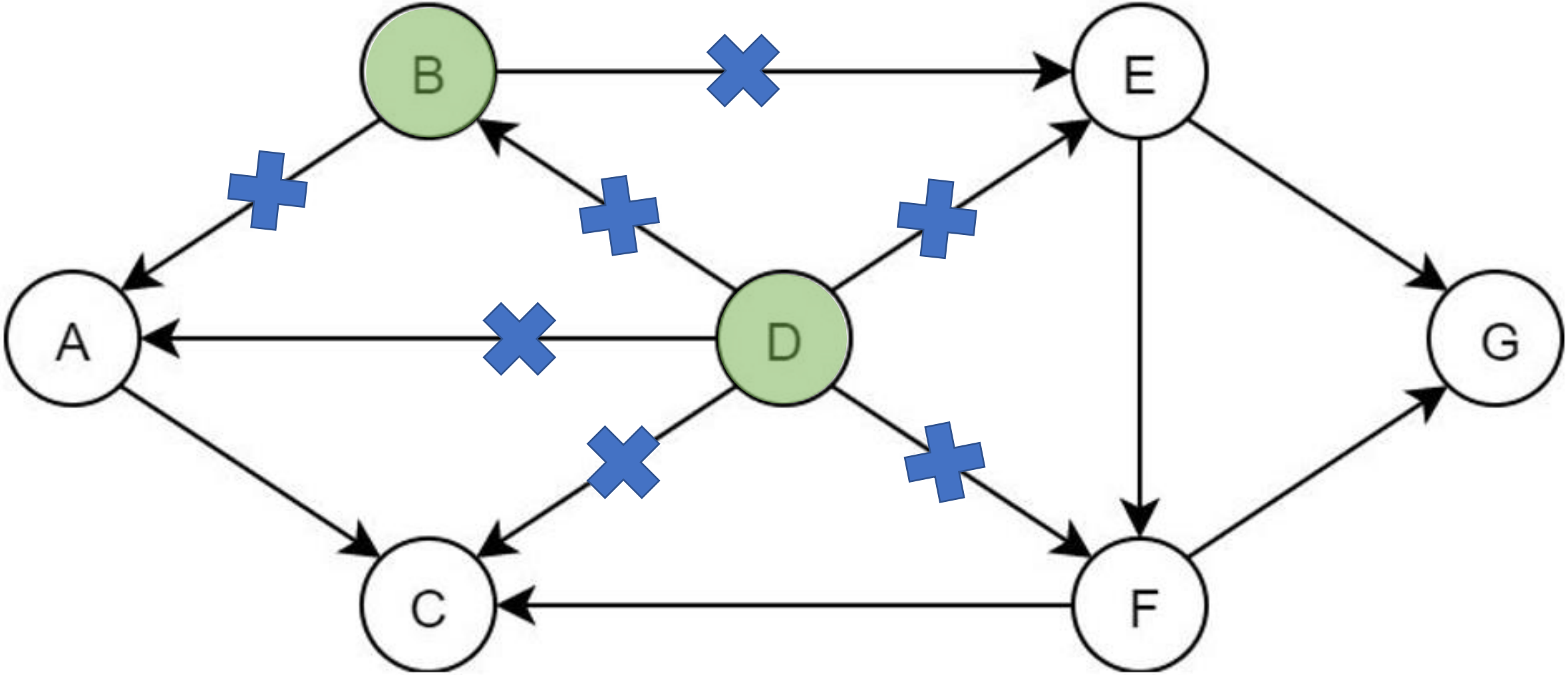

Sorted = {D, B, }

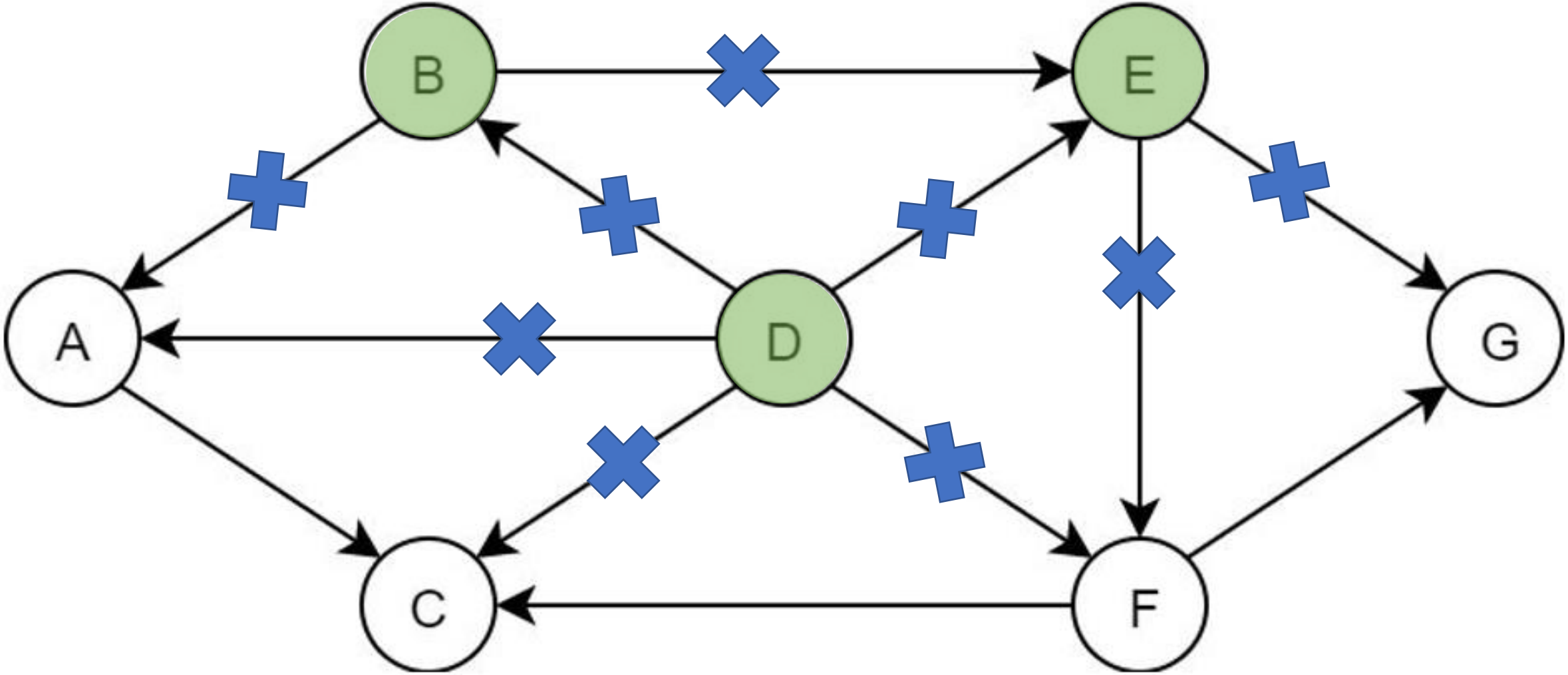

Sorted = {D, B, E, }

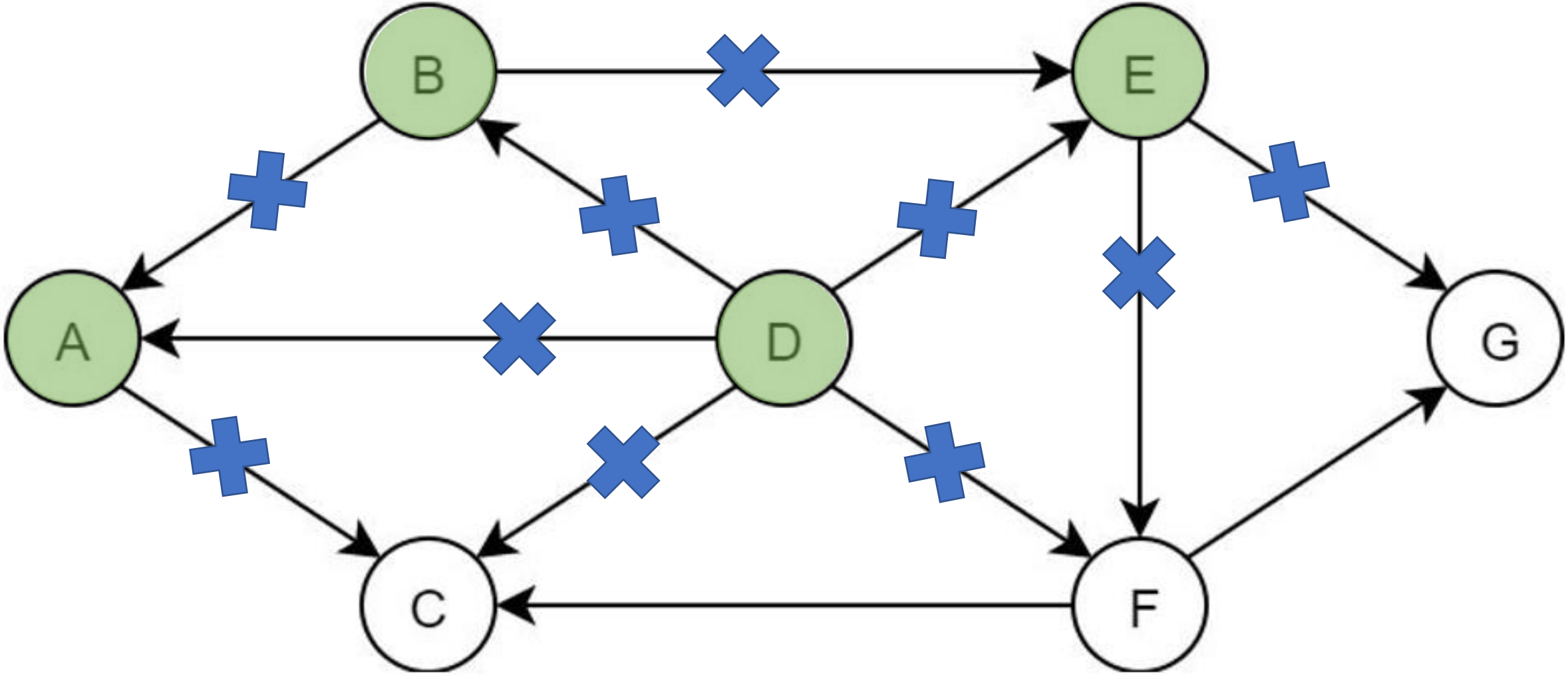

Sorted = {D, B, E, A, }

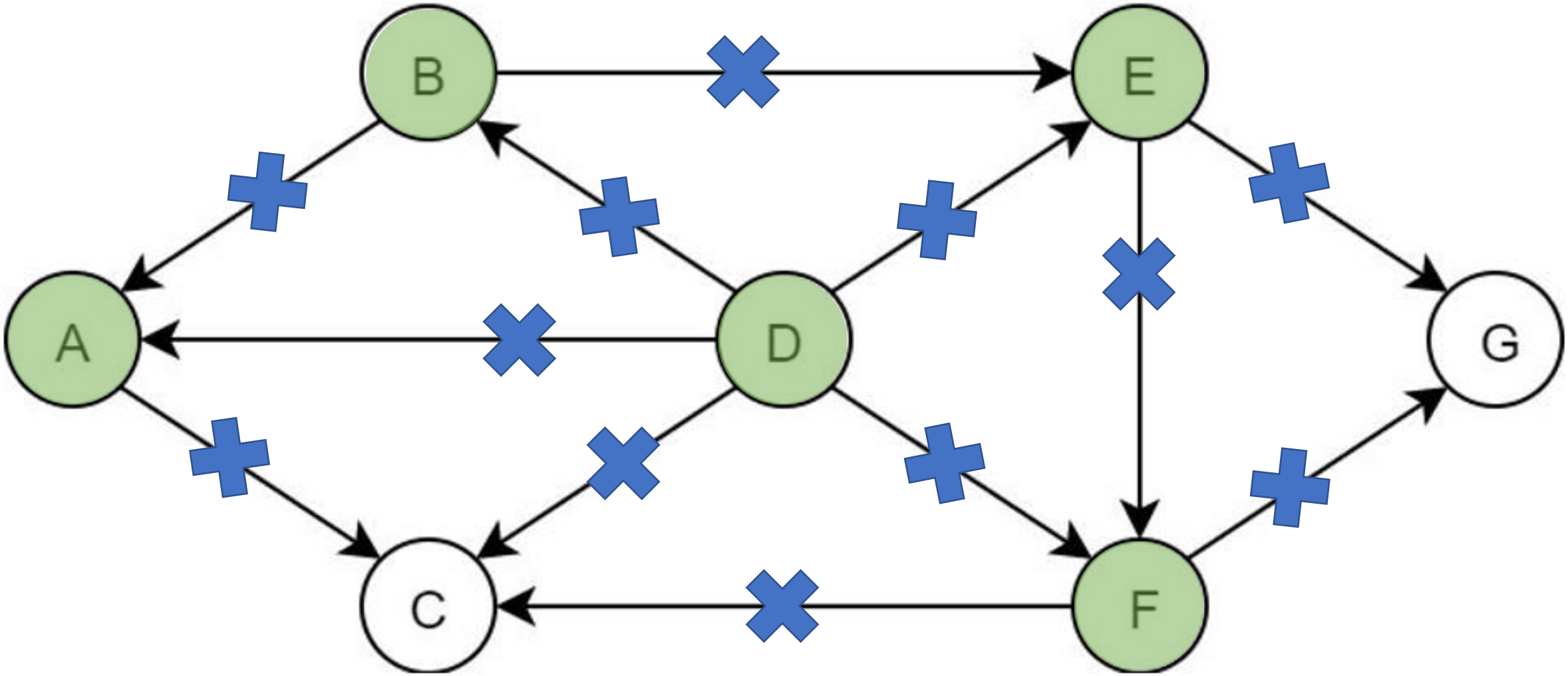

Sorted = {D, B, E, A, F, }

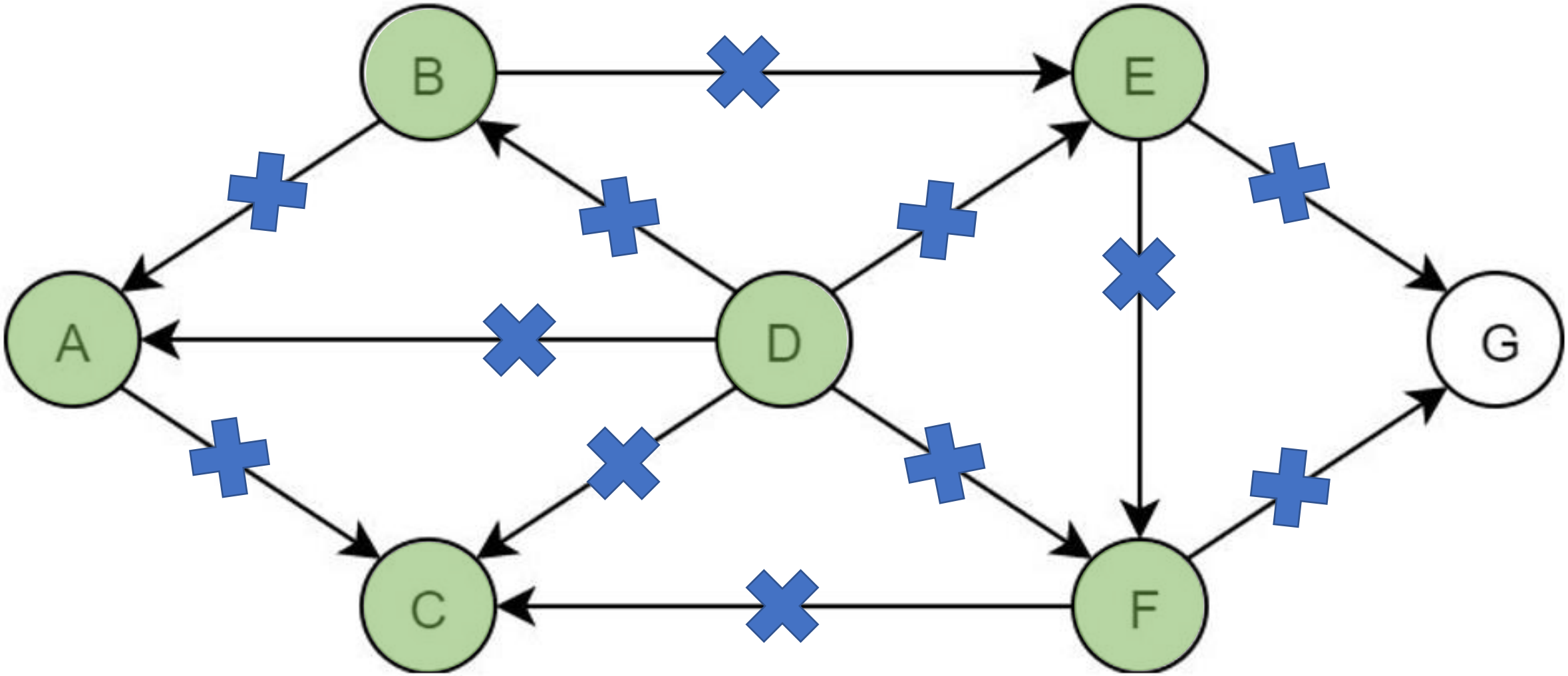

Sorted = {D, B, E, A, F, C, }

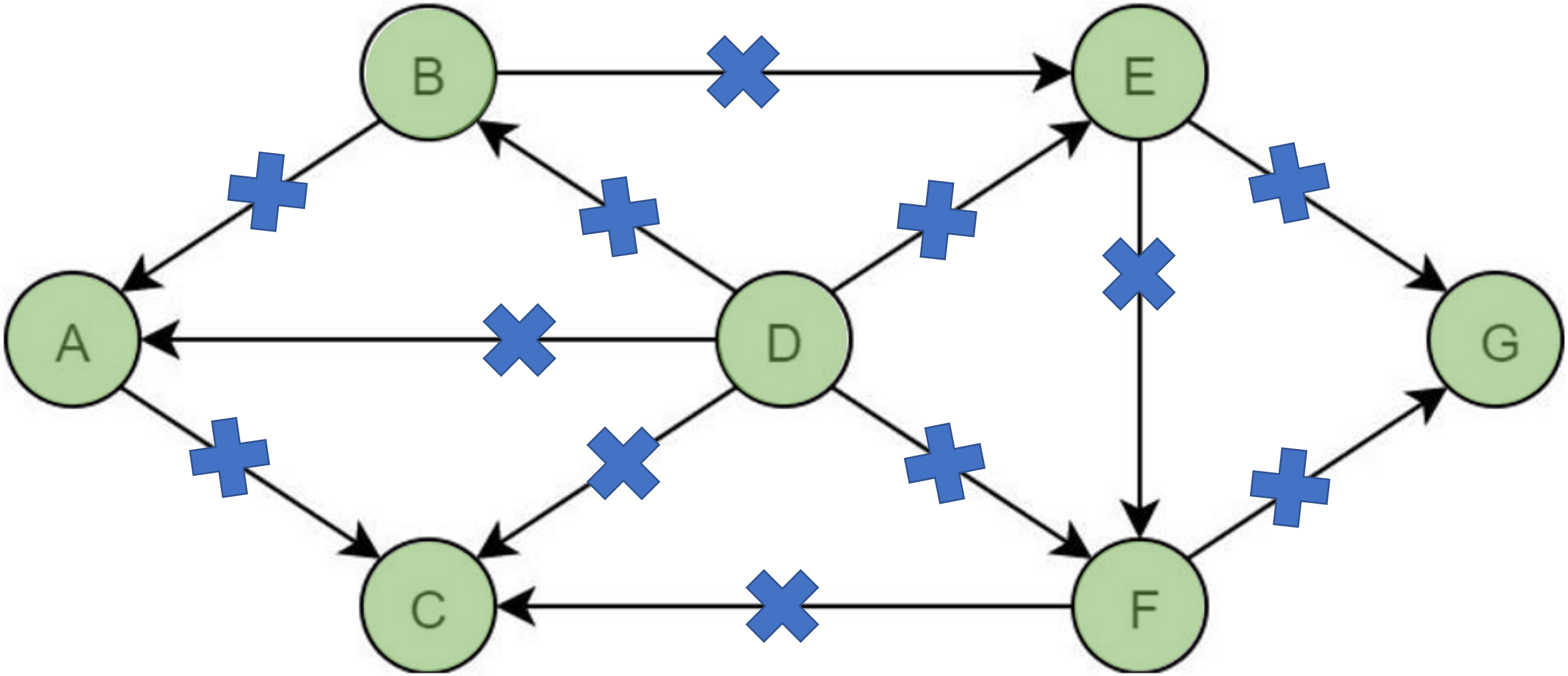

Sorted = {D, B, E, A, F, C, G}