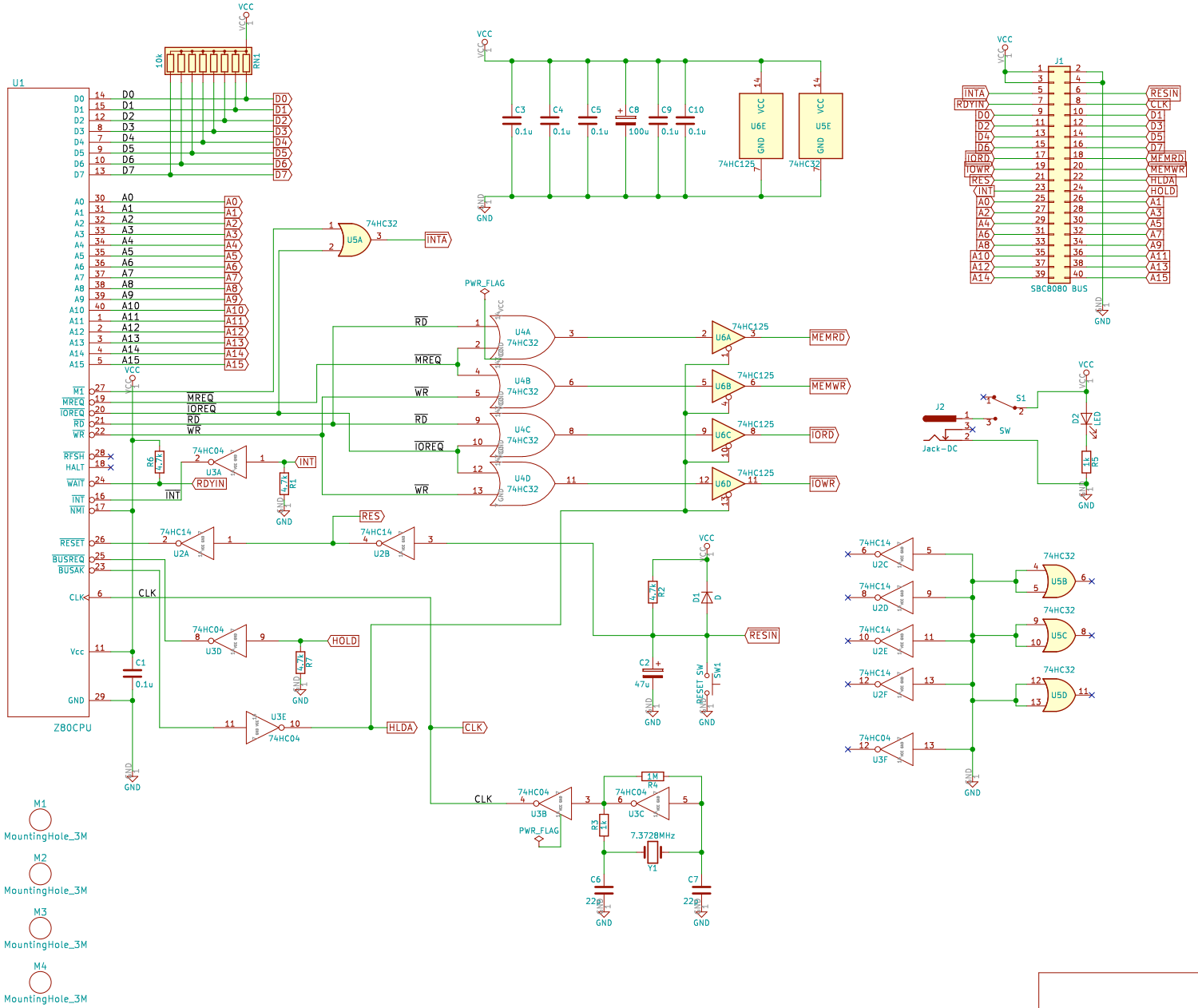

KUNI-NET

Sheet: /

File: Z80-CPUB.sch

Title: Z80 CPU Board (KZ80-CPUB)

Size: A3	Date: 2019-01-20	Rev: 2.0
KiCad E.D.A. kicad (5.0.0-3-g5ebb6b6)		Id: 1/1