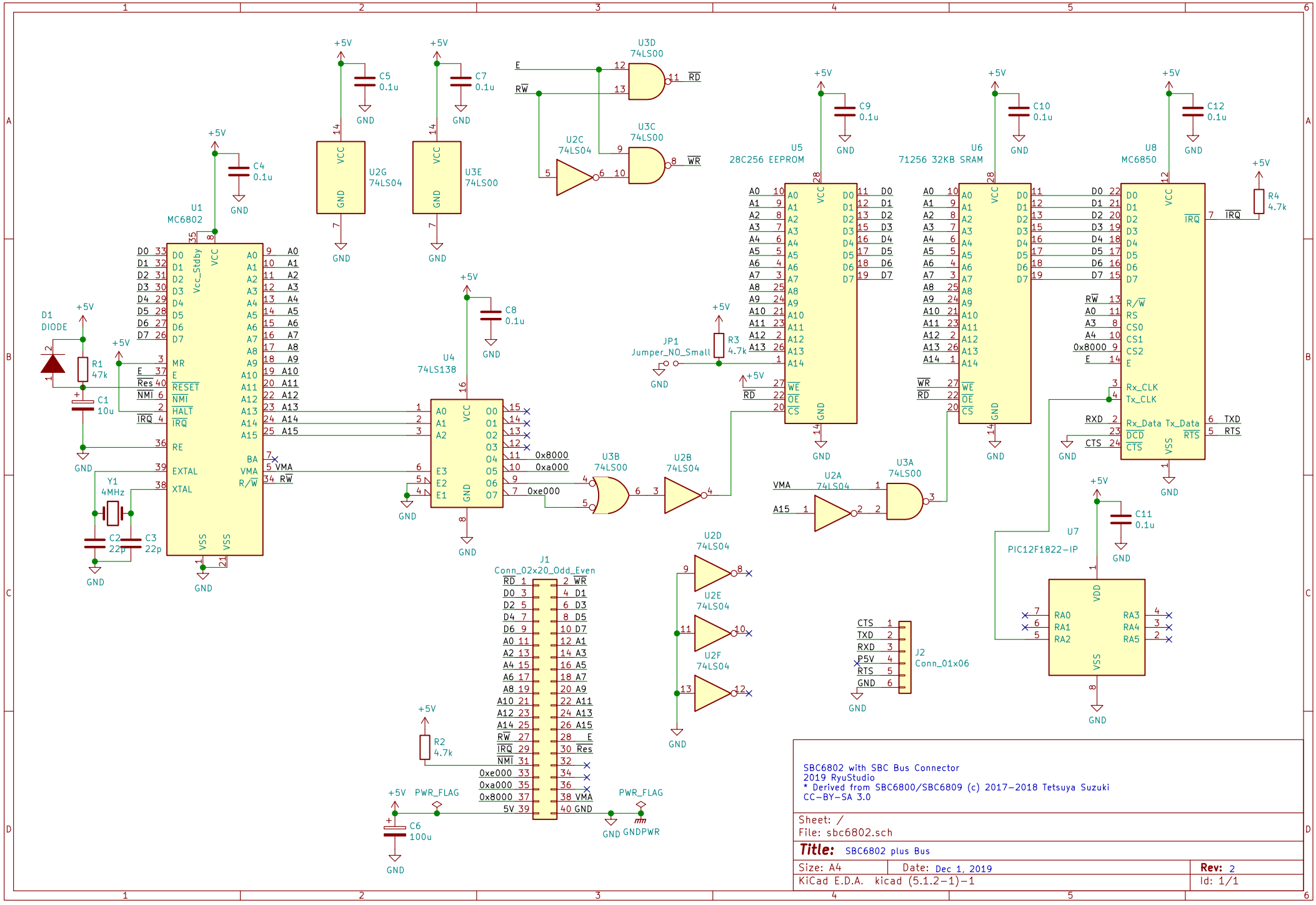
U1
MC6802
U2G
74LS04
U3E
74LS00
U3D
74LS00
U3C
74LS00
U2C
74LS04
U5
28C256 EEPROM
U6
71256 32KB SRAM
U8
MC6850
U4
74LS138
U3B
74LS00
U2B
74LS04
U2A
74LS04
U3A
74LS00
U2D
74LS04
U2E
74LS04
U2F
74LS04
U7
PIC12F1822-IP
J1
Conn_02x20_Odd_Even
J2
Conn_01x06
JP1
Jumper_NO_Small
D1
DIODE
Y1
4MHz
PWR_FLAG
SBC6802 with SBC Bus Connector
2019 RyuStudio
* Derived from SBC6800/SBC6809 (c) 2017-2018 Tetsuya Suzuki
CC-BY-SA 3.0
Sheet: /
File: sbc6802.sch
Title: SBC6802 plus Bus
Size: A4
Date: Dec 1, 2019
Rev: 2
KiCad E.D.A. kicad (5.1.2-1)-1
Id: 1/1