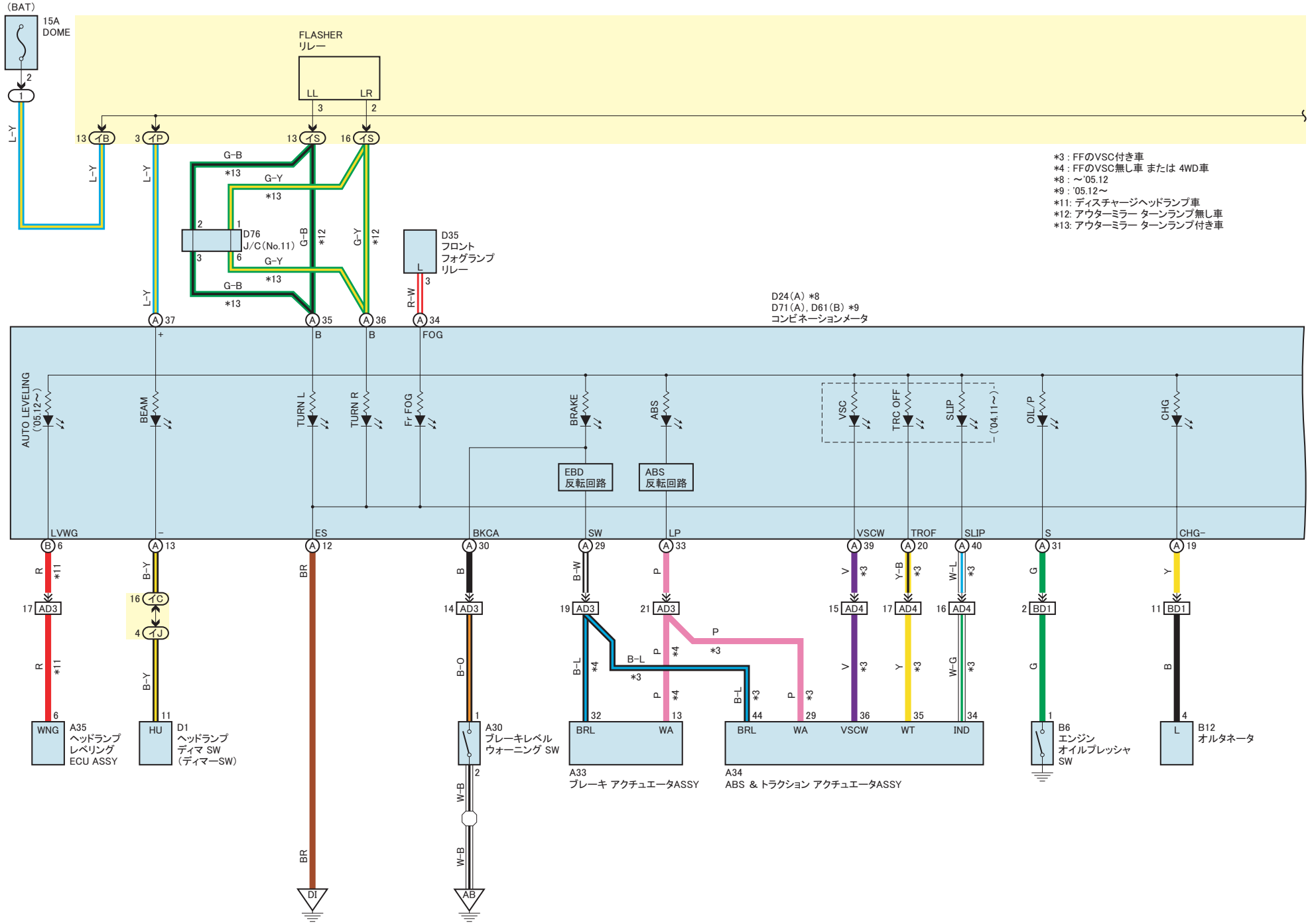

HDAD1910
X516D1008190003