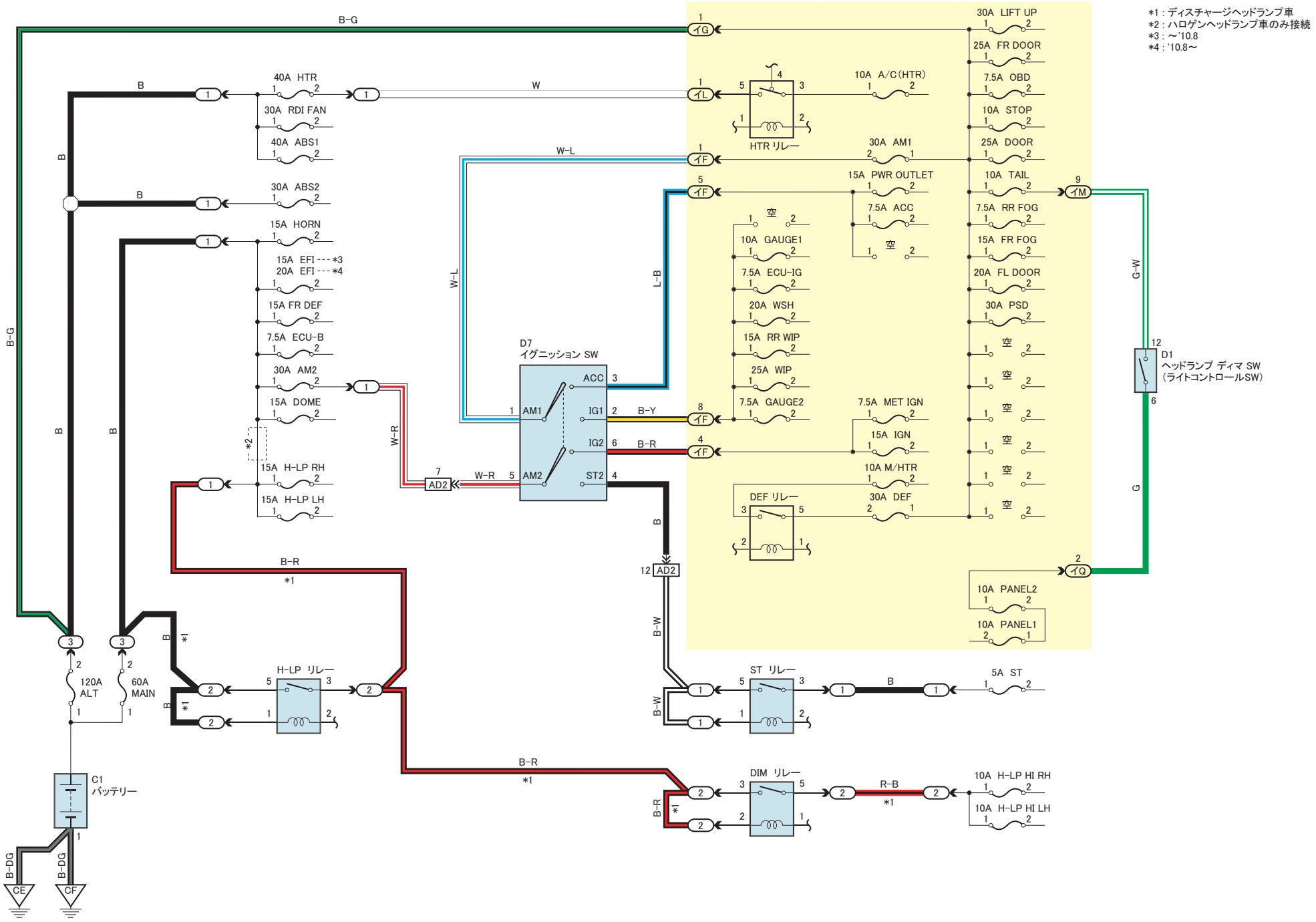

HDAD0110
X516D1008010003