INFORMATION DISCLOSED HEREIN OR ANY PART SHALL NOT BE USED IN WHOLE OR IN PART, DUPLICATED, OR DISCLOSED, OR USED FOR MANUFACTURING, OR ANY OTHER PURPOSE UNLESS SPECIFICALLY AUTHORIZED IN WRITING BY AME 308

REVISIONS				
ZONE	REV	DESCRIPTIONS	DATE	APPR
	A	INITIAL RELEASE	09/24/2020	TT
	B	DRAWING UPDATE TO REFLECT DESIGN CHANGE	10/17/20	TT

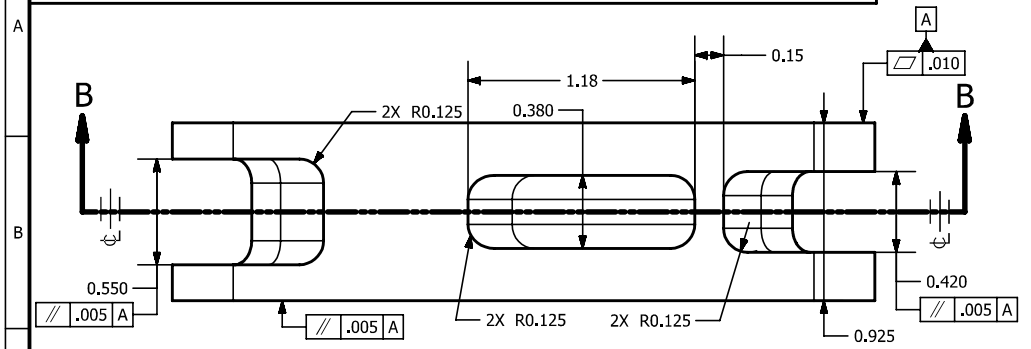

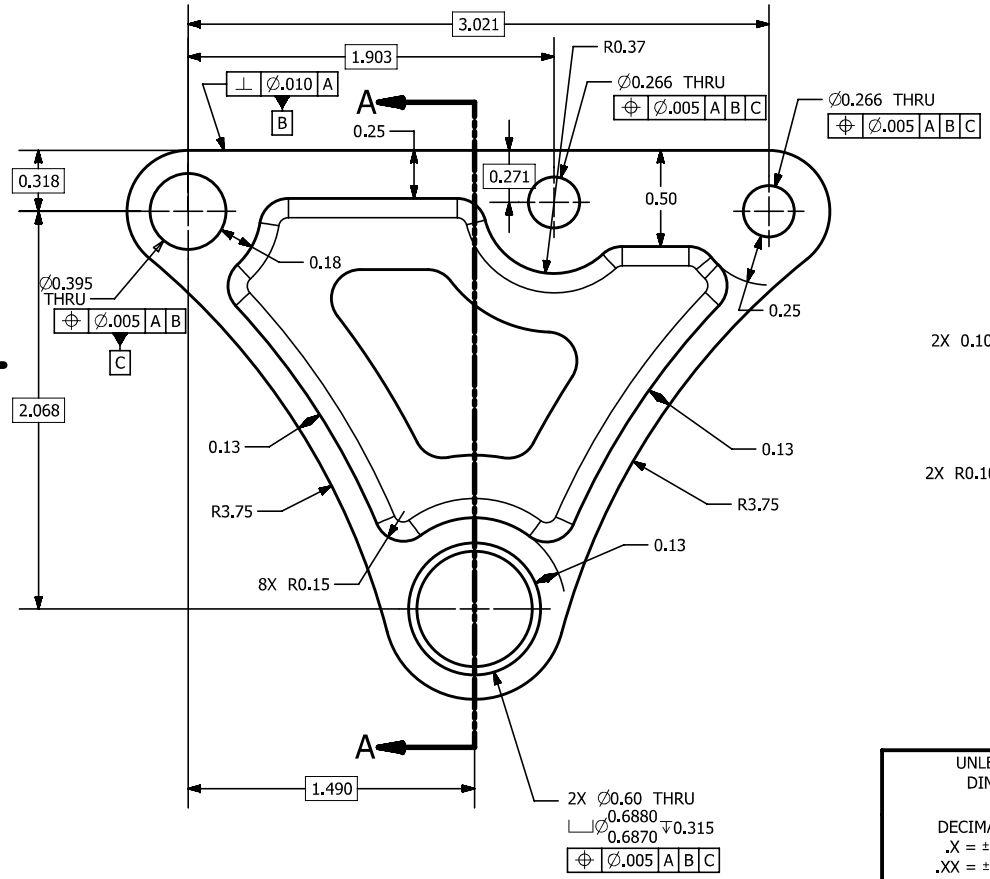

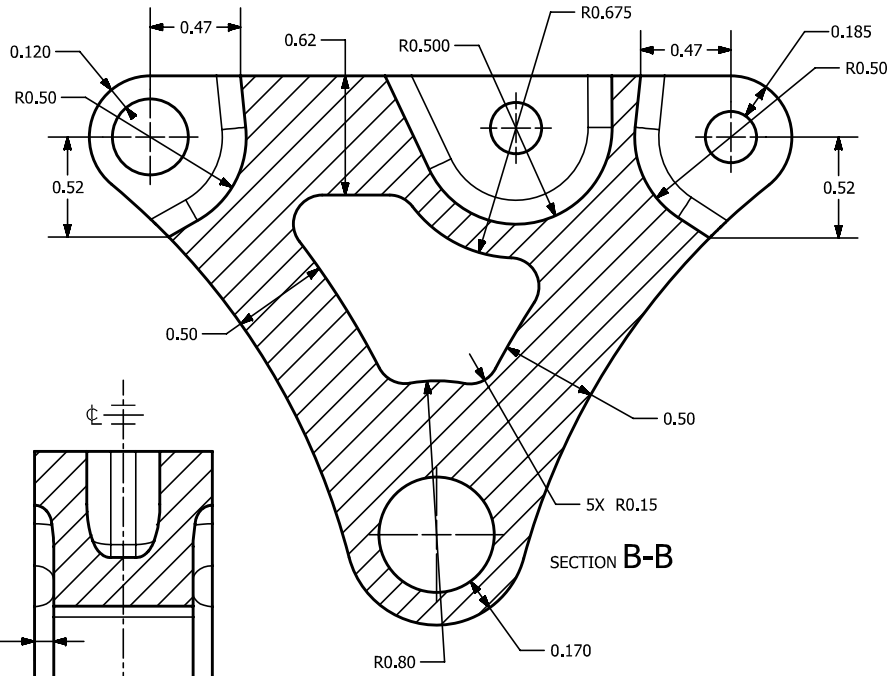

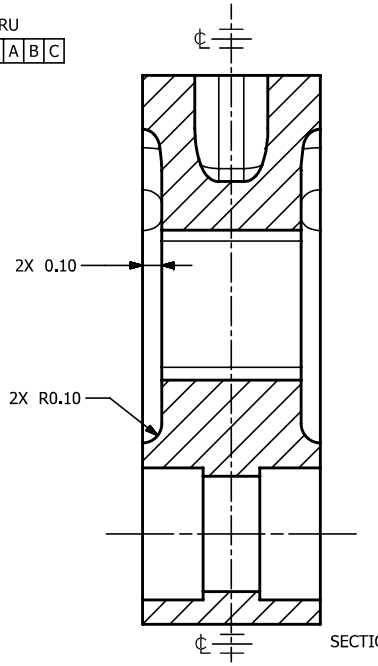

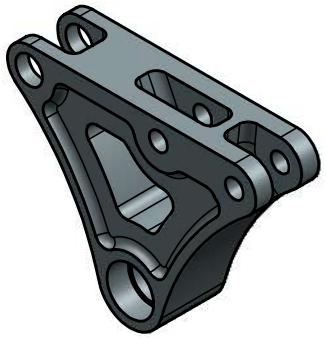

NOTES:
1. MATERIAL = ALUMINUM 6061
2. FINISH = NATURAL
3. BREAK ALL EDGES

UNLESS OTHERWISE SPECIFIED
DIMENSIONS ARE IN INCHES
TOLERANCES ARE:

DECIMALS:
.X = ±0.1
.XX = ±0.01
.XXX = ±0.003

ANGLES:
ALL = ±0.5°

UNDIMENSIONED FEATURES ±0.03
DO NOT SCALE PRINT

INTERPRET DRAWING IN ASSOCIATION WITH ASME Y14.5-2009

REMOVE BURRS AND SHARP EDGES
CBORE AND SPOTFACE
EQUIVALENT TO CORNER RADIUS
R = 0.031 FOR DIA THRU 1.25
R = 0.062 FOR DIA > 1.25
R = 0.031 MIN FOR MATCH PARTS
MACHINED ROUGHNESS = 0.125 RMS MAX

DRAWN BY	B. ROGERS	09/24/20
DESIGN BY	B. ROGERS	09/24/20
DRAWING CHECK		
DESIGN CHECK		
MFG BY		
APPROVED BY		

THIRD ANGLE PROJECTION

CAR ASSY
NEXT ASSEMBLY

AME 308

TITLE

REAR BELL CRANK

SIZE	DWG NO.	SHEET REV
C	Rear Bell Crank	A

SCALE 1:1 | SHEET 1 OF 1