EBDS

WIRELESS & ANTENNAS

Antenne 2G/3G/4G

Sirio

SLP-4G-LTE

EXPERT ET SPÉCIALISTE DES SOLUTIONS DE COMMUNICATION SANS FIL

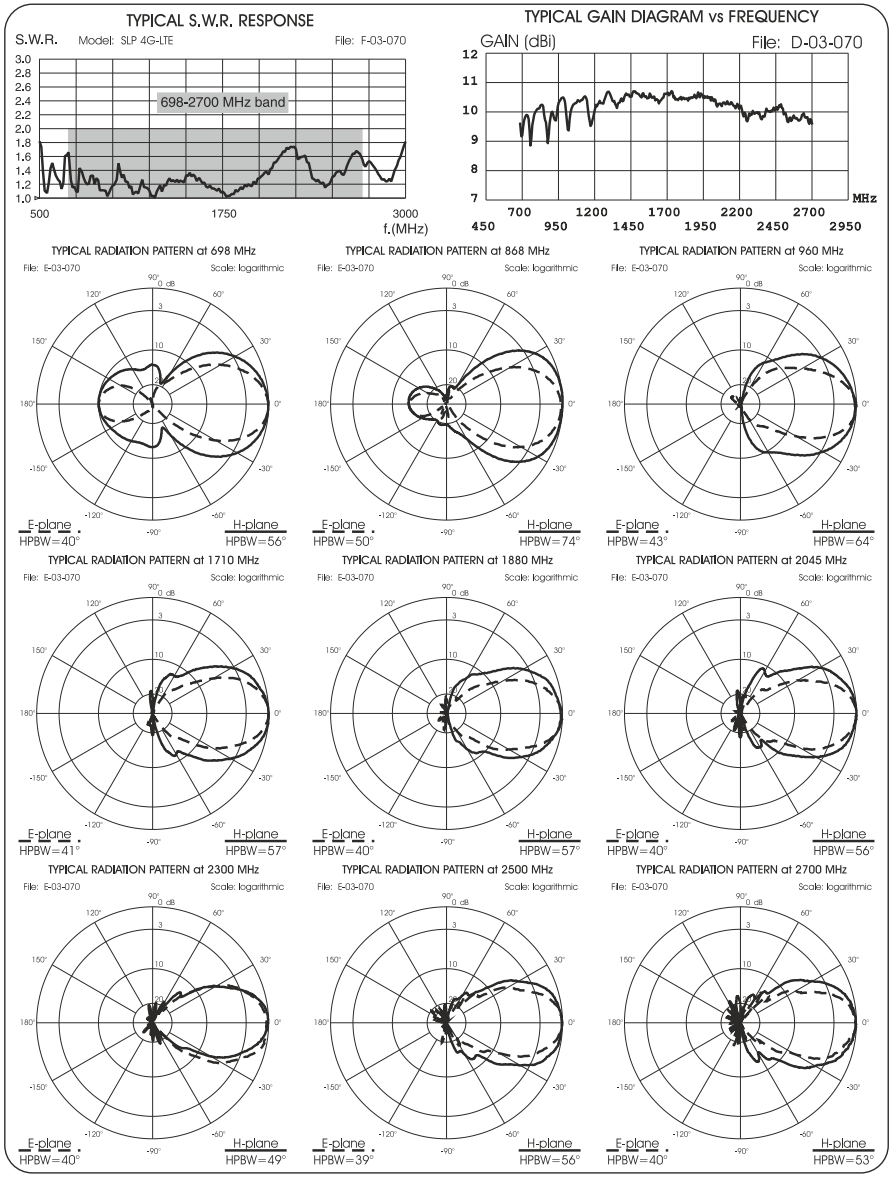

SIRIO antenne HI-QUALITY ANTENNAS MADE IN ITALY

© Copyright SIRIO antenne - Technical Data are subjected to change - Printed in ITALY - Rev. 29/08/2019 - Cod. ID461

SLP 4G LTE

Sirio Log Periodic antenna 698-2700 MHz

MAIN FEATURES

- Directional Wide Band Log Periodic antenna (from 698 to 2700 MHz).
- 4G LTE multi systems (2G-GSM, 3G-UMTS, 4G-LTE, ISM/LoRa, WiFi, W-Lan etc).
- Compact dimension, high linear Gain, good SWR response.
- Made of Aluminium and High quality materials.
- Easy and quick installation on the mast.
- Vertical or Horizontal polarization.
- Optional brackets +-45° polarization installation. Suitable for MiMo configuration
- Fully designed & Manufactured in Italy

PATENTED design - Patent APPROVALS: 009407573-001/002/003/004

Installation Manual

EBDS WIRELESS & ANTENNAS

SPECIFICATIONS / CARACTÉRISTIQUES

Electrical Data / Données èlectriques	
Type / *Type*	Log Periodic Directional Antenna / *Antenne Log Périodique*
Frequency Range / *Gamme de fréquences* @ SWR ≤ 2	698 - 2700 MHz
Impedance / *Impédance*	50 Ω
Radiation Beamwidth / *Largeur de faisceau* @ -3 dB	see diagram / *voir schéma*
Radiation angle / *Angle de rayonnement*	0°
Front to back ratio / *Ratio avant en arrière*	698 - 880 MHz: ≥ 10 dB 880 - 2700 MHz: ≥ 20 dB
Polarization / *Polarisation*	Linear, Vertical or Horizontal / *Linéaire, Verticale ou Horizontale*
Gain / *Gain*	9 ÷ 11 dBi
Max Power / *Puissance maximale* (CW) @ 30° C	10 Watts
Grounding Protection *Protection de mise à la terre*	All metal parts are DC-grounded, the inner conductor shows a DC-short *Toutes les pièces métalliques sont mises à la terre, le conducteur interne présente un court-circuit.*
Cable / *Câble*	50 cm LOW-LOSS (other length on request/*autre longueur sur demande*)
Connector / *Connecteur*	SMA-male (other on request / *autre sur demande*)

Mechanical Data / Données mécaniques	
Materials *Matériaux*	Aluminium, thermoplastic, Galvanized Steel *Aluminium, thermoplastique, acier galvanisé*
Wind Load / *Charge de vent*	92 N @ 130 Km/h - 81 mi/h
Wind Resistance / *Résistance au vent*	130 Km/h; 81 mi/h
Wind Surface / *Surface au vent*	0.07 m^2 ; 0.75 ft^2
Dimensions (approx.) / *Dimensions (approx.)*	850 x 290 x 50 mm; 2.8 x 0.95 x 0.16 ft
Turning radius (approx.) / *Rayon de braquage (approx.)*	820 mm; 2.7 ft
Weight (approx.) / *Poids (approx.)*	830 gr; 1.8 lb
Operating Temperature / *Température de fonctionnement*	-40 °C to +70 °C
Installation type / *Type d'installation*	Mast: ∅ 25-42 mm; ∅ 1-1,6 in with U-bolt *Mât: ∅ 25-42 mm; ∅ 1-1,6 in avec étrier en U*

Standard Fixing Bracket Parts List
Eléments contenus dans le package
Re-order code: SA160

Q.ty	*Description*
1	80x66x16 mm galvanized steel bracket
2	30x24x14 mm galvanized steel bracket
2	M6x79 mm U-bolts
2	M6x12 mm hexagon head screw
4	M6 spring lock washers
6	M6 hexagonal nuts
1	35mm shrincable tube D. 9,5mm

Mounting needed tools:
Outils nécessaires au montage:

10 mm open key / *clé plate 10mm*

SIRIO antenne® HI-QUALITY ANTENNAS MADE IN ITALY

ID461

MOUNTING INSTRUCTIONS / INSTRUCTIONS DE MONTAGE

Bracket Assembly
Assemblage support

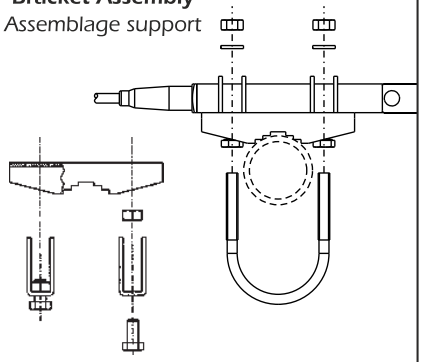

Additional OPTIONAL bracket for +45° or -45° Polarization
Support supplémentaire en OPTION pour inclinaison +45° ou -45°

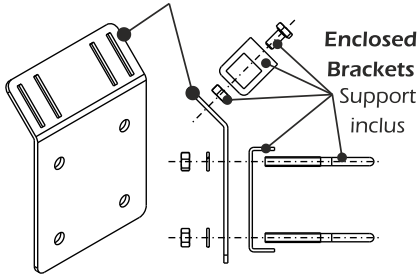

Final Assembly for Vertical Polarization
Montage final pour polarisation verticale

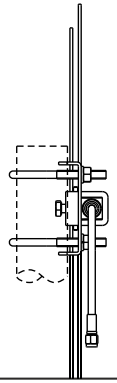

Example of 2x MiMo installation
Exemples d'installation 2x MiMo

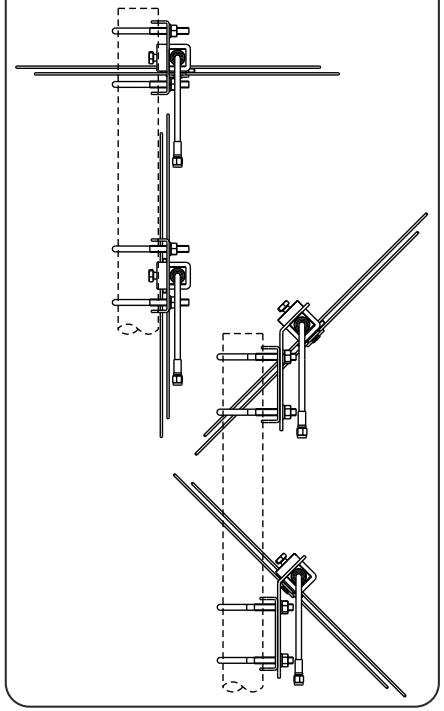

Final Assembly for Horizontal Polarization
Montage final pour polarisation horizontale

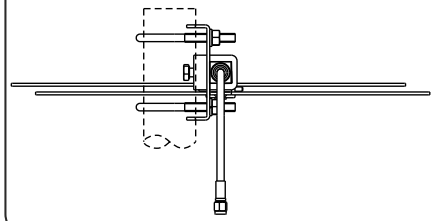

NOS MARQUES

NOS COORDONNÉES

T : 09 72 36 76 46

E : info@ebds.eu
W : www.ebds.eu

340 rue A. Bergès
38330 Montbonnot - France