KING ENGINEERING DRAWINGS

NORTHEAST WRF GRIT REMOVAL, MOVING BELT FILTER
AND EQUALIZATION SYSTEM IMPROVEMENTS
PROJECT NO. 15-0045-UT

JONES EDMUNDS DRAWINGS

NORTHWEST WATER RECLAMATION FACILITY SLUDGE
BLEND TANK IMPROVEMENTS
PROJECT NO. 14-0036-UT

CLEARWATER

BRIGHT AND BEAUTIFUL · BAY TO BEACH

Engineering Department

100 S. Myrtle Avenue, Clearwater, Florida 33756

NORTHEAST WRF IMPROVEMENTS PROJECT

Sect 21 Twn 28, Rng 16

CITY OF CLEARWATER, FLORIDA
ESTABLISHED 1915

CITY OFFICIALS

Frank Hibbard	Mayor
Mark Bunker	Councilmember
Kathleen Beckman	Councilmember
David Allbritton	Councilmember
Hoyt Hamilton	Councilmember
William B. Horne II	City Manager

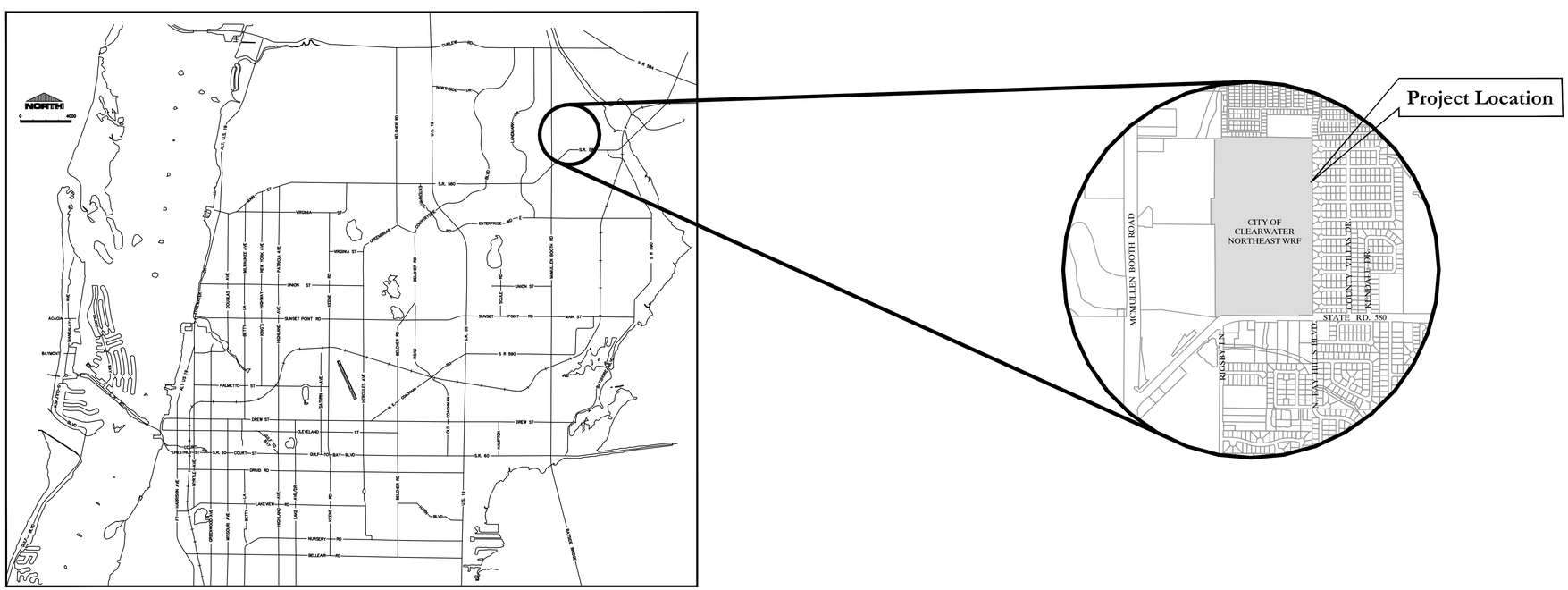

Tara Kivett, P.E.
City Engineer

Approved For Construction _____
CITY ENGINEER Tara Kivett, P.E. #58383

Date Approved _____

King
ENGINEERING ASSOCIATES, INC.

4921 Memorial Highway
One Memorial Center, Suite 300
Tampa, Florida 33634
Phone 813 880-8881
Fax 813 880-8882
www.kingengineering.com
Engineering License #2610

JonesEdmunds
CERTIFICATE OF AUTHORIZATION #1841
730 NE WALDO ROAD, GAINESVILLE, FLORIDA 32641 / (352) 377-5821
324 S HYDE PARK AVE, SUITE 250, TAMPA, FLORIDA 33606 / (813) 258-0703

BID DOCUMENTS

City Project No's. 15-0045-UT & 14-0036-UT
City Plan Set No's. 2016002 & 2019010
City Combined Project No's. 19-0029-UT

O:\ENV_ENG\2110\210\002\production\Drawings_Coversht.dwg, March 18, 2020 10:33 AM, MARK J. GLADBACH, King Engineering Associate Inc.

Sheet Number	Sheet Title
	GENERAL
G0.00	COVER SHEET
G0.01	COVER SHEET AND SHEET INDEX
G1.01	GENERAL NOTES AND ABBREVIATIONS
G1.02	NORTHEAST WRF PROCESS FLOW DIAGRAM
G1.03	HEADWORKS PROCESS FLOW DIAGRAM
G1.04	EQUALIZATION TANK PROCESS FLOW DIAGRAM
G1.05	SEQUENCE OF CONSTRUCTION SITE PLAN
G1.06	PROPOSED SITE PLAN
	CIVIL
C1.00	OVERALL KEY MAP
C1.01	EXISTING YARD PIPING DEMO PLAN (1)
C1.02	EXISTING YARD PIPING DEMO PLAN (2)
C1.03	EXISTING YARD PIPING DEMO PLAN (3)
C1.04	EXISTING YARD PIPING DEMO PLAN (4)
C2.01	PROPOSED YARD PIPING PLAN (1)
C2.02	PROPOSED YARD PIPING PLAN (2)
C2.03	PROPOSED YARD PIPING PLAN (3)
C2.04	PROPOSED YARD PIPING PLAN (4)
C3.01	PROPOSED PAVING, GRADING, AND DRAINAGE (1)
C3.02	PROPOSED PAVING, GRADING, AND DRAINAGE (2)
C3.03	PROPOSED PAVING, GRADING, AND DRAINAGE (3)
C3.04	PROPOSED PAVING, GRADING, AND DRAINAGE (4)
C3.05	PROPOSED PAVING, GRADING, AND DRAINAGE DETAILS (1)
C3.06	PROPOSED PAVING, GRADING, AND DRAINAGE DETAILS (2)
	DETAILS
D1.01	MISCELLANEOUS DETAILS (1)
D1.02	MISCELLANEOUS DETAILS (2)
D1.03	MISCELLANEOUS DETAILS (3)
	STRUCTURAL
S1.00	GENERAL NOTES, ABBREVIATIONS, AND SYMBOLS
S1.01	INFLUENT STRUCTURE DEMOLITION PLAN
S1.02	INFLUENT STRUCTURE DEMOLITION SECTIONS
S1.03	INFLUENT STRUCTURE PLAN
S1.04	INFLUENT STRUCTURE SECTIONS
S1.05	INFLUENT STRUCTURE DETAILS
S2.00	PRIMARY CLARIFIER & PUMP BUILDING DEMOLITION PLAN AND SECTIONS
S2.01	PUMP BUILDING PLANS
S2.02	PUMP BUILDING SECTION AND DETAILS
S2.03	MOVING BELT FILTERS FOUNDATION PLAN
S2.04	MOVING BELT FILTERS PLATFORM PLAN
S2.05	MOVING BELT FILTERS SECTIONS
S2.06	MOVING BELT FILTERS DETAILS
S3.00	EQUALIZATION TANK EXCAVATION AND BACKFILL PLAN
S3.01	EQUALIZATION TANK PLAN
S3.02	STAIR TOWER AND MIXER PLATFORM PLANS
S3.03	STAIR TOWER AND MIXER PLATFORM SECTIONS
S3.04	STAIR TOWER AND MIXER PLATFORM FRAMING ELEVATIONS
S3.05	STAIR TOWER AND MIXER PLATFORM DETAILS
S5.01	STANDARD DETAILS 2 OF 2
S5.02	STANDARD DETAILS 2 OF 2
	MECHANICAL
M1.01	INFLUENT STRUCTURE UPPER LEVEL DEMO PLAN
M1.02	INFLUENT STRUCTURE LOWER LEVEL DEMO PLAN
M1.03	INFLUENT STRUCTURE MECHANICAL DEMO PLAN SECTION – A
M1.04	INFLUENT STRUCTURE MECHANICAL DEMO PLAN SECTION – B
M1.05	INFLUENT STRUCTURE MECHANICAL DEMO PLAN SECTION – C
M1.06	INFLUENT STRUCTURE MECHANICAL DEMO PLAN DETAILS
M1.10	INFLUENT STRUCTURE UPPER LEVEL MECHANICAL IMPROVEMENTS PLAN
M1.11	INFLUENT STRUCTURE LOWER LEVEL MECHANICAL IMPROVEMENTS PLAN
M1.12	INFLUENT STRUCTURE HEAD-CELL SECTION A
M1.13	INFLUENT STRUCTURE HEAD-CELL SECTION B
M1.14	INFLUENT STRUCTURE MECHANICAL SECTION – C
M1.15	INFLUENT STRUCTURE MECHANICAL SECTION – D
M1.16	INFLUENT STRUCTURE MECHANICAL SECTIONS – E & F
M2.01	EX. PUMP BUILDING & PRIMARY CLARIFIER DEMO PLAN
M2.02	EX. PUMP BUILDING SECTION DEMO PLAN
M2.03	EX. PUMP BUILDING SECTION DEMO PLAN DETAILS
M2.04	EX. PRIMARY CLARIFIER SECTION DEMO PLAN
M2.05	EX. PRIMARY CLARIFIER SECTION DEMO PLAN AND DETAILS
M2.10	PUMP BUILDING AND MOVING BELT FILTER PLAN
M2.11	PUMP BUILDING AND MOVING BELT FILTER WATER, AIR, DRAIN PIPING
M2.12	PUMP BUILDING SECTION
M2.13	PUMP BUILDING UPPER LEVEL AND LOWER LEVEL
M2.20	MOVING BELT FILTER ENLARGED UPPER LEVEL PLAN
M2.21	MOVING BELT FILTER ENLARGED LOWER LEVEL PLAN
M2.22	MOVING BELT FILTER SECTION
M2.23	PUMP BUILDING AND SALSNES FILTER SECTION
M3.01	IRRIGATION TANK DEMO PLAN
M3.02	IRRIGATION TANK DEMO PLAN DETAILS
M3.10	EQUALIZATION TANK GENERAL ARRANGEMENT & SITE PLAN
M3.11	EQUALIZATION TANK SECTIONS A, B, C, D
M3.12	EQUALIZATION TANK SECTIONS E, F, G
M3.13	EQUALIZATION TANK SECTIONS H, I, J
M3.14	EQUALIZATION TANK SUPPLY PUMP STATION ENLARGED PLAN AND SECTIONS
M3.15	EQUALIZATION TANK RETURN PUMP STATION ENLARGED PLAN AND SECTIONS
M4.01	INFLUENT STRUCTURE ODOR CONTROL DEMO PLAN
M4.02	INFLUENT STRUCTURE ODOR CONTROL DEMO PLAN
M4.10	INFLUENT STRUCTURE ODOR CONTROL PROPOSED IMPROVEMENTS
M5.00	IN-PLANT LIFT STATION
	ELECTRICAL
E0.0	ELECTRICAL SYMBOL LEGEND AND LIGHTING FIXTURE SCHEDULE
E1.0	ELECTRICAL SITE PLAN (NORTH) – EXISTING & DEMOLITION
E1.1	ELECTRICAL SITE PLAN – NEW CONSTRUCTION
E1.2	ELECTRICAL SITE PLAN (SOUTH) – NEW CONSTRUCTION
E2.0	POWER ONE-LINE DIAGRAM – EXISTING 'MCC-15'
E2.1	HEADWORKS PLAN (UPPER LEVEL) – ELECTRICAL DEMOLITION
E2.2	HEADWORKS PLAN (LOWER LEVEL) – ELECTRICAL DEMOLITION
E2.3	HEADWORKS PLAN (UPPER LEVEL) – ELECTRICAL
E2.4	HEADWORKS PLAN (LOWER LEVEL) – ELECTRICAL
E3.0	POWER ONE-LINE DIAGRAM – EXISTING 'MCC-14'
E3.1	PRIMARY CLARIFIER PUMP BUILDING PLAN – ELECTRICAL DEMOLITION
E3.2	ENLARGED ELECTRICAL ENCLOSURES (SF-MCC & FET-MCC)
E3.3	POWER ONE-LINE DIAGRAM – NEW 'MCC-15'
E3.4	POWER ONE-LINE DIAGRAM – NEW 'MCC-15' (CONTINUED)
E3.5	PUMP BUILDING AND SALSNES FILTER PLAN – POWER & LIGHTING
E4.0	POWER ONE-LINE DIAGRAM – NEW 'MCC-16'
E4.1	EQUALIZATION TANK PLAN – ELECTRICAL
E5.0	PANEL SCHEDULES
E5.1	PANEL SCHEDULES
E6.1	LOCAL CONTROL PANEL SCHEDULES
E7.0	ELECTRICAL DETAILS
E7.1	POWER ONE-LINE DIAGRAM – EXISTING 'MCC-9000'
E7.2	IN-PLANT PUMP STATION CONTROL PANEL LAYOUT
E8.0	POWER ONE-LINE DIAGRAM – EXISTING 'MCC-4002'
E8.1	SLUDGE THICKENING PLAN – ELECTRICAL DEMOLITION
	INSTRUMENTATION
I1.00	PLC & CONTROLS NETWORK DIAGRAM
I1.01	INSTRUMENTATION SITE PLAN
I2.00	PROCESS & INSTRUMENTATION ABBREVIATIONS AND LEGENDS
I2.01	GRIT REMOVAL SYSTEM PROCESS AND INSTRUMENTATION DIAGRAM
I2.02	MOVING BELT FILTER SYSTEM PROCESS AND INSTRUMENTATION DIAGRAM
I2.03	EQUALIZATION TANK SYSTEM PROCESS AND INSTRUMENTATION DIAGRAM
I2.04	EQUALIZATION TANK AIR SYSTEM AND INSTRUMENTATION DIAGRAM

CLEARWATER

BRIGHT AND BEAUTIFUL · BAY TO BEACH

CITY OF CLEARWATER, FLORIDA ESTABLISHED 1915

Engineering Department

100 S. Myrtle Avenue, Clearwater, Florida 33756

NORTHEAST WRF GRIT REMOVAL, MOVING BELT FILTER AND EQUALIZATION SYSTEM IMPROVEMENTS

Sect 21 Twn 28, Rng 16

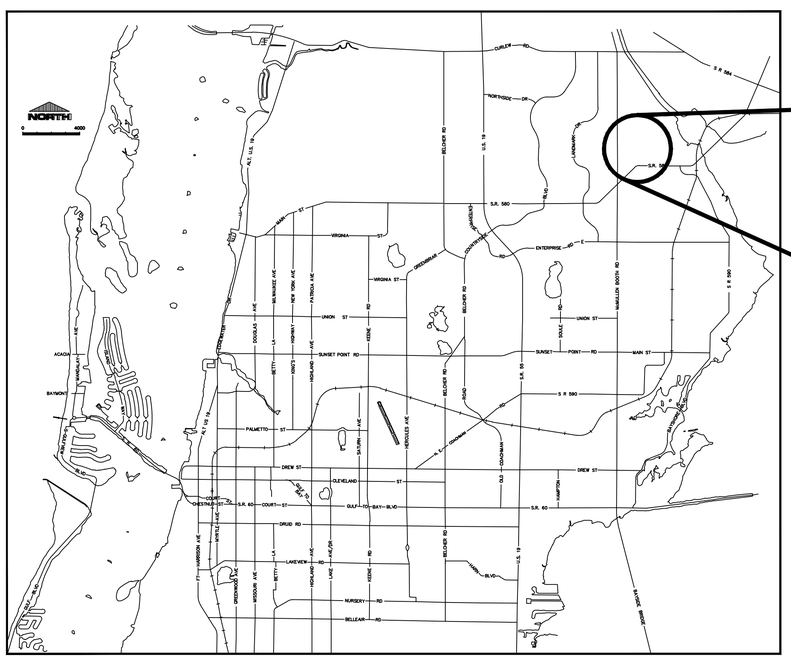

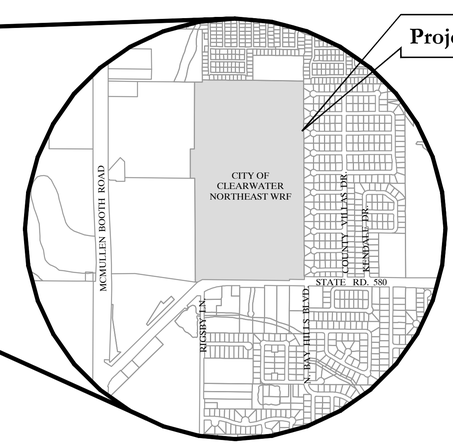

CITY OFFICIALS

Frank Hibbard	Mayor
Mark Bunker	Councilmember
Kathleen Beckman	Councilmember
David Allbritton	Councilmember
Hoyt Hamilton	Councilmember
William B. Horne II	City Manager

Tara Kivett, P.E.
City Engineer

Approved For Construction

CITY ENGINEER Tara Kivett, P.E. #58383

Date Approved

King
ENGINEERING ASSOCIATES, INC.

4921 Memorial Highway
One Memorial Center, Suite 300
Tampa, Florida 33634
Phone 813 880-8881
Fax 813 880-8882
www.kingengineering.com
Engineering License #2610

BID DOCUMENTS

City Project No's. 15-0045-UT
City Plan Set No's. 2016002

O:\ENV_ENG\2110\210\002\production\Drawings_Cover\sht.dwg, March 18, 2020 1:49 PM, MARK J. GLADBACH, King Engineering Associate Inc.

ABBREVIATIONS

AVV	AIR & VACUUM VALVE ASSEMBLY
AFF	ABOVE FINISH FLOOR
BLDG	BUILDING
BV	BALL VALVE
BWR	BACKWASH RETURN
CIP	CAST IRON PIPE
CLS	CHLORINE SOLUTION
CMP	CORRUGATED METAL PIPE
CONC	CONCRETE
DEMO	DEMOLITION
DIA	DIAMETER
DIP	DUCTILE IRON PIPE
DL	DRAIN LINE
DTS	DIGESTER TANK SLUDGE
EA	EACH
EFF OR EFFL	EFFLUENT
EFW	EFFLUENT FLUSHING WATER / PLANT WATER
EIS	EFFLUENT IRRIGATION STORAGE
EL / ELEV	ELEVATION
ERCP	ELLIPTICAL REINFORCED CONCRETE PIPE
EX / EXIST	EXISTING
FLG	FLANGE
FLEX	FLEXIBLE
FM	FORCE MAIN
FOC	FIBER OPTIC CABLE
FRP	FIBERGLASS REINFORCED PLASTIC
GALV	GALVANIZED
HDPE	HIGH DENSITY POLYETHYLENE
HP	HORSE POWER
HW	HOT WATER
HWL	HIGH WATER LEVEL
INF	INFLUENT
INV	INVERT
IRR	IRRIGATION
JB	JUNCTION BOX
LCP	LOCAL CONTROL PANEL
MCC	MOTOR CONTROL CENTER
MJ	MECHANICAL JOINT
NFV	NOT FIELD VERIFIED
NTS	NOT TO SCALE
NW	NORTHWEST
ORE	OXYDATION REACTOR EFFLUENT
PE	PRIMARY EFFLUENT
PLS	PLANT LIFT STATION
PLV	PLUG VALVE
POT	POTABLE WATER
PSL	PRIMARY SLUDGE LINE
PVC	POLYVINYL CHLORIDE
RAS	RETURN ACTIVATED SLUDGE
RCP	REINFORCED CONCRETE PIPE
RCW	RECLAIMED WATER
RED	REDUCER
RMJ	RESTRAINED MECHANICAL JOINT
RWGV	RESILIENT WEDGE GATE VALVE
SS	STAINLESS STEEL
SCE	SECONDARY EFFLUENT
SD	SLUDGE DRAIN
SEW	SEWAGE
STCHN	STANCHION
STL	STEEL
TDS	THICKENED DIGESTED SLUDGE
TEF	THICKENER EFFLUENT
TS&V	TAPPING SLEEVE & VALVE
TWAS	THICKENED WASTE ACTIVATED SLUDGE
TYP	TYPICAL
UNK	UNKNOWN
VVH	VERTICAL VERIFICATION HOLE
W /	WITH
WAS	WASTE ACTIVATED SLUDGE
WM	WATER MAIN
WS	WASTE SLUDGE

AREA CLASSIFICATIONS

HEADWORKS BUILDING UPSTAIRS	CLASS 1, DIVISION 1
HEADWORKS BUILDING DOWNSTAIRS	UNCLASSIFIED
MOVING BELT FILTER FEED PUMP BUILDING	CLASS 1, DIVISION 2, GROUP D
ODOR CONTROL SCRUBBER AREA	CLASS 1, DIVISION 2, GROUP D
INSIDE THE EQ TANK AND WITHIN 10 FEET OF THE TANK	CLASS 1, DIVISION 2, GROUP D
AREAS MORE THAN 10 FEET FROM THE TANK	UNCLASSIFIED
LIFT STATION 2	UNCLASSIFIED

UTILITY OWNERS

SPECTRUM
ATTENTION: Mr. Ted Bingham
700 CARILLON PARKWAY, SUITE 6
ST. PETERSBURG, FLORIDA 33716-1123
PHONE: (727) 329-2847

FRONTIER COMMUNICATIONS, INC.
ATTENTION: MR. CHRIS BLAUVELT
MC: FLCW5033
1280 CLEVELAND STREET
CLEARWATER, FLORIDA 33782
PHONE: (727) 562-1130

WIDE OPEN WEST (WOW!)
FLSP2144
ATTENTION: MR. JAY YOUNG, LEAD
FIELD SUPPORT TECH
3001 GANDY BOULEVARD NORTH
PINELLAS PARK, FLORIDA 33782
PHONE: (727) 239-0156 OFFICE

DUKE ENERGY
ATTENTION: MR. RICO ASHLEY
2166 PALMETTO STREET, BLDG. F
CLEARWATER, FLORIDA 33765
PHONE: (727) 562-5767
CITY OF CLEARWATER

CLEARWATER GAS SYSTEM
ATTENTION: MR. BOBBY MORIG
401 NORTH MYRTLE AVENUE
CLEARWATER, FLORIDA 33755
PHONE: (727) 562-4900 EXT. 7423

CITY OF CLEARWATER
ENGINEERING DEPARTMENT – TRAFFIC DIVISION
ATTENTION: MR. PAUL BERTELS
100 SOUTH MYRTLE AVENUE, ROOM 220
CLEARWATER, FLORIDA 33756-4748
PHONE: (727) 562-4794

CITY OF CLEARWATER
ENGINEERING DEPARTMENT – SURVEY DIVISION
ATTENTION: MR. TOM MAHONY
100 SOUTH MYRTLE AVENUE, ROOM 220
CLEARWATER, FLORIDA 33756-4748
PHONE: (727) 562-4748

CITY OF CLEARWATER
ENGINEERING DEPARTMENT – PUBLIC UTILITIES
ATTENTION: MR. DAVID PORTER
1650 NORTH ARCTURAS AVENUE
CLEARWATER, FLORIDA 33755
PHONE: (727) 562-4960 EXT. 7248

CITY OF CLEARWATER
ENGINEERING DEPARTMENT – CONSTRUCTION MANAGEMENT
ATTENTION: MR. TIM KURTZ
100 SOUTH MYRTLE AVENUE, ROOM 220
CLEARWATER, FLORIDA 33756
PHONE: (727) 562-4737

SUB-SURFACE UTILITY ENGINEERING TABLE

VVH #	MEASURE DOWN (FT)	DESCRIPTION
101	1.54	(2) 2" GRAY PVC BURIED ELECTRIC
102	1.91	(2) 2" GRAY PVC BURIED ELECTRIC
103	1.46	16" D.I.P. RECLAIMED WATER (WRAPPED)
104	5.14	(NFV) D.I.P.
105	4.44	6" D.I.P.
106	5.01	(NFV) C.I.P.
107	2.56	4" DIP FORCE MAIN
108	5.61	(NFV) DIP
109	5.64	(NFV) DIP
110	4.76	(NFV) DIP
111	3.03	6" DIP WATER MAIN
112	3.25	(2) 6" PVC BURIED ELECTRIC
113	2.67	4" DIP FORCE MAIN
114	3.35	6" DIP WATER MAIN
115	1.23	2" WHITE PVC FOC
116	1.74	1" GRAY PVC FOC
117	1.93	1/2" DIRECT BURY FOC
118	1.14	1" GRAY PVC FOC
119	4.63	(NFV) CONCRETE STORM PIPE
120	5.29	(NFV) DIP
121	1.67	CON CAP BURIED ELECTRIC
122	2.51	(NFV) STORM DRAIN
123	4.99	4" DIP FORCE MAIN
124	3.22	6" BLUE PVC UNK
125	5.08	(NFV) DIP
126	2.95	6" DIP (WRAPPED)
127	1.58	(2) 2" GRAY PVC BURIED ELECTRIC
128	1.01	6" DIP
129	6.55	4" GRAY PVC FORCE MAIN

GENERAL NOTES

1. ALL WORK PERFORMED SHALL COMPLY WITH THE REGULATIONS AND ORDINANCES OF THE VARIOUS GOVERNMENTAL AGENCIES HAVING JURISDICTION OVER THE WORK.
2. ALL WORKMANSHIP AND MATERIALS USED IN THE CONSTRUCTION OF THIS PROJECT SHALL CONFORM TO THE LATEST CITY OF CLEARWATER STANDARDS, CONTRACT DOCUMENTS AND SPECIFICATIONS UNLESS OTHERWISE NOTED.
3. SPECIFIC REQUIREMENTS OF THE FLORIDA DEPARTMENT OF TRANSPORTATION (FDOT) "DESIGN STANDARDS" AND "STANDARD SPECIFICATIONS FOR ROAD AND BRIDGE CONSTRUCTION", MOST CURRENT EDITIONS, ARE INCORPORATED INTO THE CONTRACT DOCUMENTS BY REFERENCE.
4. THE CONTRACTOR SHALL OBTAIN ALL REQUIRED PERMITS PRIOR TO CONSTRUCTION.
5. THE CONTRACTOR SHALL NOTIFY ALL UTILITY COMPANIES AT LEAST FORTY EIGHT (48) HOURS PRIOR TO START OF CONSTRUCTION, DEMOLITION AND/OR EXCAVATION IN ACCORDANCE WITH FLORIDA STATUTES.
6. THE CONTRACTOR SHALL CALL SUNSHINE 811, PREVIOUSLY KNOWN AS SUNSHINE STATE ONE CALL OF FLORIDA, AT 1-800-432-4770 OR 811, A MINIMUM OF TWO (2) DAYS AND A MAXIMUM OF FIVE (5) DAYS PRIOR TO START OF CONSTRUCTION.
7. LOCATIONS, ELEVATIONS AND DIMENSIONS OF EXISTING UTILITIES, STRUCTURES AND OTHER FEATURES ARE SHOWN ACCORDING TO THE BEST INFORMATION AVAILABLE AT THE TIME OF THE PREPARATION OF THESE PLANS, BUT DO NOT PURPORT TO BE ABSOLUTELY CORRECT. THE CONTRACTOR SHALL VERIFY THE LOCATION, ELEVATIONS AND DIMENSIONS OF ALL EXISTING UTILITIES, STRUCTURES AND OTHER FEATURES AFFECTING THE WORK PRIOR TO CONSTRUCTION.
8. THE CONTRACTOR SHALL BE RESPONSIBLE TO REVIEW THE SITE TO DETERMINE EXISTING CONDITIONS. ANYTHING NOT SHOWN ON THESE PLANS SHALL BE BROUGHT TO THE ATTENTION OF THE CITY'S ENGINEERING REPRESENTATIVE AND SHALL NOT CONSTITUTE ADDITIONAL SCOPE OF WORK APPROVED BY THE ENGINEER.
9. THE CONTRACTOR SHALL CONTACT THE CITY'S ENGINEERING REPRESENTATIVE IMMEDIATELY CONCERNING ANY CONFLICTS ARISING DURING CONSTRUCTION.
10. ALL CONSTRUCTION ACTIVITIES MUST CONFORM TO THE LOCAL NOISE ORDINANCE.
11. HOURS OF WORK SHALL BE IN ACCORDANCE WITH THE LOCAL GOVERNMENTAL AGENCY.
12. THESE DRAWINGS DO NOT INCLUDE NECESSARY COMPONENTS FOR CONSTRUCTION SAFETY. THE CONTRACTOR IS SOLELY RESPONSIBLE FOR CONSTRUCTION SAFETY. SPECIAL PRECAUTIONS MAY BE REQUIRED IN THE "VICINITY" OF POWER LINES AND OTHER UTILITIES.
13. THE CONTRACTOR SHALL FURNISH, ERECT AND MAINTAIN ALL NECESSARY TRAFFIC CONTROL AND SAFETY DEVICES IN ACCORDANCE WITH THE U.S. DEPARTMENT OF TRANSPORTATION, "MANUAL ON UNIFORM TRAFFIC CONTROL DEVICES" AND THE LATEST FLORIDA DEPARTMENT OF TRANSPORTATION "DESIGN STANDARDS".
14. THE CONTRACTOR SHALL PROVIDE, ERECT AND MAINTAIN EFFECTIVE BARRICADES, DANGER SIGNALS, SIGNS AND PEDESTRIAN DETOURS IN ALL AREAS WHERE REQUIRED FOR THE PROTECTION OF THE WORK AND THE SAFETY OF THE PUBLIC.
15. MAINTENANCE OF TRAFFIC (MOT): IF IT BECOMES NECESSARY FOR THE CONTRACTOR TO CLOSE ANY STREET TO THROUGH TRAFFIC WITHIN THE LIMITS OF CONSTRUCTION, ACCESS FOR LOCAL TRAFFIC WITH DESTINATION WITHIN THE PROJECT LIMITS OF CONSTRUCTION SHALL BE MAINTAINED. IF DURING CONSTRUCTION, ACCESS FOR LOCAL TRAFFIC IS CHANGED, THE PROPERTY OWNERS AFFECTED SHALL BE GIVEN AT LEAST THREE (3) DAYS ADVANCE NOTICE. THE CONTRACTOR SHALL SUBMIT TO THE CITY'S ENGINEERING REPRESENTATIVE THE TRAFFIC CONTROL PLAN FOR APPROVAL PRIOR TO IMPLEMENTATION.
16. A REGISTERED LAND SURVEYOR, AT THE CONTRACTOR'S EXPENSE, SHALL RESET ALL SECTION CORNERS OR PROPERTY CORNERS DISTURBED BY ANY CONSTRUCTION RELATED ACTIVITIES.
17. ANY NATIONAL GEODETIC SURVEY (NGS) MONUMENT WITHIN THE LIMITS OF CONSTRUCTION IS TO BE PROTECTED. IF IN DANGER OF DAMAGE, CONTRACTOR SHALL NOTIFY THE CITY'S FIELD REPRESENTATIVE IMMEDIATELY AND CONTACT THE NATIONAL GEODETIC SURVEY INFORMATION CENTER.
18. UNLESS NOTED ON THE PLANS, FINAL GRADE IS TO GENERALLY BE THE SAME AS EXISTING GRADE. RESTORE UNIFORMLY AND FOR PROPER YARD DRAINAGE GRADE TOWARD ROADWAY.
19. ALL NEW UTILITIES SHALL BE INSTALLED WITH THE MINIMUM THIRTY SIX (36) INCHES OF COVER.
20. WHERE UTILITIES CROSS THE LOWEST PIPE SHALL BE INSTALLED FIRST.
21. THE CONTRACTOR SHALL BE RESPONSIBLE FOR TESTING OF ALL NEWLY CONSTRUCTED UTILITIES IN ACCORDANCE WITH CURRENT STANDARDS OF LOCAL JURISDICTION. THE CONTRACTOR SHALL NOTIFY THE LOCAL JURISDICTION AND THE OWNER OR AN AUTHORIZED REPRESENTATIVE AT LEAST FORTY EIGHT (48) HOURS IN ADVANCE OF PERFORMING TESTS.
22. THE CONTRACTOR SHALL PROVIDE ALL SHEETING, SHORING AND BRACING REQUIRED TO PROTECT ADJACENT STRUCTURES OR TO MINIMIZE TRENCH WIDTH. WHERE A SEPARATE PAY ITEM IS NOT PROVIDED, THE COST OF ALL SHEETING AND BRACING REQUIRED SHALL BE INCLUDED IN THE CONTRACT PRICE FOR THE ITEM OF WORK FOR WHICH SHEETING, SHORING AND BRACING IS ANTICIPATED TO BE REQUIRED IN ACCORDANCE WITH LOCAL, STATE, OR FEDERAL REGULATIONS FOR CONSTRUCTION.
23. ALL CONCRETE SHALL HAVE A MINIMUM COMPRESSIVE STRENGTH OF 3,000 PSI (28-DAY STRENGTH), UNLESS OTHERWISE NOTED ON DRAWINGS.
24. NO SURFACING MATERIAL IS TO BE APPLIED TO ANY MANHOLE COVERS, FRAMES, VALVE BOXES, GAS DROPS, ETC. ALL EXISTING AND PROPOSED UTILITY AND STORM SEWER STRUCTURES WHOSE TOPS WILL BE EXPOSED WITHIN ANY PAVED AREA SHALL BE ADJUSTED SO THAT THE TOP SURFACE OF COVERS OR FRAMES SHALL BE FLUSH WITH THE PAVEMENT SURFACE.
25. MATERIALS INTERFERING WITH CONSTRUCTION SHALL BE DISPOSED OF AS DIRECTED BY THE CITY'S ENGINEERING REPRESENTATIVE, UNLESS OTHERWISE NOTED ON PLANS.
26. ALL EXCESS SOIL RESULTING FROM CONSTRUCTION ACTIVITIES THAT IS NOT CLAIMED BY THE OWNER SHALL BECOME THE PROPERTY OF THE CONTRACTOR AND DISPOSED OF BY THE CONTRACTOR.
27. ALL DISTURBED LANDSCAPED AND/OR GRASSED AREAS SHALL BE RESTORED UNIFORMLY AND BE GENERALLY AT THE SAME ELEVATION AS EXISTING GRADES.
28. ALL DISTURBED AREAS SHALL BE REPLACED WITHIN FIFTEEN (15) DAYS TO A CONDITION EQUAL TO OR BETTER THAN EXISTING CONDITIONS.
29. ALL VOIDS AFTER PLACEMENT OF SOD SHALL BE FILLED WITH PREPARED SOIL MIX. THE SOD SHALL BE ROLLED TO MEET THE PROPOSED GRADES. SOD PLACED ON SLOPES 3:1 OR STEEPER SHALL BE PEGGED.
30. AREAS OF EXPOSED EARTH RESULTING FROM CONSTRUCTION SHALL BE SODDED IN KIND AS DIRECTED BY THE CITY'S ENGINEERING REPRESENTATIVE UNLESS OTHERWISE NOTED ON PLANS.
31. THE CONTRACTOR SHALL MAINTAIN AN ACCURATE SET OF MARKED-UP DRAWINGS (AS-BUILTS) AT THE CONSTRUCTION SITE.
32. A CCTV INSPECTION OF THE NEW SEWER SYSTEM IN DIGITAL FORMAT UTILIZING THE INDUSTRY STANDARD PIPELINE ASSESSMENT AND CERTIFICATION PROGRAM (PACP) CODING SYSTEM SHALL BE PROVIDED TO THE CITY. THE VIDEO SHALL BE TAKEN PRIOR TO PLACING THE NEW SEWER SYSTEM INTO SERVICE. DATA WILL BE COLLECTED UTILIZING CUES GRANITE SOFTWARE.
33. INSTALLATION OF GRAVITY SEWER PIPE SHALL BE IN CONFORMANCE WITH RECOMMENDED PRACTICES CONTAINED IN STANDARD PRACTICE FOR UNDERGROUND INSTALLATION OF THERMOPLASTIC PIPE FOR SEWERS AND OTHER GRAVITY-FLOW APPLICATIONS ASTM D2321. CONNECTIONS TO MANHOLES WITH SANITARY PIPE SHALL USE A JOINT TWO (2) FEET IN LENGTH AND SHALL USE AN APPROVED WATER STOP AROUND PIPE JOINT ENTRY.
34. THE BOTTOM TRENCH WIDTH IN AN UNSUPPORTED TRENCH SHALL BE LIMITED TO THE MINIMUM PRACTICABLE WIDTH ALLOWING WORKING SPACE TO PLACE AND COMPACT THE HAUNCHING MATERIAL. THE USE OF TRENCH BOXES AND MOVABLE SHEETING SHALL BE PERFORMED IN SUCH A MANNER THAT REMOVAL, BACKFILL AND COMPACTION WILL NOT DISTURB COMPACTED HAUNCHING MATERIAL OR PIPE ALIGNMENT. DEWATERING OF THE TRENCH BOTTOM SHALL BE ACCOMPLISHED USING ADEQUATE MEANS TO ALLOW PREPARATION OF BEDDING, PLACEMENT OF THE HAUNCHING MATERIAL AND PIPE IN THE TRENCH WITHOUT STANDING WATER. DEWATERING SHALL CONTINUE UNTIL SUFFICIENT BACKFILL IS PLACED ABOVE THE PIPE TO PREVENT FLOTATION OR MISALIGNMENT.
35. THE CONTRACTOR SHALL DISPOSE OF ALL UNSUITABLE MATERIALS, CONSTRUCTION DEBRIS, AND OTHER WASTE MATERIALS OFFSITE IN ACCORDANCE WITH APPLICABLE REGULATORY AGENCY REQUIREMENTS AT THE CONTRACTOR'S EXPENSE. ALL BACKFILL SHALL BE FREE OF UNSUITABLE MATERIALS.
36. THE CONTRACTOR SHALL BE RESPONSIBLE FOR PROVIDING A HURRICANE PREPARATION PLAN TO THE CITY'S ENGINEERING REPRESENTATIVE FOR REVIEW AND APPROVAL PRIOR TO COMMENCING CONSTRUCTION ACTIVITIES.
37. ANY DAMAGE TO CITY, COUNTY, OR STATE ROADS CAUSED BY THE CONTRACTOR SHALL BE REPAIRED BY THE CONTRACTOR IN A TIMELY MANNER AND TO THE SATISFACTION OF THE CITY'S ENGINEERING REPRESENTATIVE. PAYMENT SHALL NOT BE MADE FOR THIS WORK.
38. THE CONTRACTOR SHALL PROTECT PRIVATE PROPERTY.
39. BASE DRAWING INFORMATION WAS OBTAINED FROM THE CITY OF CLEARWATER NORTHEAST WASTEWATER TREATMENT PLANT RECORD AND SHOP DRAWINGS. THE CONTRACTOR IS RESPONSIBLE FOR VERIFYING THE LOCATION AND THE ELEVATION OF ALL YARD PIPING, GRADE ELEVATIONS, ELECTRICAL FACILITIES AND ALL ASSOCIATED SYSTEMS STRUCTURES AND EQUIPMENT PRIOR TO BIDDING.
40. ALL BACKGROUND DRAWINGS WERE PROVIDED FROM PDF/TIFF FILES FURNISHED BY THE CITY OF CLEARWATER. SCALES ARE FOR REFERENCE PURPOSES ONLY. CONTRACTOR IS TO FIELD VERIFY ALL DIMENSIONS AND ELEVATIONS PRIOR TO ORDERING ANY MATERIALS OR EQUIPMENT.
41. ALL WORK SHALL CONFORM TO THE CURRENT CITY OF CLEARWATER CONSTRUCTION STANDARDS WHICH ARE AVAILABLE AT WWW.MYCLEARWATER.COM.
42. SEE FDEP OPERATING PERMIT FOR FLOW METER & DISCHARGE LOCATION DESIGNATIONS.
43. ALL MJ PIPE, MJ FITTINGS AND PRESSURE PIPES SHALL BE RESTRAINED.

SURVEY NOTES

1. SITE VERTICAL DATUM BASED ON RECORD DRAWING PROVIDED FOR (2) SHEET NO. 115 OF 166. FINISHED FLOOR ELEVATION OF INFLUENT BUILDING=71.25 FEET.

TREE PROTECTION

1. THE CONTRACTOR WILL BE RESPONSIBLE FOR ADHERING TO ALL TREE PROTECTION MEASURES REQUIRED BY THE CITY OF CLEARWATER CODES, ORDINANCES AND STANDARD SPECIFICATIONS. THIS WILL INCLUDE ALL TREE BARRICADES, ROOT PRUNING AND TREE TRIMMING/PRUNING ACTIVITIES. THESE REQUIREMENTS WILL APPLY WITHIN THE SPECIFIED "LIMITS OF WORK" AND WILL ALSO BE APPLICABLE IN ALL AREAS WHERE THE CONTRACTOR AND/OR HIS SUBCONTRACTORS STAGE, STORE OR PARK VEHICLES, EQUIPMENT, MATERIALS AND DEBRIS.
2. ALL TREE PRUNING AND/OR ROOT PRUNING ON EXISTING TREES TO BE PRESERVED WILL ONLY BE PERFORMED BY OR UNDER THE DIRECT SUPERVISION OF AN INTERNATIONAL SOCIETY OF ARBORICULTURE (ISA) CERTIFIED ARBORIST. FURTHERMORE, ALL TREE WORK SHALL CONFORM TO THE AMERICAN NATIONAL STANDARDS INSTITUTE (ANSI) 2001, AMERICAN NATIONAL STANDARD FOR TREE CARE OPERATIONS – TREE, SHRUB AND OTHER WOODY PLANT MAINTENANCE – STANDARD PRACTICES (PRUNING) ANSI A-300.
3. WHERE CALLED FOR ON THE PLANS, INSTALL TREE BARRICADES, EROSION CONTROL/SILT FENCING OR OTHER APPROVED PROTECTIVE BARRIERS AROUND ALL TREES TO BE PRESERVED, PER CITY STANDARD DETAIL. WHERE APPLICABLE, AND SPECIFICALLY APPROVED BY THE CITY'S ENGINEERING REPRESENTATIVE PROTECTIVE BARRIERS MAY BE PLACED IN ROOT PRUNE TRENCHES.
4. PRIOR TO ANY FIELD CHANGES TAKING PLACE, IT WILL BE THE CONTRACTOR'S RESPONSIBILITY TO REVIEW THE POTENTIAL IMPACTS TO EXISTING TREES WITH HIS CERTIFIED ARBORIST, AND INCLUDE ANY AND ALL RECOMMENDED TREE PROTECTION MEASURES IN HIS PROPOSAL TO MODIFY THE APPROVED DESIGN. THE CITY'S ENGINEERING REPRESENTATIVE MUST APPROVE, IN WRITING, ANY CHANGES TO THE APPROVED DESIGN PRIOR TO IMPLEMENTATION OF SAID CHANGE.
5. THE CONTRACTOR WILL AVOID ANY OPEN EXCAVATIONS, FILL OR OTHER CONSTRUCTION ACTIVITIES WHENEVER POSSIBLE WITHIN THE "CRITICAL ROOT ZONE" OF ANY EXISTING TREE (I.E., UNDER THE DRIP LINE/CANOPY).
6. NO VEHICLES, EQUIPMENT OR MATERIALS SHALL BE PARKED OR STORED UNDER/WITHIN THE DRIP LINE/PROTECTIVE BARRIER AREA OF ANY TREE.
7. WHERE CONSTRUCTION ACTIVITIES ARE ANTICIPATED TO LAST FOR AN EXTENDED PERIOD OF TIME NEAR EXISTING TREES, THE CONTRACTOR SHALL INSTALL AND MAINTAIN CITY APPROVED TREE BARRICADES AS SHOWN IN THE STANDARD DETAILS AND AS APPROVED BY THE CITY'S ENGINEERING REPRESENTATIVE.
8. WOODCHIPS, MULCH OR ANOTHER CUSHIONING SURFACE MATERIAL APPROVED BY THE CITY'S ENGINEERING REPRESENTATIVE SHALL BE PLACED TO A MINIMUM DEPTH OF TEN (10) INCHES OVER AREAS WHERE ROOTS ARE PRESENT AND CONSTRUCTION TRAFFIC OCCURS.
9. ALL TREE PROTECTION MEASURES SHALL REMAIN IN PLACE AT ALL TIMES DURING CONSTRUCTION UNTIL THE CITY'S ENGINEERING REPRESENTATIVE AUTHORIZES REMOVAL.
10. THE CONTRACTOR WILL COORDINATE WITH THE CITY'S ENGINEERING REPRESENTATIVE, TIM KURTZ, AT (727) 562-4737, TO OBTAIN APPROVAL IN ADVANCE OF ANY AND ALL WORK WITHIN THE CRITICAL ROOT ZONE OF ANY EXISTING TREE.

SEDIMENT & EROSION CONTROL

1. IT IS THE RESPONSIBILITY OF THE CONTRACTOR TO CONTROL AND PREVENT EROSION AND THE TRANSPORTATION OF SEDIMENT TO SURFACE DRAINS AND OUTFALLS.
2. THE CONTRACTOR SHALL PREPARE AND SUBMIT A STORMWATER POLLUTION PREVENTION PLAN (SWPPP) IN ACCORDANCE WITH FLORIDA DEPARTMENT OF ENVIRONMENTAL PROTECTION (FDEP) CRITERIA FOR A NATIONAL POLLUTION DISCHARGE ELIMINATION SYSTEM (NPDES) ACTIVITIES PERMIT.
3. THE CONTRACTOR MUST OBTAIN A FDEP GENERIC PERMIT FOR THE DISCHARGE OF PRODUCED GROUND WATER, IF DEWATERING WITH OFFSITE DISCHARGE WILL BE REQUIRED. THE CONTRACTOR IS RESPONSIBLE FOR ALL REQUIRED PRELIMINARY WATER SAMPLES TO SATISFY THE FDEP GENERIC PERMIT FOR THE DISCHARGE OF PRODUCED GROUND WATER. SAMPLING SHALL OCCUR THIRTY (30) DAYS PRIOR TO THE START OF DEWATERING.
4. CONSTRUCTION OPERATIONS SHALL BE CARRIED OUT IN SUCH A MANNER THAT EROSION AND POLLUTION SHALL BE MINIMIZED. THE SUBMITTED SWPPP SHALL BE COMPLIED WITH. ALL APPLICABLE FEDERAL, STATE, AND LOCAL LAWS SHALL BE COMPLIED WITH AT ALL TIMES. PLEASE NOTE THAT NO HAY BALES ARE ALLOWED ON CITY OF CLEARWATER PROJECTS.

ROOT PRUNING

1. ROOT PRUNING SHALL ONLY BE PERFORMED BY OR UNDER THE DIRECT SUPERVISION OF AN INTERNATIONAL SOCIETY OF ARBORICULTURE (ISA) CERTIFIED ARBORIST.
2. ANY PROPOSED ROOT PRUNING TRENCHES SHALL BE IDENTIFIED (I.E., STAKED OR PAINTED) ON SITE, INSPECTED AND APPROVED BY THE CITY'S ENGINEERING REPRESENTATIVE PRIOR TO ACTUAL ROOT PRUNING.
3. ROOT PRUNING SHALL BE PERFORMED AS FAR IN ADVANCE OF OTHER CONSTRUCTION ACTIVITIES AS IS FEASIBLE, BUT AT A MINIMUM SHALL BE PERFORMED PRIOR TO ANY IMPACTS TO THE SOIL. ASSOCIATED TREE PROTECTION MEASURES SHOULD BE IMPLEMENTED UPON COMPLETION OF SAID ROOT PRUNING.
4. IF THERE IS A LIKELIHOOD OF EXCESSIVE WIND AND/OR RAIN, EXCEPTIONAL CARE SHALL BE TAKEN ON ANY ROOT PRUNING ACTIVITIES.
5. ROOT PRUNING SHALL BE LIMITED TO A MINIMUM OF TWELVE INCHES PER ONE INCH TRUNK DIAMETER FROM THE TREE BASE. ANY EXCEPTION MUST BE APPROVED BY THE CITY'S ENGINEERING REPRESENTATIVE PRIOR TO SAID ROOT PRUNING.
6. ROOTS SHALL BE CUT CLEANLY, AS FAR FROM THE TRUNK OF THE TREE AS POSSIBLE. ROOT PRUNING SHALL BE DONE TO A MINIMUM DEPTH OF EIGHTEEN (18) INCHES FROM EXISTING GRADE, OR TO THE DEPTH OF THE DISTURBANCE IF LESS THAN EIGHTEEN (18) INCHES.
7. ROOT PRUNING SHALL BE PERFORMED USING A ROOT CUTTING MACHINE DESIGNED SPECIFICALLY FOR THIS PURPOSE. ALTERNATE EQUIPMENT OR TECHNIQUES MUST BE APPROVED BY THE CITY'S ENGINEERING REPRESENTATIVE, PRIOR TO ANY WORK ADJACENT TO TREES TO BE PRESERVED.
8. ROOT PRUNING SHALL BE COMPLETED, INSPECTED AND ACCEPTED PRIOR TO THE COMMENCEMENT OF ANY EXCAVATION OR OTHER IMPACTS TO THE CRITICAL ROOT ZONES OF TREES TO BE PROTECTED.
9. EXCAVATIONS IN AN AREA WHERE ROOT ARE PRESENT SHALL NOT CAUSE THE TEARING OR RIPPING OF TREE ROOTS. ROOTS MUST FIRST BE CLEANLY SEVERED PRIOR TO CONTINUING WITH THE EXCAVATION, OR TUNNELED AROUND TO PREVENT DAMAGE TO THE ROOT.
10. TREE ROOTS SHALL NOT BE EXPOSED TO DRYING OUT. ROOT ENDS SHALL BE COVERED WITH NATIVE SOIL OR BURLAP AND KEPT MOIST UNTIL FINAL BACKFILL OR FINAL GRADES HAVE BEEN ESTABLISHED.
11. WHEN DEEMED APPROPRIATE (E.G. DURING PERIODS OF DROUGHT) THE CITY REPRESENTATIVE MAY REQUIRE A TEMPORARY IRRIGATION SYSTEM BE UTILIZED IN THE REMAINING CRITICAL ROOT ZONES OF ROOT PRUNED TREES.

BID DOCUMENTS

IF THIS BAR DOES NOT MEASURE 1" THEN DRAWING HAS BEEN REDUCED SCALE ACCORDINGLY
0 1"

King
ENGINEERING ASSOCIATES, INC.
4921 Memorial Highway
One Memorial Center, Suite 300
Tampa, Florida 33634
Phone 813 880-8881
Fax 813 880-8882
www.kingengineering.com
Engineering License #2610

© COPYRIGHT 2019 KING ENGINEERING ASSOCIATES, INC. DRAWINGS AND CONCEPTS MAY NOT BE USED OR REPRODUCED WITHOUT WRITTEN PERMISSION. CONSENT IS HEREBY GRANTED SPECIFICALLY TO GOVERNMENTAL AGENCIES TO REPRODUCE THIS DOCUMENT IN COMPLIANCE WITH F.S. CHAPTER 119.

RECORD DRAWINGS
SURVEYED BY: DRAWN BY:
REVIEWED BY: PROJECT ENGINEER DATE
APPROVED BY: ENGINEER DATE

REVISION	BY	DATE

CITY OF CLEARWATER, FLORIDA
ENGINEERING DEPARTMENT
100 S. MYRTLE AVE.
CLEARWATER, FL 33756

INVESTIGATE BEFORE YOU EXCAVATE
CALL 811
SUNSHINE STATE ONE CALL OF FLORIDA
www.callsunshine.com
(800) 432-4770
MIN. 48 HOURS BEFORE YOU EXCAVATE

NORTHEAST WRF GRIT REMOVAL, MOVING BELT FILTER AND EQUALIZATION SYSTEM IMPROVEMENTS

GENERAL NOTES AND ABBREVIATIONS

DWG NAME: _G1.01	FIELD BOOK:	SURVEYED BY:	SCALE: VERT. N/A
CONTRACT NO.: 15-0045-UT	DATE DRAWN: MARCH 2016	DRAWN BY: MJG	HORIZ. AS SHOWN
JOB NO.: 2110-210-002	DESIGNED BY: LVM	CHECKED BY: TAT	SHEET NO.: 3 of 117
APPROVED FOR CONSTRUCTION			

O:\ENV_ENG\2110\210\002\production\Drawings_G1.01.dwg, March 18, 2020 1:50 PM, King Engineering Associate Inc.

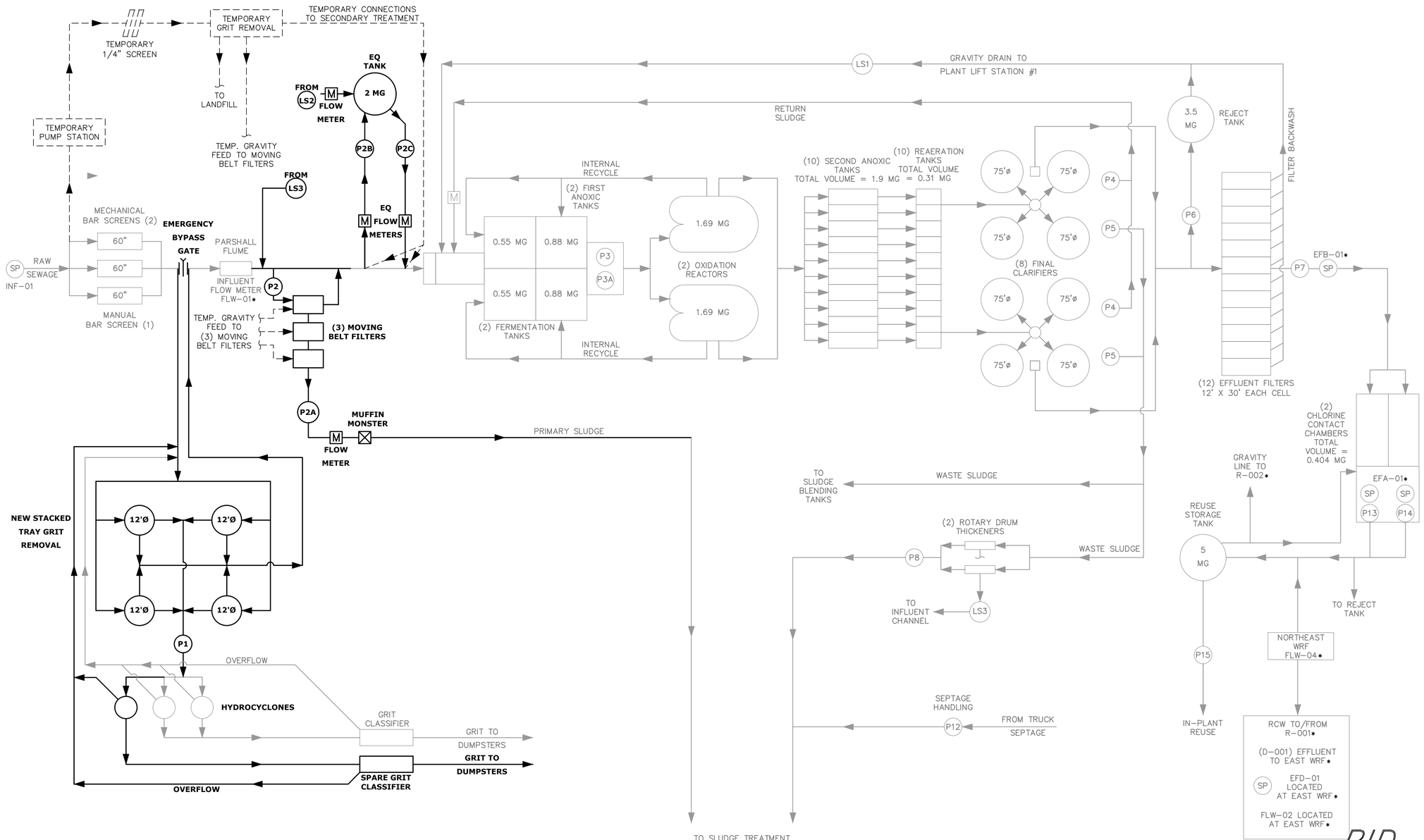

PUMP LEGEND

- P1 GRIT PUMPS - NEW (4)
- P2 MOVING BELT FILTER / PUMPS (3)
- P2A PRIMARY SLUDGE PUMPS (3)
- P2B EQUALIZATION TANK SUPPLY PUMPS (3)
- P2C EQUALIZATION TANK RETURN PUMPS (3)
- P3 SCREW PUMPS (5)
- P3A SUBMERSIBLE PUMPS (3)
- P4 RETURN SLUDGE PUMPS (4)
- P5 WASTE SLUDGE PUMPS (4)
- P6 FLOW EQUALIZATION PUMPS (3)
- P7 EFFLUENT PUMPS (3)
- P8 THICKENED WAS SLUDGE PUMPS (2)
- P9 BELT FILTER PRESS FEED PUMPS (4)
- P10 (MOYNO) DIGESTER TRANSFER PUMP (1)
- P11 SLUDGE OFF LOADING/TRANSFER PUMPS (2)
- P12 SEPTAGE PUMPS (2)
- P13 VERTICAL HIGH SERVICE REUSE PUMPS (3)
- P14 VERTICAL HIGH SERVICE REUSE PUMPS (3)
- P15 IN-PLANT REUSE PUMPS (3)
- P16 ROTARY LOBE HEAT EXCHANGER RECIRC. PUMPS (2)
- P17 ROTO-MIX MIXER PUMPS (2)
- LS2 IN-PLANT LS #2 PUMPS (2)
- LS3 IN-PLANT LS #3 PUMPS (2)

* SEE FDEP OPERATING PERMIT FOR DEFINITIONS

BID DOCUMENTS

IF THIS BAR DOES NOT MEASURE 1" THEN DRAWING HAS BEEN REDUCED SCALE ACCORDINGLY

King
ENGINEERING ASSOCIATES, INC.
4921 Memorial Highway
One Memorial Center, Suite 300
Tampa, Florida 33634
Phone 813 880-8881
Fax 813 880-8882
www.kingengineering.com
Engineering License #2610

© COPYRIGHT 2010 KING ENGINEERING ASSOCIATES, INC. DRAWINGS AND CONCEPTS MAY NOT BE USED OR REPRODUCED WITHOUT WRITTEN PERMISSION CONSENT IS HEREBY GRANTED SPECIFICALLY TO GOVERNMENTAL AGENCIES TO REPRODUCE THIS DOCUMENT IN COMPLIANCE WITH F.S. CHAPTER 119.

O:\ENV_ENG\2110\210\002\production\Drawings\GEN-INSTR.dwg, March 18, 2020 1:50 PM, King Engineering Associate Inc.

RECORD DRAWINGS

SURVEYED BY: | DRAWN BY:
REVIEWED BY: PROJECT ENGINEER | DATE
APPROVED BY: ENGINEER | DATE

REVISION	BY	DATE

CITY OF CLEARWATER, FLORIDA
ENGINEERING DEPARTMENT
100 S. MYRTLE AVE.
CLEARWATER, FL 33756

INVESTIGATE BEFORE YOU EXCAVATE
CALL 811
SUNSHINE STATE ONE CALL OF FLORIDA
www.callsunshine.com
(800) 432-4770
MIN. 48 HOURS BEFORE YOU EXCAVATE

NORTHEAST WRF GRIT REMOVAL, MOVING BELT FILTER AND EQUALIZATION SYSTEM IMPROVEMENTS

NORTHEAST WRF PROCESS FLOW DIAGRAM

DWG NAME: GEN-INSTR	FIELD BOOK:	SURVEYED BY:	SCALE: VERT. N/A
CONTRACT NO.: 15-0045-UT	DATE DRAWN: MARCH 2016	DRAWN BY: MJG	HORIZ. AS SHOWN
JOB NO.: 2110-210-002	DESIGNED BY: LVM	CHECKED BY: TAT	SHEET NO.: 4 of 117

APPROVED FOR CONSTRUCTION

G1.03

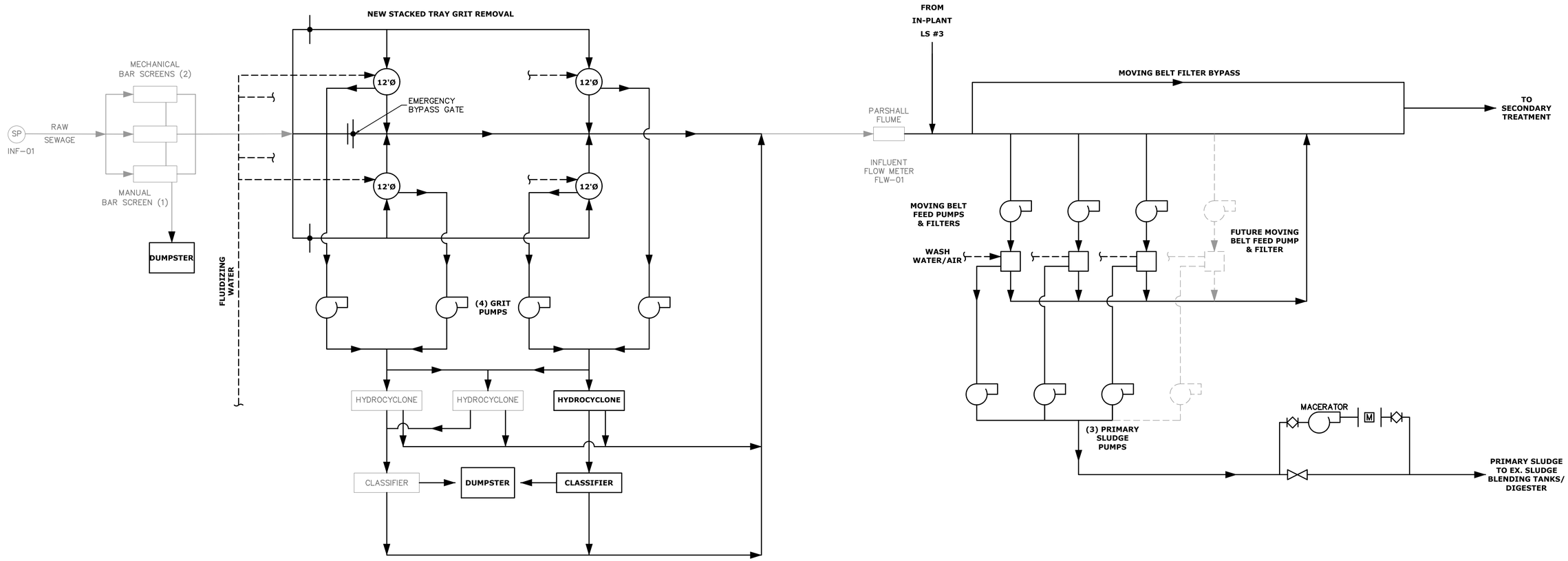

BID DOCUMENTS

IF THIS BAR DOES NOT MEASURE 1" THEN DRAWING HAS BEEN REDUCED SCALE ACCORDINGLY

0 1"

King
ENGINEERING ASSOCIATES, INC.
4921 Memorial Highway
One Memorial Center, Suite 300
Tampa, Florida 33634
Phone 813 880-8881
Fax 813 880-8882
www.kingengineering.com
Engineering License #2610

© COPYRIGHT 2010 KING ENGINEERING ASSOCIATES, INC. DRAWINGS AND CONCEPTS MAY NOT BE USED OR REPRODUCED WITHOUT WRITTEN PERMISSION. CONSENT IS HEREBY GRANTED SPECIFICALLY TO GOVERNMENTAL AGENCIES TO REPRODUCE THIS DOCUMENT IN COMPLIANCE WITH F.S. CHAPTER 119.

O:\ENV_ENG\2110\210\002\production\Drawings\GEN-INSTR.dwg, March 18, 2020 1:50 PM, King Engineering Associate Inc.

RECORD DRAWINGS

SURVEYED BY: DRAWN BY:

REVIEWED BY: PROJECT ENGINEER DATE

APPROVED BY: ENGINEER DATE

REVISION	BY	DATE

CITY OF CLEARWATER, FLORIDA
ENGINEERING DEPARTMENT
100 S. MYRTLE AVE.
CLEARWATER, FL 33756

INVESTIGATE BEFORE YOU EXCAVATE
CALL 811
SUNSHINE STATE ONE CALL OF FLORIDA
www.callsunshine.com
(800) 432-4770
MIN. 48 HOURS BEFORE YOU EXCAVATE

NORTHEAST WRF GRIT REMOVAL, MOVING BELT FILTER AND EQUALIZATION SYSTEM IMPROVEMENTS

HEADWORKS PROCESS FLOW DIAGRAM

DWG NAME: GEN–INSTR	FIELD BOOK:	SURVEYED BY:	SCALE: VERT. N/A
CONTRACT NO.: 15–0045–UT	DATE DRAWN: MARCH 2016	DRAWN BY: MJG	HORIZ. AS SHOWN
JOB NO.: 2110–210–002	DESIGNED BY: LVM	CHECKED BY: TAT	SHEET NO.: 5 of 117

APPROVED FOR CONSTRUCTION

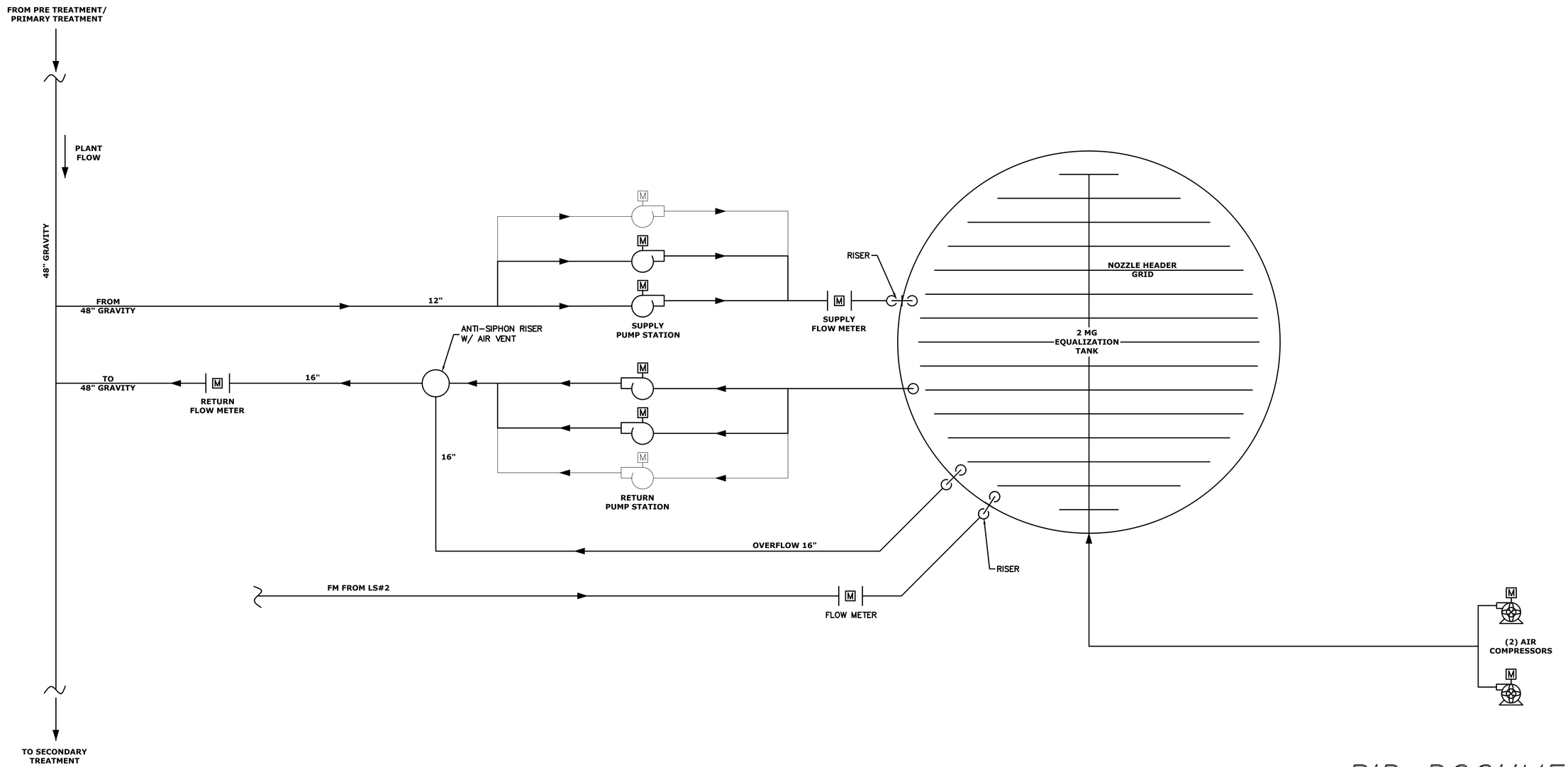

BID DOCUMENTS

IF THIS BAR DOES NOT MEASURE 1" THEN DRAWING HAS BEEN REDUCED SCALE ACCORDINGLY 0 1"

King
ENGINEERING ASSOCIATES, INC.
4921 Memorial Highway
One Memorial Center, Suite 300
Tampa, Florida 33634
Phone 813 880-8881
Fax 813 880-8882
www.kingengineering.com
Engineering License #2610

© COPYRIGHT 2013 KING ENGINEERING ASSOCIATES, INC. DRAWINGS AND CONCEPTS MAY NOT BE USED OR REPRODUCED WITHOUT WRITTEN PERMISSION CONSENT IS HEREBY GRANTED SPECIFICALLY TO GOVERNMENTAL AGENCIES TO REPRODUCE THIS DOCUMENT IN COMPLIANCE WITH F.S. CHAPTER 119.

RECORD DRAWINGS

SURVEYED BY: DRAWN BY:

REVIEWED BY: PROJECT ENGINEER DATE

APPROVED BY: ENGINEER DATE

REVISION	BY	DATE

CITY OF CLEARWATER, FLORIDA
ENGINEERING DEPARTMENT
100 S. MYRTLE AVE.
CLEARWATER, FL 33756

INVESTIGATE BEFORE YOU EXCAVATE
CALL 811
SUNSHINE STATE ONE CALL OF FLORIDA
www.callsunshine.com
(800) 432-4770
MIN. 48 HOURS BEFORE YOU EXCAVATE

NORTHEAST WRF GRIT REMOVAL, MOVING BELT FILTER AND EQUALIZATION SYSTEM IMPROVEMENTS

EQUALIZATION TANK PROCESS FLOW DIAGRAM

DWG NAME: GEN-INSTR	FIELD BOOK:	SURVEYED BY:	SCALE: VERT. N/A
CONTRACT NO.: 15-0045-UT	DATE DRAWN: MARCH 2016	DRAWN BY: MJG	HORIZ. AS SHOWN
JOB NO.: 2110-210-002	DESIGNED BY: LVM	CHECKED BY: TAT	SHEET NO.: 6 of 117

APPROVED FOR CONSTRUCTION

O:\ENV_ENG\2110\210\002\production\Drawings\GEN-INSTR.dwg, March 18, 2020 1:50 PM, King Engineering Associate Inc.

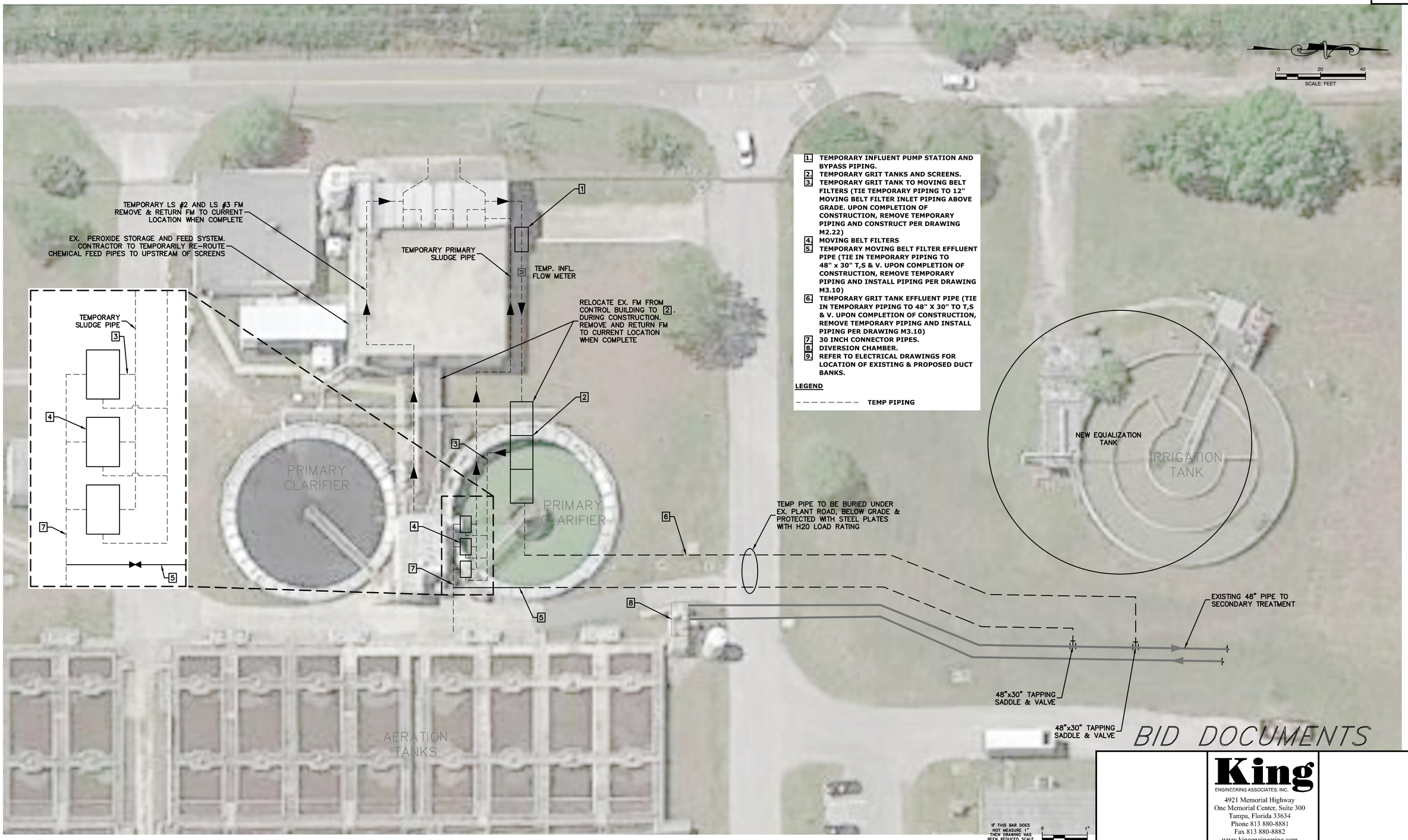

1. TEMPORARY INFLUENT PUMP STATION AND BYPASS PIPING.
2. TEMPORARY GRIT TANKS AND SCREENS.
3. TEMPORARY GRIT TANK TO MOVING BELT FILTERS (TIE TEMPORARY PIPING TO 12" MOVING BELT FILTER INLET PIPING ABOVE GRADE. UPON COMPLETION OF CONSTRUCTION, REMOVE TEMPORARY PIPING AND CONSTRUCT PER DRAWING M2.22)
4. MOVING BELT FILTERS
5. TEMPORARY MOVING BELT FILTER EFFLUENT PIPE (TIE IN TEMPORARY PIPING TO 48" x 30" T,S & V. UPON COMPLETION OF CONSTRUCTION, REMOVE TEMPORARY PIPING AND INSTALL PIPING PER DRAWING M3.10)
6. TEMPORARY GRIT TANK EFFLUENT PIPE (TIE IN TEMPORARY PIPING TO 48" X 30" TO T,S & V. UPON COMPLETION OF CONSTRUCTION, REMOVE TEMPORARY PIPING AND INSTALL PIPING PER DRAWING M3.10)
7. 30 INCH CONNECTOR PIPES.
8. DIVERSION CHAMBER.
9. REFER TO ELECTRICAL DRAWINGS FOR LOCATION OF EXISTING & PROPOSED DUCT BANKS.

LEGEND

- - - - - - - - TEMP PIPING

BID DOCUMENTS

King
ENGINEERING ASSOCIATES, INC.
4921 Memorial Highway
One Memorial Center, Suite 300
Tampa, Florida 33634
Phone 813 880-8881
Fax 813 880-8882
www.kingengineering.com
Engineering License #2610

© COPYRIGHT 2010 KING ENGINEERING ASSOCIATES, INC. DRAWINGS AND CONCEPTS MAY NOT BE USED OR REPRODUCED WITHOUT WRITTEN PERMISSION. CONSENT IS HEREBY GRANTED SPECIFICALLY TO GOVERNMENTAL AGENCIES TO REPRODUCE THIS DOCUMENT IN COMPLIANCE WITH F.S. CHAPTER 119.

RECORD DRAWINGS
SURVEYED BY: DRAWN BY:
REVIEWED BY: PROJECT ENGINEER DATE
APPROVED BY: ENGINEER DATE

REVISION	BY	DATE

CITY OF CLEARWATER, FLORIDA
ENGINEERING DEPARTMENT
100 S. MYRTLE AVE.
CLEARWATER, FL 33756

INVESTIGATE BEFORE YOU EXCAVATE
CALL 811
SUNSHINE STATE ONE CALL OF FLORIDA
www.callsunshine.com
(800) 432-4770
MIN. 48 HOURS BEFORE YOU EXCAVATE

NORTHEAST WRF GRIT REMOVAL, MOVING BELT FILTER AND EQUALIZATION SYSTEM IMPROVEMENTS

SEQUENCE OF CONSTRUCTION SITE PLAN

DWG NAME: GEN-INSTR	FIELD BOOK:	SURVEYED BY:	SCALE: VERT. N/A
CONTRACT NO.: 15-0045-UT	DATE DRAWN: MARCH 2016	DRAWN BY: CS	HORIZ. AS SHOWN
JOB NO.: 2110-210-002	DESIGNED BY: JEE	CHECKED BY: TAT	SHEET NO.: 7 of 117

APPROVED FOR CONSTRUCTION

O:\ENV_ENG\2110\210\002\production\Drawings\GEN-INSTR.dwg, March 18, 2020 1:51 PM, King Engineering Associate Inc.

G1.06

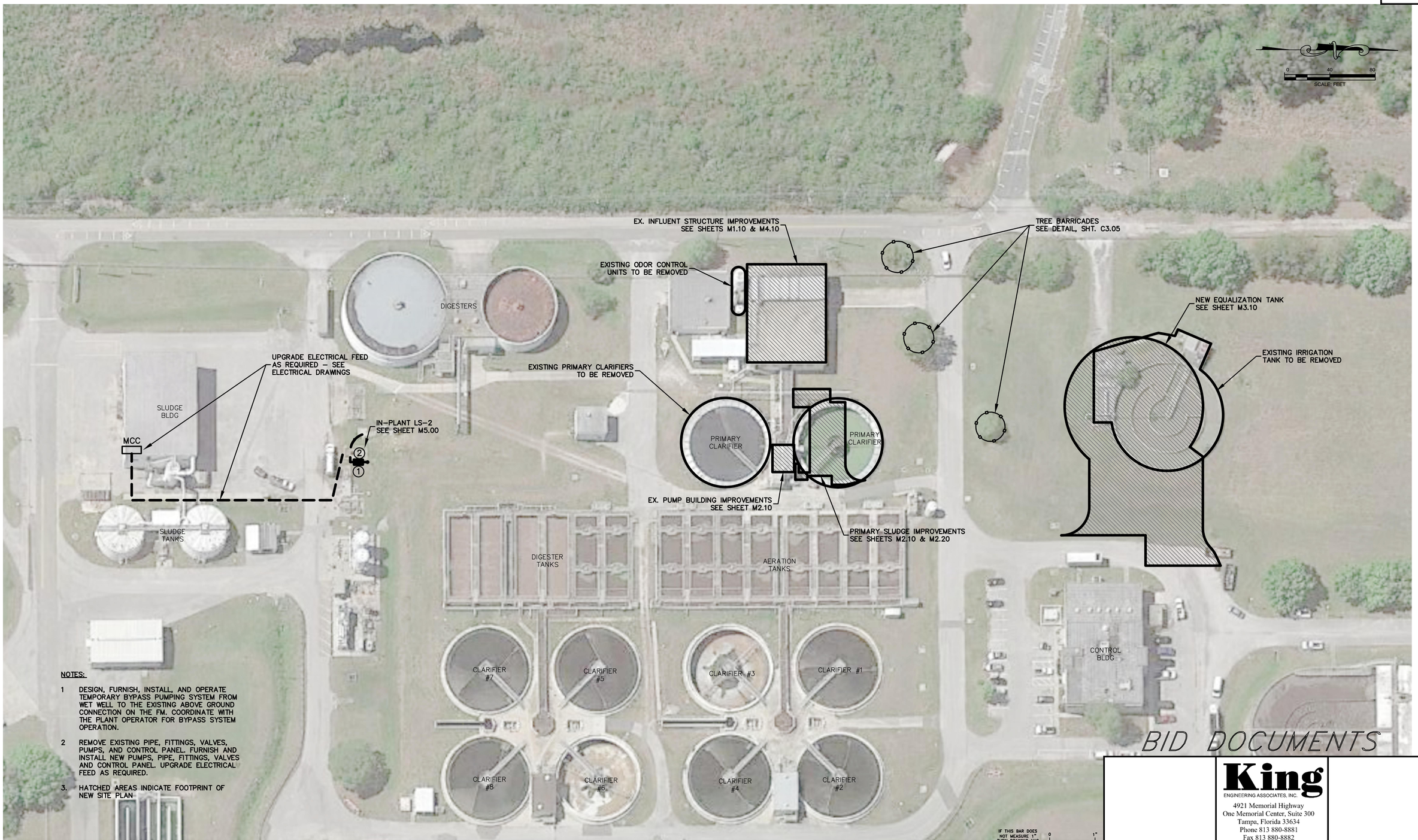

NOTES:

1 DESIGN, FURNISH, INSTALL, AND OPERATE TEMPORARY BYPASS PUMPING SYSTEM FROM WET WELL TO THE EXISTING ABOVE GROUND CONNECTION ON THE FM. COORDINATE WITH THE PLANT OPERATOR FOR BYPASS SYSTEM OPERATION.

2 REMOVE EXISTING PIPE, FITTINGS, VALVES, PUMPS, AND CONTROL PANEL. FURNISH AND INSTALL NEW PUMPS, PIPE, FITTINGS, VALVES AND CONTROL PANEL. UPGRADE ELECTRICAL FEED AS REQUIRED.

3. HATCHED AREAS INDICATE FOOTPRINT OF NEW SITE PLAN

King
ENGINEERING ASSOCIATES, INC.
4921 Memorial Highway
One Memorial Center, Suite 300
Tampa, Florida 33634
Phone 813 880-8881
Fax 813 880-8882
www.kingengineering.com
Engineering License #2610

© COPYRIGHT 2010 KING ENGINEERING ASSOCIATES, INC. DRAWINGS AND CONCEPTS MAY NOT BE USED OR REPRODUCED WITHOUT WRITTEN PERMISSION. CONSENT IS HEREBY GRANTED SPECIFICALLY TO GOVERNMENTAL AGENCIES TO REPRODUCE THIS DOCUMENT IN COMPLIANCE WITH F.S. CHAPTER 119.

O:\ENV_ENG\2110\2110\002\production\Drawings\G1.06.dwg, March 18, 2020 1:51 PM, King Engineering Associate Inc.

RECORD DRAWINGS

SURVEYED BY: | DRAWN BY:

REVIEWED BY:

PROJECT ENGINEER | DATE

APPROVED BY:

ENGINEER | DATE

REVISION	BY	DATE

CITY OF CLEARWATER, FLORIDA
ENGINEERING DEPARTMENT
100 S. MYRTLE AVE.
CLEARWATER, FL 33756

INVESTIGATE BEFORE YOU EXCAVATE
CALL 811
SUNSHINE STATE ONE CALL OF FLORIDA
www.callsunshine.com
(800) 432-4770
MIN. 48 HOURS BEFORE YOU EXCAVATE

NORTHEAST WRF GRIT REMOVAL, MOVING BELT FILTER AND EQUALIZATION SYSTEM IMPROVEMENTS

PROPOSED SITE PLAN

DWG NAME: G1.06	FIELD BOOK:	SURVEYED BY:	SCALE: VERT. N/A
CONTRACT NO.: 15-0045-UT	DATE DRAWN: MARCH 2016	DRAWN BY: CS	HORIZ. AS SHOWN
JOB NO.: 2110-210-002	DESIGNED BY: JEE	CHECKED BY: TAT	SHEET NO.: 8 of 117
APPROVED FOR CONSTRUCTION			

C1.00

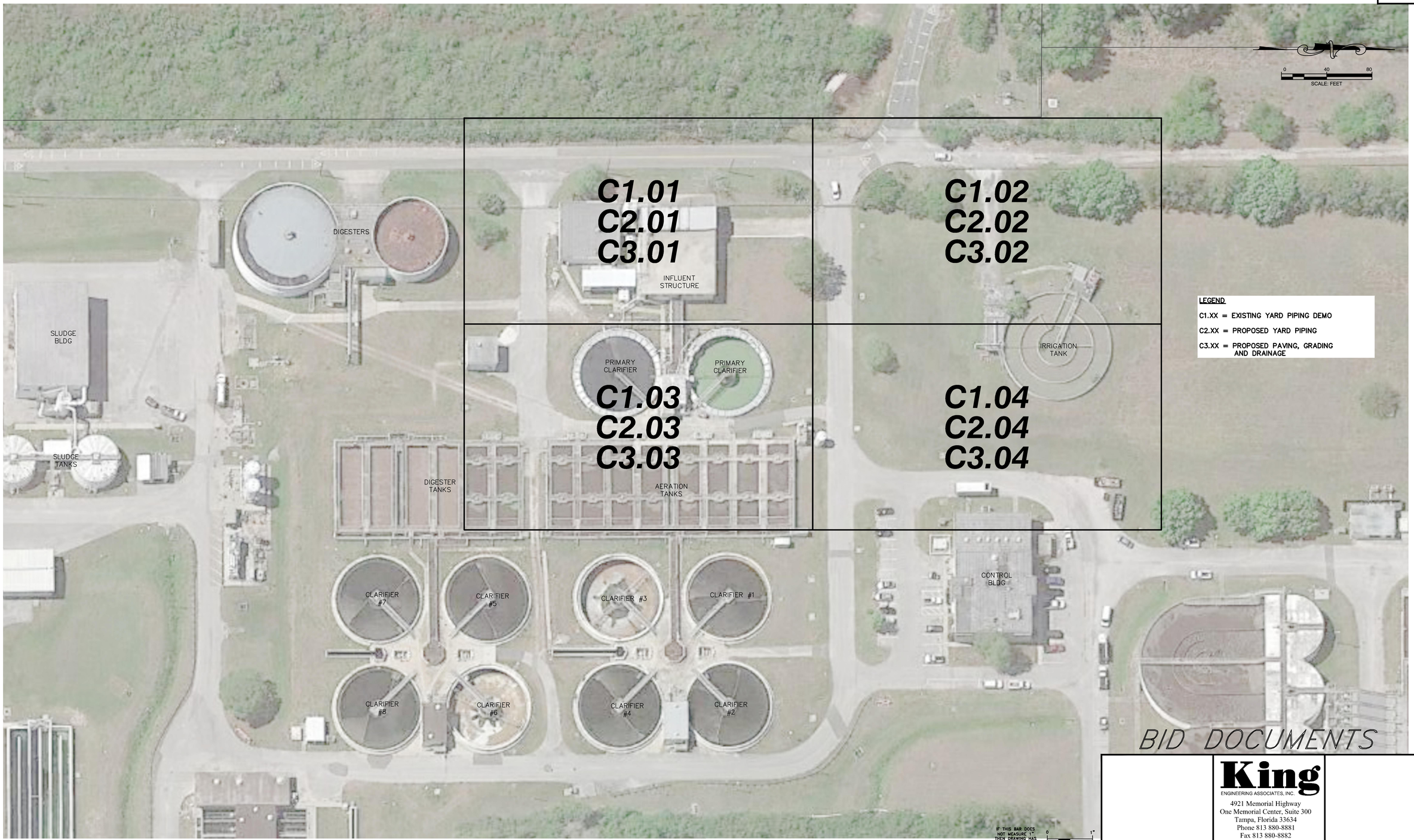

LEGEND

C1.XX = EXISTING YARD PIPING DEMO

C2.XX = PROPOSED YARD PIPING

C3.XX = PROPOSED PAVING, GRADING AND DRAINAGE

BID DOCUMENTS

King
ENGINEERING ASSOCIATES, INC.
4921 Memorial Highway
One Memorial Center, Suite 300
Tampa, Florida 33634
Phone 813 880-8881
Fax 813 880-8882
www.kingengineering.com
Engineering License #2610

© COPYRIGHT 2016 KING ENGINEERING ASSOCIATES, INC. DRAWINGS AND CONCEPTS MAY NOT BE USED OR REPRODUCED WITHOUT WRITTEN PERMISSION. CONSENT IS HEREBY GRANTED SPECIFICALLY TO GOVERNMENTAL AGENCIES TO REPRODUCE THIS DOCUMENT IN COMPLIANCE WITH F.S. CHAPTER 119.

RECORD DRAWINGS

SURVEYED BY: | DRAWN BY:

REVIEWED BY: PROJECT ENGINEER | DATE

APPROVED BY: ENGINEER | DATE

REVISION	BY	DATE

CITY OF CLEARWATER, FLORIDA
ENGINEERING DEPARTMENT
100 S. MYRTLE AVE.
CLEARWATER, FL 33756

INVESTIGATE BEFORE YOU EXCAVATE
CALL 811
SUNSHINE STATE ONE CALL OF FLORIDA
www.callsunshine.com
(800) 432-4770
MIN. 48 HOURS BEFORE YOU EXCAVATE

NORTHEAST WRF GRIT REMOVAL, MOVING BELT FILTER AND EQUALIZATION SYSTEM IMPROVEMENTS

OVERALL KEY MAP

DWG NAME: C1.00	FIELD BOOK:	SURVEYED BY:	SCALE: VERT. N/A
CONTRACT NO.: 15-0045-UT	DATE DRAWN: MARCH 2016	DRAWN BY: MJG	HORIZ. AS SHOWN
JOB NO.: 2110-210-002	DESIGNED BY: LVM	CHECKED BY: TAT	SHEET NO.: 9 of 117

APPROVED FOR CONSTRUCTION

O:\ENV_ENG\2110\210\002\production\Drawings\C1.00.dwg, March 18, 2020 1:55 PM, King Engineering Associate Inc.

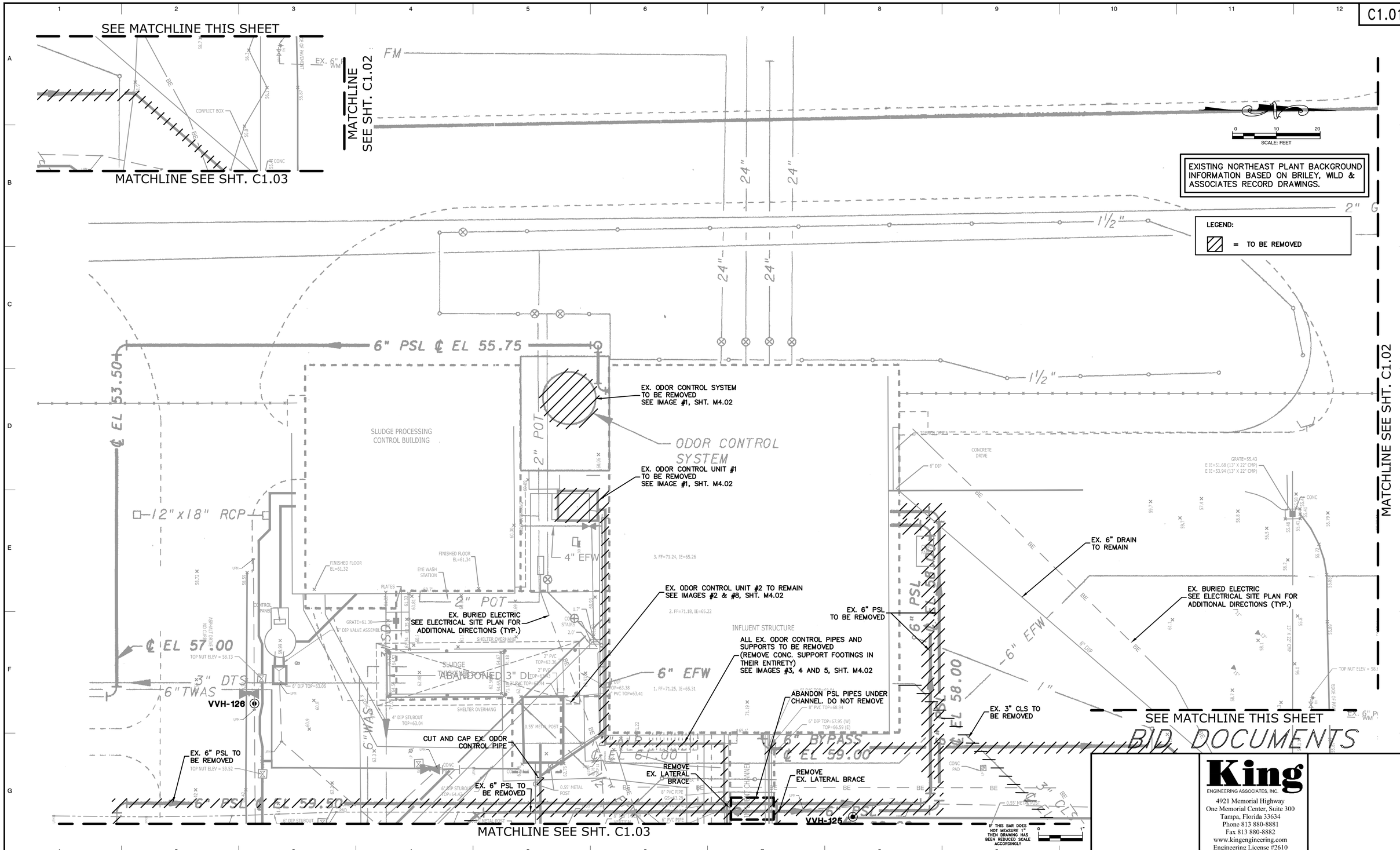

BID DOCUMENTS

King
ENGINEERING ASSOCIATES, INC.
4921 Memorial Highway
One Memorial Center, Suite 300
Tampa, Florida 33634
Phone 813 880-8881
Fax 813 880-8882
www.kingengineering.com
Engineering License #2610

© COPYRIGHT 2013 KING ENGINEERING ASSOCIATES, INC. DRAWINGS AND CONCEPTS MAY NOT BE USED OR REPRODUCED WITHOUT WRITTEN PERMISSION. CONSENT IS HEREBY GRANTED SPECIFICALLY TO GOVERNMENTAL AGENCIES TO REPRODUCE THIS DOCUMENT IN COMPLIANCE WITH F.S. CHAPTER 119.

RECORD DRAWINGS

SURVEYED BY: | DRAWN BY:
REVIEWED BY:
PROJECT ENGINEER | DATE
APPROVED BY:
ENGINEER | DATE

REVISION	BY	DATE

CITY OF CLEARWATER, FLORIDA
ENGINEERING DEPARTMENT
100 S. MYRTLE AVE.
CLEARWATER, FL 33756

INVESTIGATE BEFORE YOU EXCAVATE
CALL 811
SUNSHINE STATE ONE CALL OF FLORIDA
www.callsunshine.com
(800) 432-4770
MIN. 48 HOURS BEFORE YOU EXCAVATE

NORTHEAST WRF GRIT REMOVAL, MOVING BELT FILTER AND EQUALIZATION SYSTEM IMPROVEMENTS

EXISTING YARD PIPING DEMO PLAN (1)

DWG NAME: C1.01 – C1.04	FIELD BOOK:	SURVEYED BY:	SCALE: VERT. N/A
CONTRACT NO.: 15-0045-UT	DATE DRAWN: MARCH 2016	DRAWN BY: MJG	HORIZ. AS SHOWN
JOB NO.: 2110-210-002	DESIGNED BY: LVM	CHECKED BY: TAT	SHEET NO.: 10 of 117
APPROVED FOR CONSTRUCTION			

O:\ENV_ENG\2110\210\002\Production\Drawings\C1.01 - C1.04.dwg, March 26, 2020 2:43 PM, King Engineering Associate Inc.

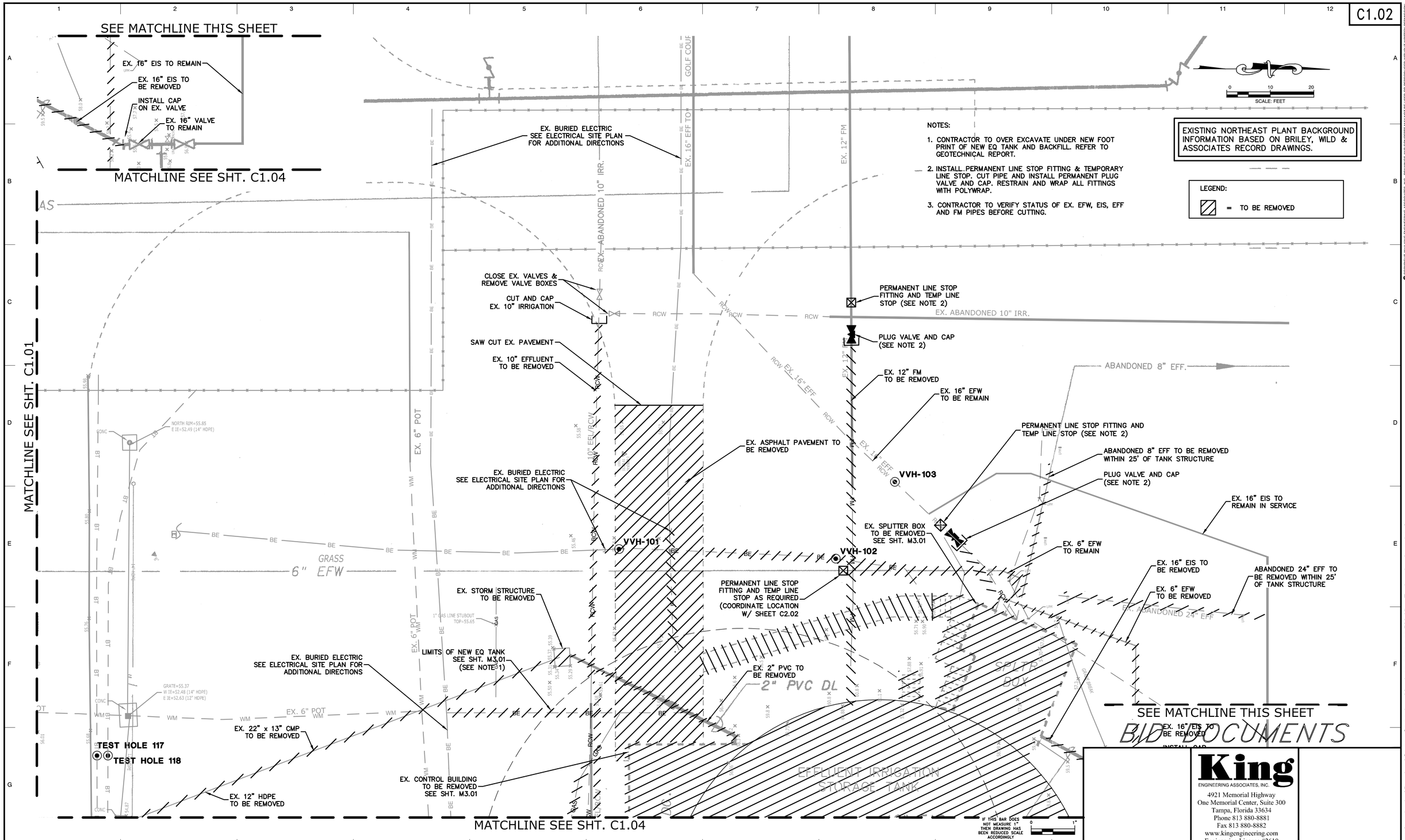

BID DOCUMENTS

King
ENGINEERING ASSOCIATES, INC.
4921 Memorial Highway
One Memorial Center, Suite 300
Tampa, Florida 33634
Phone 813 880-8881
Fax 813 880-8882
www.kingengineering.com
Engineering License #2610

© COPYRIGHT 2010 KING ENGINEERING ASSOCIATES, INC. DRAWINGS AND CONCEPTS MAY NOT BE USED OR REPRODUCED WITHOUT WRITTEN PERMISSION. CONSENT IS HEREBY GRANTED SPECIFICALLY TO GOVERNMENTAL AGENCIES TO REPRODUCE THIS DOCUMENT IN COMPLIANCE WITH F.S. CHAPTER 119.

RECORD DRAWINGS

SURVEYED BY:	DRAWN BY:
REVIEWED BY:	PROJECT ENGINEER / DATE
APPROVED BY:	ENGINEER / DATE

REVISION	BY	DATE

CITY OF CLEARWATER, FLORIDA
ENGINEERING DEPARTMENT
100 S. MYRTLE AVE.
CLEARWATER, FL 33756

INVESTIGATE BEFORE YOU EXCAVATE
CALL 811
SUNSHINE STATE ONE CALL OF FLORIDA
www.callsunshine.com
(800) 432-4770
MIN. 48 HOURS BEFORE YOU EXCAVATE

NORTHEAST WRF GRIT REMOVAL, MOVING BELT FILTER AND EQUALIZATION SYSTEM IMPROVEMENTS

EXISTING YARD PIPING DEMO PLAN (2)

DWG NAME: C1.01 – C1.04	FIELD BOOK:	SURVEYED BY:	SCALE: VERT. N/A
CONTRACT NO.: 15-0045-UT	DATE DRAWN: MARCH 2016	DRAWN BY: MJG	HORIZ. AS SHOWN
JOB NO.: 2110-210-002	DESIGNED BY: LVM	CHECKED BY: TAT	SHEET NO.: 11 of 117
APPROVED FOR CONSTRUCTION			

O:\ENV_ENG\2110\210\002\production\Drawings\C1.01 - C1.04.dwg, March 18, 2020 1:56 PM, King Engineering Associate Inc.

C1.03

MATCHLINE SEE SHT. C1.01

EX. ODOR CONTROL PIPES AND SUPPORTS TO BE REMOVED

EX. 6" PSL TO BE REMOVED

1975 ORIGINAL 8" BWR

EX. 6" PSL TO BE REMOVED

EX. 6" EFW TO BE RELOCATED

VVH-127

ALL EX. ODOR CONTROL PIPES AND SUPPORTS TO BE REMOVED (REMOVE CONC. SUPPORT FOOTINGS IN THEIR ENTIRETY) SEE IMAGES #3, 4 AND 5, SHT. M4.02

VVH-124

REMOVE AND REPLACE EX. STAIRS

EX. STAIRS TO BE REMOVED

EX. 6" PSL & SCUM PIPES TO BE CAPPED OUTSIDE OF BUILDING (TYP. 4)

VVH-128

EX. 6" SCUM TO BE CAPPED & REMOVED

EX .PRIMARY CLARIFIERS TO BE REMOVED SEE SHT. M2.01

EX. BURIED ELECTRIC SEE ELECTRICAL SITE PLAN FOR ADDITIONAL DIRECTIONS

CONTRACTOR TO REHABILITATE EXISTING CHANNEL TO SECONDARY TREATMENT, SEE STRUCTURAL DWGS

EX. ODOR CONTROL PIPES AND SUPPORTS TO BE REMOVED

LEGEND:

= TO BE REMOVED

VVH-129

EXISTING NORTHEAST PLANT BACKGROUND INFORMATION BASED ON BRILEY, WILD & ASSOCIATES RECORD DRAWINGS.

EX. BURIED ELECTRIC SEE ELECTRICAL SITE PLAN FOR ADDITIONAL DIRECTIONS

EX. 3" CLS TO BE REMOVED

CUT AND CAP EX. 3" CLS

VVH-119

VVH-120

VVH-122

VVH-121

EX. STORM WATER PIPE TO BE REMOVED AND REPLACED SEE SHT. C3.03

MATCHLINE SEE SHT. C1.04

BID DOCUMENTS

© COPYRIGHT 2010 KING ENGINEERING ASSOCIATES, INC. DRAWINGS AND CONCEPTS MAY NOT BE USED OR REPRODUCED WITHOUT WRITTEN PERMISSION. CONSENT IS HEREBY GRANTED SPECIFICALLY TO GOVERNMENTAL AGENCIES TO REPRODUCE THIS DOCUMENT IN COMPLIANCE WITH F.S. CHAPTER 119.

King
ENGINEERING ASSOCIATES, INC.
4921 Memorial Highway
One Memorial Center, Suite 300
Tampa, Florida 33634
Phone 813 880-8881
Fax 813 880-8882
www.kingengineering.com
Engineering License #2610

IF THIS BAR DOES NOT MEASURE 1" THEN DRAWING HAS BEEN REDUCED SCALE ACCORDINGLY

RECORD DRAWINGS

SURVEYED BY: | DRAWN BY:

REVIEWED BY: PROJECT ENGINEER DATE

APPROVED BY: ENGINEER DATE

REVISION	BY	DATE

CITY OF CLEARWATER, FLORIDA
ENGINEERING DEPARTMENT
100 S. MYRTLE AVE.
CLEARWATER, FL 33756

INVESTIGATE BEFORE YOU EXCAVATE
CALL 811
SUNSHINE STATE ONE CALL OF FLORIDA
www.callsunshine.com
(800) 432-4770
MIN. 48 HOURS BEFORE YOU EXCAVATE

NORTHEAST WRF GRIT REMOVAL, MOVING BELT FILTER AND EQUALIZATION SYSTEM IMPROVEMENTS

EXISTING YARD PIPING DEMO PLAN (3)

DWG NAME: C1.01 – C1.04	FIELD BOOK:	SURVEYED BY:	SCALE: VERT. N/A
CONTRACT NO.: 15–0045–UT	DATE DRAWN: MARCH 2016	DRAWN BY: MJG	HORIZ. AS SHOWN
JOB NO.: 2110–210–002	DESIGNED BY: LVM	CHECKED BY: TAT	SHEET NO.: 12 of 117
APPROVED FOR CONSTRUCTION			

O:\ENV_ENG\2110\210\002\Production\Drawings\C1.01 - C1.04.dwg, March 26, 2020 2:48 PM, King Engineering Associate Inc.

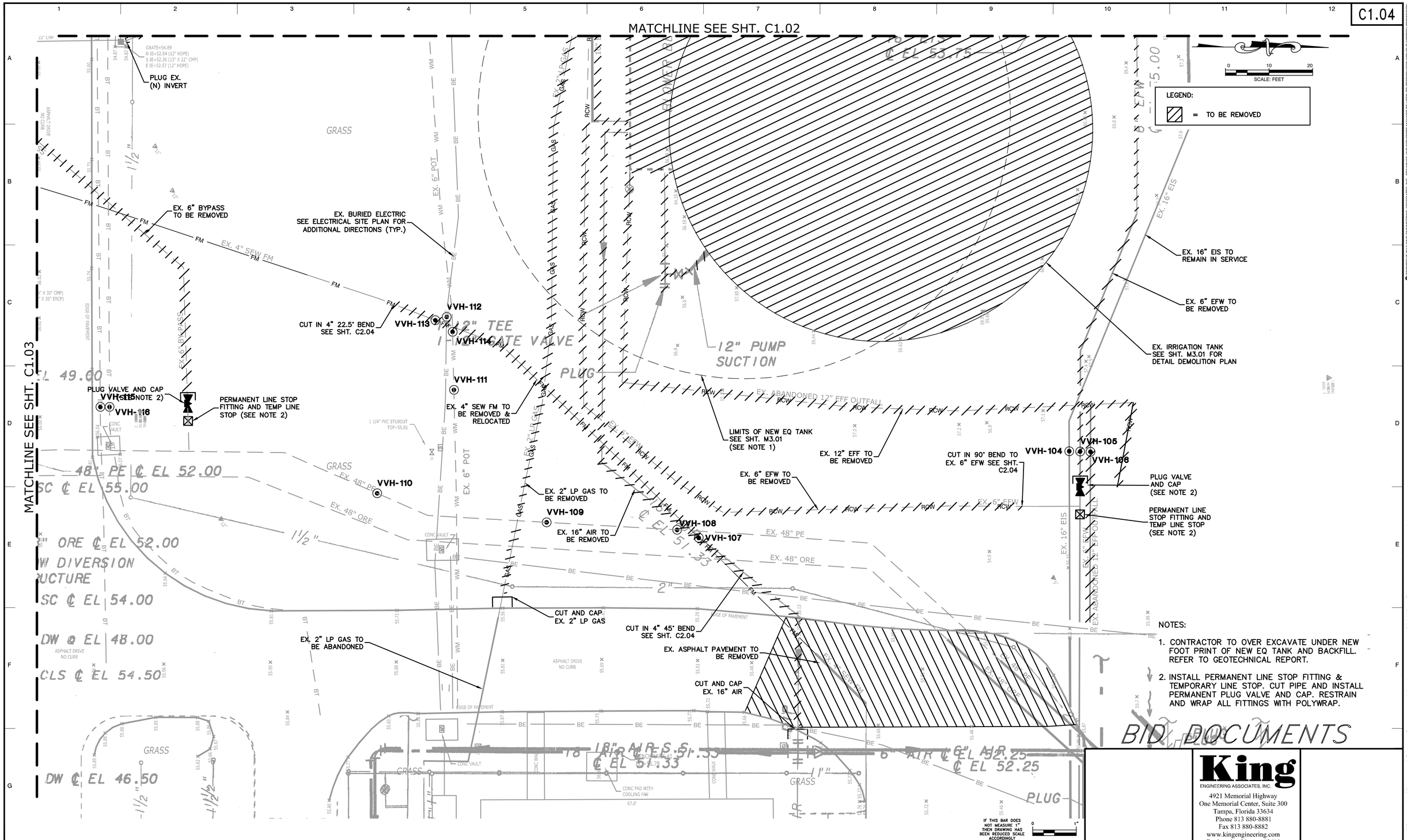

NOTES:

1. CONTRACTOR TO OVER EXCAVATE UNDER NEW FOOT PRINT OF NEW EQ TANK AND BACKFILL. REFER TO GEOTECHNICAL REPORT.
2. INSTALL PERMANENT LINE STOP FITTING & TEMPORARY LINE STOP. CUT PIPE AND INSTALL PERMANENT PLUG VALVE AND CAP. RESTRAIN AND WRAP ALL FITTINGS WITH POLYWRAP.

BID DOCUMENTS

King
ENGINEERING ASSOCIATES, INC.
4921 Memorial Highway
One Memorial Center, Suite 300
Tampa, Florida 33634
Phone 813 880-8881
Fax 813 880-8882
www.kingengineering.com
Engineering License #2610

RECORD DRAWINGS

SURVEYED BY:	DRAWN BY:
REVIEWED BY:	PROJECT ENGINEER / DATE
APPROVED BY:	ENGINEER / DATE

REVISION	BY	DATE

CITY OF CLEARWATER, FLORIDA
ENGINEERING DEPARTMENT
100 S. MYRTLE AVE.
CLEARWATER, FL 33756

INVESTIGATE BEFORE YOU EXCAVATE
CALL 811
SUNSHINE STATE ONE CALL OF FLORIDA
www.callsunshine.com
(800) 432-4770
MIN. 48 HOURS BEFORE YOU EXCAVATE

NORTHEAST WRF GRIT REMOVAL, MOVING BELT FILTER AND EQUALIZATION SYSTEM IMPROVEMENTS

EXISTING YARD PIPING DEMO PLAN (4)

DWG NAME: C1.01 – C1.04	FIELD BOOK:	SURVEYED BY:	SCALE: VERT. N/A
CONTRACT NO.: 15-0045-UT	DATE DRAWN: MARCH 2016	DRAWN BY: MJG	HORIZ. AS SHOWN
JOB NO.: 2110-210-002	DESIGNED BY: LVM	CHECKED BY: TAT	SHEET NO.: 13 of 117

APPROVED FOR CONSTRUCTION

© COPYRIGHT 2010 KING ENGINEERING ASSOCIATES, INC. DRAWINGS AND CONCEPTS MAY NOT BE USED OR REPRODUCED WITHOUT WRITTEN PERMISSION. CONSENT IS HEREBY GRANTED SPECIFICALLY TO GOVERNMENTAL AGENCIES TO REPRODUCE THIS DOCUMENT IN COMPLIANCE WITH F.S. CHAPTER 119.

O:\ENV_ENG\2110\210\002\Production\Drawings\C1.01 - C1.04.dwg, March 26, 2020 2:57 PM, King Engineering Associate Inc.

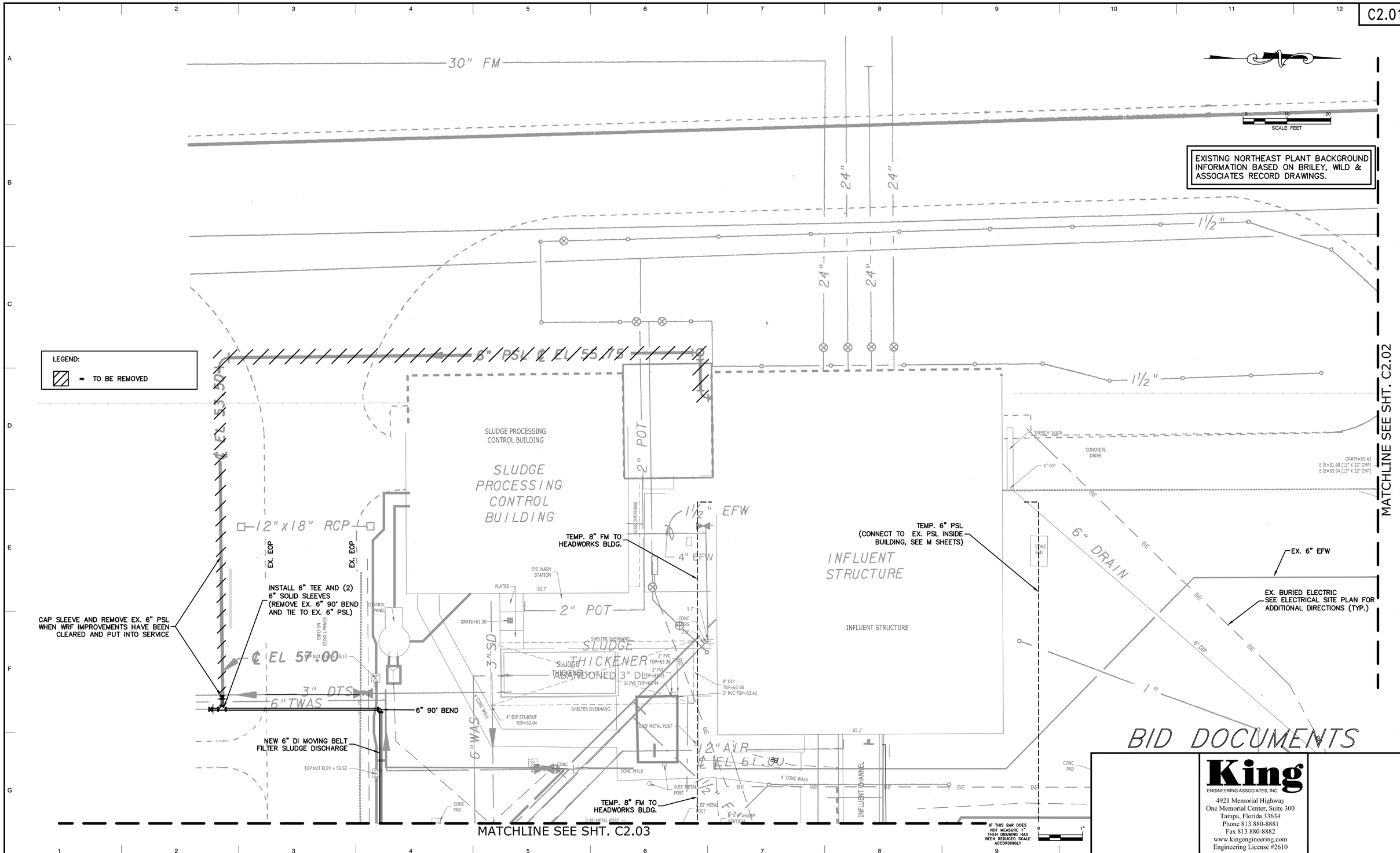

King
ENGINEERING ASSOCIATES, INC.
4921 Memorial Highway
One Memorial Center, Suite 300
Tampa, Florida 33634
Phone 813 880-8881
Fax 813 880-8882
www.kingengineering.com
Engineering License #2610

© COPYRIGHT 2010 KING ENGINEERING ASSOCIATES, INC. DRAWINGS AND CONCEPTS MAY NOT BE USED OR REPRODUCED WITHOUT WRITTEN PERMISSION CONSENT IS HEREBY GRANTED SPECIFICALLY TO GOVERNMENTAL AGENCIES TO REPRODUCE THIS DOCUMENT IN COMPLIANCE WITH F.S. CHAPTER 119.

O:\ENV_ENG\2110\210\002\production\Drawings\C2.01 - C2.04.dwg, March 18, 2020 1:57 PM, King Engineering Associate Inc.

RECORD DRAWINGS
SURVEYED BY: DRAWN BY:
REVIEWED BY: PROJECT ENGINEER DATE
APPROVED BY: ENGINEER DATE

REVISION	BY	DATE

CITY OF CLEARWATER, FLORIDA
ENGINEERING DEPARTMENT
100 S. MYRTLE AVE.
CLEARWATER, FL 33756

INVESTIGATE BEFORE YOU EXCAVATE
CALL 811
SUNSHINE STATE ONE CALL OF FLORIDA
www.callsunshine.com
(800) 432-4770
MIN. 48 HOURS BEFORE YOU EXCAVATE

NORTHEAST WRF GRIT REMOVAL, MOVING BELT FILTER AND EQUALIZATION SYSTEM IMPROVEMENTS

PROPOSED YARD PIPING PLAN (1)

DWG NAME: C2.01 – C2.04	FIELD BOOK:	SURVEYED BY:	SCALE: VERT. N/A
CONTRACT NO.: 15-0045-UT	DATE DRAWN: MARCH 2016	DRAWN BY: MJG	HORIZ. AS SHOWN
JOB NO.: 2110-210-002	DESIGNED BY: LVM	CHECKED BY: TAT	SHEET NO.: 14 of 117
APPROVED FOR CONSTRUCTION			

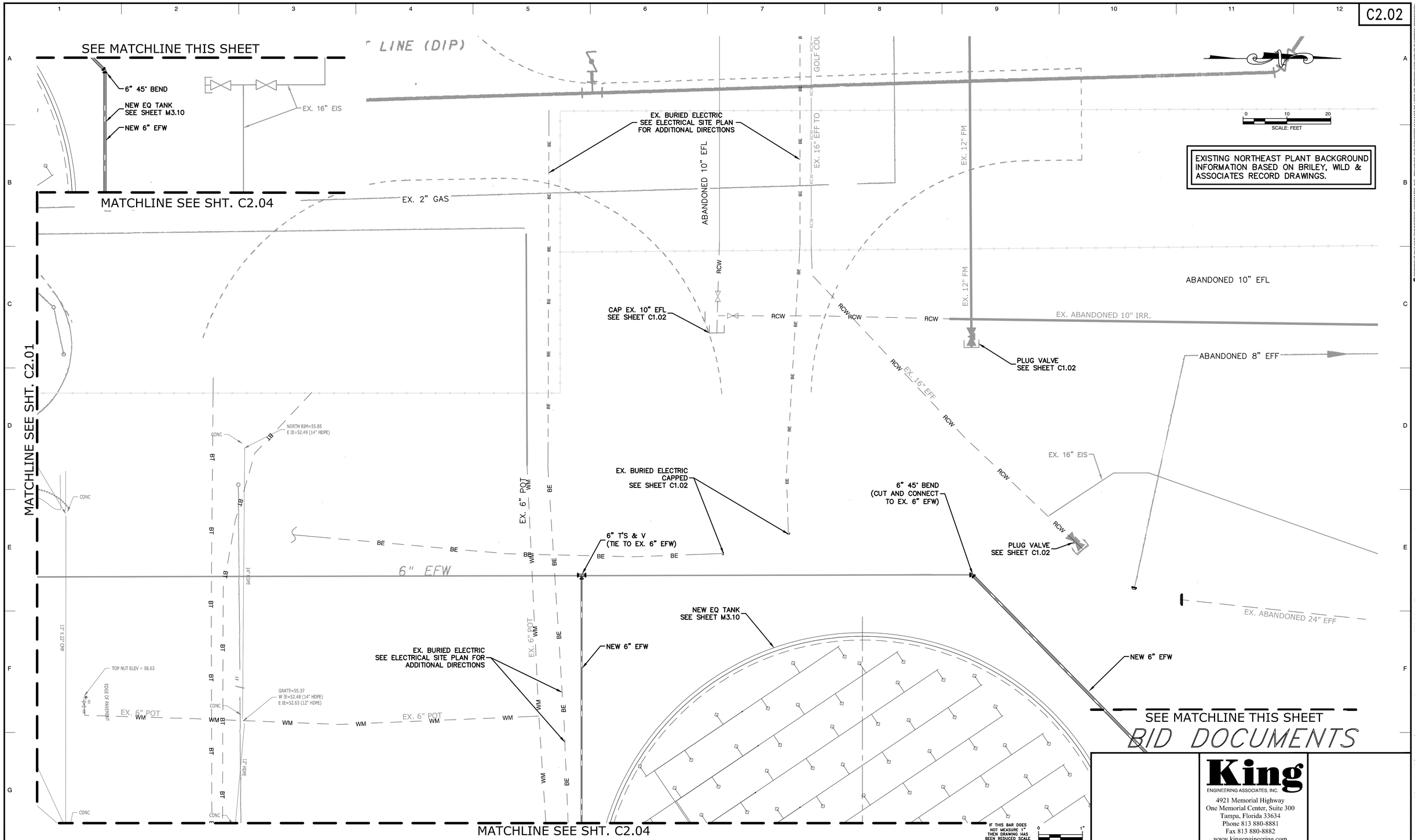

King
ENGINEERING ASSOCIATES, INC.
4921 Memorial Highway
One Memorial Center, Suite 300
Tampa, Florida 33634
Phone 813 880-8881
Fax 813 880-8882
www.kingengineering.com
Engineering License #2610

RECORD DRAWINGS

SURVEYED BY: DRAWN BY:
REVIEWED BY: PROJECT ENGINEER DATE
APPROVED BY: ENGINEER DATE

REVISION	BY	DATE

CITY OF CLEARWATER, FLORIDA
ENGINEERING DEPARTMENT
100 S. MYRTLE AVE.
CLEARWATER, FL 33756

INVESTIGATE BEFORE YOU EXCAVATE
CALL 811
SUNSHINE STATE ONE CALL OF FLORIDA
www.callsunshine.com
(800) 432-4770
MIN. 48 HOURS BEFORE YOU EXCAVATE

NORTHEAST WRF GRIT REMOVAL, MOVING BELT FILTER AND EQUALIZATION SYSTEM IMPROVEMENTS

PROPOSED YARD PIPING PLAN (2)

DWG NAME: C2.01 – C2.04	FIELD BOOK:	SURVEYED BY:	SCALE: VERT. N/A
CONTRACT NO.: 15-0045-UT	DATE DRAWN: MARCH 2016	DRAWN BY: MJG	HORIZ. AS SHOWN
JOB NO.: 2110-210-002	DESIGNED BY: LVM	CHECKED BY: TAT	SHEET NO.: 15 of 117

APPROVED FOR CONSTRUCTION

© COPYRIGHT 2010 KING ENGINEERING ASSOCIATES, INC. DRAWINGS AND CONCEPTS MAY NOT BE USED OR REPRODUCED WITHOUT WRITTEN PERMISSION CONSENT IS HEREBY GRANTED SPECIFICALLY TO GOVERNMENTAL AGENCIES TO REPRODUCE THIS DOCUMENT IN COMPLIANCE WITH F.S. CHAPTER 119.

O:\ENV_ENG\2110\210\002\production\Drawings\C2.01 - C2.04.dwg, March 18, 2020 1:58 PM, King Engineering Associate Inc.

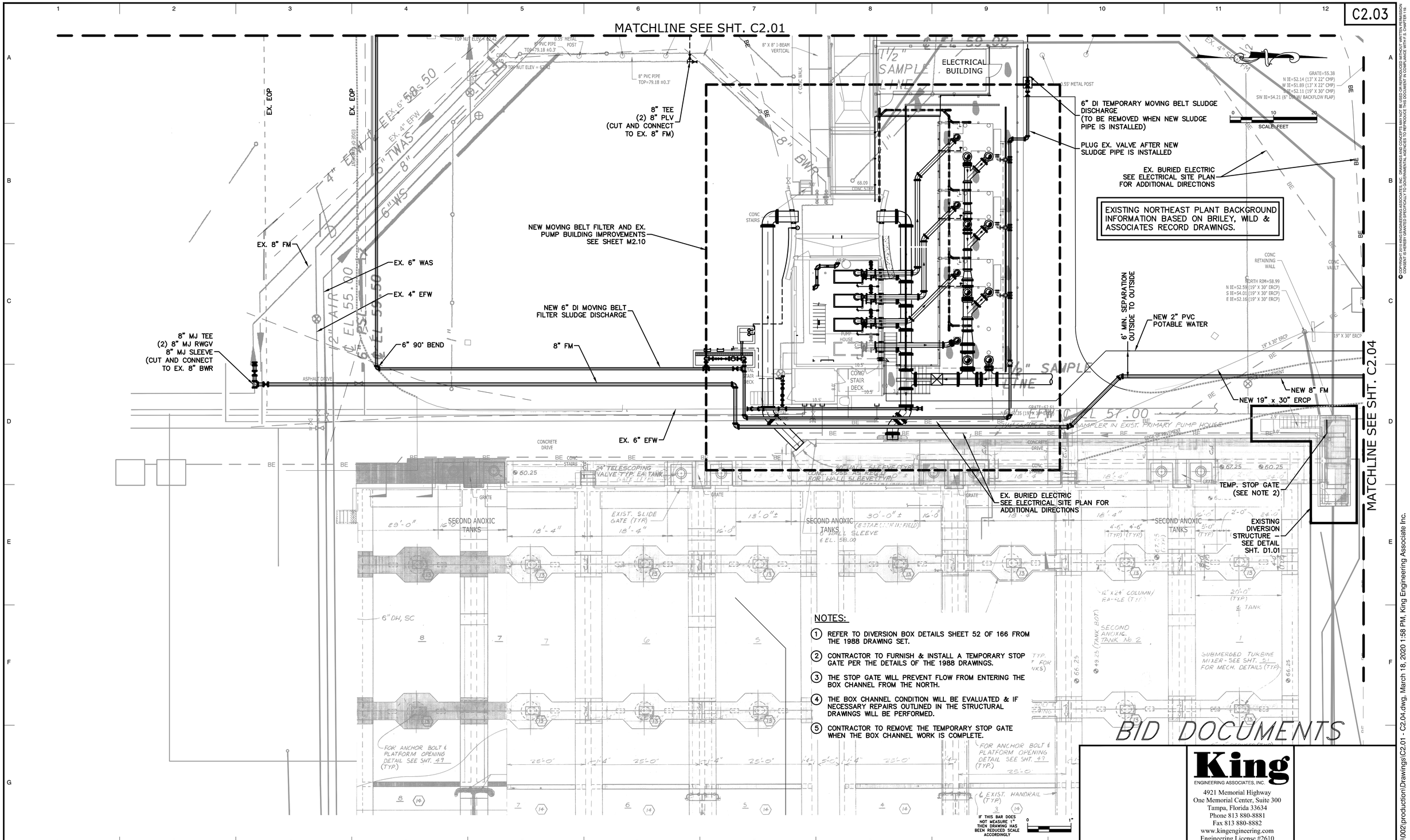

NOTES:

1. REFER TO DIVERSION BOX DETAILS SHEET 52 OF 166 FROM THE 1988 DRAWING SET.
2. CONTRACTOR TO FURNISH & INSTALL A TEMPORARY STOP GATE PER THE DETAILS OF THE 1988 DRAWINGS.
3. THE STOP GATE WILL PREVENT FLOW FROM ENTERING THE BOX CHANNEL FROM THE NORTH.
4. THE BOX CHANNEL CONDITION WILL BE EVALUATED & IF NECESSARY REPAIRS OUTLINED IN THE STRUCTURAL DRAWINGS WILL BE PERFORMED.
5. CONTRACTOR TO REMOVE THE TEMPORARY STOP GATE WHEN THE BOX CHANNEL WORK IS COMPLETE.

BID DOCUMENTS

King
ENGINEERING ASSOCIATES, INC.
4921 Memorial Highway
One Memorial Center, Suite 300
Tampa, Florida 33634
Phone 813 880-8881
Fax 813 880-8882
www.kingengineering.com
Engineering License #2610

© COPYRIGHT 2010 KING ENGINEERING ASSOCIATES, INC. DRAWINGS AND CONCEPTS MAY NOT BE USED OR REPRODUCED WITHOUT WRITTEN PERMISSION. CONSENT IS HEREBY GRANTED SPECIFICALLY TO GOVERNMENTAL AGENCIES TO REPRODUCE THIS DOCUMENT IN COMPLIANCE WITH F.S. CHAPTER 119.

RECORD DRAWINGS

SURVEYED BY: | DRAWN BY:
REVIEWED BY: PROJECT ENGINEER | DATE
APPROVED BY: ENGINEER | DATE

REVISION	BY	DATE

CITY OF CLEARWATER, FLORIDA
ENGINEERING DEPARTMENT
100 S. MYRTLE AVE.
CLEARWATER, FL 33756

INVESTIGATE BEFORE YOU EXCAVATE
CALL 811
SUNSHINE STATE ONE CALL OF FLORIDA
www.callsunshine.com
(800) 432-4770
MIN. 48 HOURS BEFORE YOU EXCAVATE

NORTHEAST WRF GRIT REMOVAL, MOVING BELT FILTER AND EQUALIZATION SYSTEM IMPROVEMENTS

PROPOSED YARD PIPING PLAN (3)

DWG NAME: C2.01 – C2.04	FIELD BOOK:	SURVEYED BY:	SCALE: VERT. N/A
CONTRACT NO.: 15-0045-UT	DATE DRAWN: MARCH 2016	DRAWN BY: MJG	HORIZ. AS SHOWN
JOB NO.: 2110-210-002	DESIGNED BY: LVM	CHECKED BY: TAT	SHEET NO.: 16 of 117

APPROVED FOR CONSTRUCTION

O:\ENV_ENG\2110\210\002\production\Drawings\C2.01 - C2.04.dwg, March 18, 2020 1:58 PM, King Engineering Associate Inc.

C2.04

MATCHLINE SEE SHT. C2.02

MATCHLINE SEE SHT. C2.03

EXISTING NORTHEAST PLANT BACKGROUND INFORMATION BASED ON BRILEY, WILD & ASSOCIATES RECORD DRAWINGS.

SCALE: FEET

NEW 4" EFW SEE SHEET M3.10

EQUALIZATION TANK SEE SHEET M3.10

EX. BURIED ELECTRIC SEE ELECTRICAL SITE PLAN FOR ADDITIONAL DIRECTIONS (TYP.)

4" 45° BEND (CUT AND CONNECT TO EX. 4" SEW FM)

NEW 2" PVC POTABLE WATER

6' MIN. SEPARATION OUTSIDE TO OUTSIDE

DEFLECT PIPES TO CLEAR EX. UTILITIES AS REQUIRED

6"x2" TAPPING SADDLE W/ 2" BV

NEW 8" FM

PLUG VALVE SEE SHEET C1.02

SUPPLY PUMP STATION SEE SHT. M3.15

RELOCATED 4" SEW FM

30"X12" REDUCER

4" 45° BEND (CUT AND CONNECT TO EX. 4" SEW FM)

30"X16" REDUCER

RETURN PUMP STATION SEE SHT. M3.15

48" x 30" T,S&V (TIE TO EX. 48" PE PIPE)

RELOCATED 4" SEW FM

48" x 30" T,S&V (TIE TO EX. 48" PE PIPE)

NEW 6" EFW SEE SHEET M3.10

6" TEE (3) 6" RWGV

NEW 6" EFW

6" 90° BEND (CUT AND CONNECT TO EX. 6" EFW)

NEW 6" EFW

PLUG VALVE SEE SHEET C1.02

NEW DITCH LINING

DIELECTRIC COUPLINGS (S.S. TO D.I.P.)

18" AIR ℄ EL 51.33

6" AIR ℄ EL 52.25

℄ EL 49.00

℄ EL 46.50

EX. 4" SEW FM

EX. 48" PE

EX. 48" ORE

EX. 16" EIS

EX. 6" EFW

EX. ABANDONED 12" EFF OUTFALL

EX. 6" POT

ASPHALT DRIVE NO CURB

CONC VAULT

CONC WALK

CONC PAD WITH COOLING FAN

EDGE OF PAVEMENT

GRATE=54.89
N IE=52.54 (12" HDPE)
S IE=52.36 (13" X 22" CMP)
E IE=52.57 (12" HDPE)

GRATE=55.68
W IE=51.93 (19" X 30" CMP)
S IE=52.51 (19" X 30" ERCP)

IF THIS BAR DOES NOT MEASURE 1" THEN DRAWING HAS BEEN REDUCED SCALE ACCORDINGLY

BID DOCUMENTS

King
ENGINEERING ASSOCIATES, INC.
4921 Memorial Highway
One Memorial Center, Suite 300
Tampa, Florida 33634
Phone 813 880-8881
Fax 813 880-8882
www.kingengineering.com
Engineering License #2610

RECORD DRAWINGS
SURVEYED BY: DRAWN BY:
REVIEWED BY: PROJECT ENGINEER DATE
APPROVED BY: ENGINEER DATE

REVISION	BY	DATE

CITY OF CLEARWATER, FLORIDA
ENGINEERING DEPARTMENT
100 S. MYRTLE AVE.
CLEARWATER, FL 33756

INVESTIGATE BEFORE YOU EXCAVATE
CALL 811
SUNSHINE STATE ONE CALL OF FLORIDA
www.callsunshine.com
(800) 432-4770
MIN. 48 HOURS BEFORE YOU EXCAVATE

NORTHEAST WRF GRIT REMOVAL, MOVING BELT FILTER AND EQUALIZATION SYSTEM IMPROVEMENTS

PROPOSED YARD PIPING PLAN (4)

DWG NAME: C2.01 – C2.04	FIELD BOOK:	SURVEYED BY:	SCALE: VERT. N/A
CONTRACT NO.: 15-0045-UT	DATE DRAWN: MARCH 2016	DRAWN BY: MJG	HORIZ. AS SHOWN
JOB NO.: 2110-210-002	DESIGNED BY: LVM	CHECKED BY: TAT	SHEET NO.: 17 of 117

APPROVED FOR CONSTRUCTION

COPYRIGHT © 2010 KING ENGINEERING ASSOCIATES, INC. DRAWINGS AND CONCEPTS MAY NOT BE USED OR REPRODUCED WITHOUT WRITTEN PERMISSION. CONSENT IS HEREBY GRANTED SPECIFICALLY TO GOVERNMENTAL AGENCIES TO REPRODUCE THIS DOCUMENT IN COMPLIANCE WITH F.S. CHAPTER 119.

O:\ENV_ENG\2110\210\002\Production\Drawings\C2.01 - C2.04.dwg, March 26, 2020 2:37 PM, King Engineering Associate Inc.

C3.01

EXISTING NORTHEAST PLANT BACKGROUND INFORMATION BASED ON BRILEY, WILD & ASSOCIATES RECORD DRAWINGS.

NOTES:

1. ALL EXISTING STORM WATER INLETS TO BE PROTECTED, SEE DETAILS, SHEETS C3.05 AND C3.06.

SCALE: FEET

6" PSL ℄ EL 55.75

SLUDGE PROCESSING CONTROL BUILDING

INFLUENT STRUCTURE

SLUDGE THICKENER

ABANDONED 3" DI

12"x18" RCP

℄ EL 57.00

℄ EL 59.00

℄ EL 61.00

EXISTING PAVEMENT

CONCRETE DRIVE

TRENCH DRAIN

6" DRAIN

SILT FENCE (TYP)

CUT & PATCH EX. ASPHALT DRIVE PER CITY STD. SEE DETAIL SHT. D1.02

FILL & COMPACT IN AREA OF DEMOLISHED CLARIFIER (TYP. 2 CLARIFIERS)

MCC BUILDING

SLAB EL.= 63.52

SLAB EL.= 63.00

PROPOSED ASPHALTIC CONCRETE PAVEMENT

CONTRACTOR TO CONNECT TO EXISTING STRUCTURE @ INV: 52.54 (N)

MATCHLINE SEE SHT. C3.02

MATCHLINE SEE SHT. C3.03

BID DOCUMENTS

IF THIS BAR DOES NOT MEASURE 1" THEN DRAWING HAS BEEN REDUCED SCALE ACCORDINGLY

King
ENGINEERING ASSOCIATES, INC.
4921 Memorial Highway
One Memorial Center, Suite 300
Tampa, Florida 33634
Phone 813 880-8881
Fax 813 880-8882
www.kingengineering.com
Engineering License #2610

© COPYRIGHT 2010 KING ENGINEERING ASSOCIATES, INC. DRAWINGS AND CONCEPTS MAY NOT BE USED OR REPRODUCED WITHOUT WRITTEN PERMISSION CONSENT IS HEREBY GRANTED SPECIFICALLY TO GOVERNMENTAL AGENCIES TO REPRODUCE THIS DOCUMENT IN COMPLIANCE WITH F.S. CHAPTER 119.

O:\ENV_ENG\2110\210\002\production\Drawings\C3.01 - C3.05.dwg, March 18, 2020 1:59 PM, King Engineering Associate Inc.

RECORD DRAWINGS

SURVEYED BY: | DRAWN BY:

REVIEWED BY: PROJECT ENGINEER DATE

APPROVED BY: ENGINEER DATE

REVISION	BY	DATE

CITY OF CLEARWATER, FLORIDA
ENGINEERING DEPARTMENT
100 S. MYRTLE AVE.
CLEARWATER, FL 33756

INVESTIGATE BEFORE YOU EXCAVATE
CALL 811
SUNSHINE STATE ONE CALL OF FLORIDA
www.callsunshine.com
(800) 432-4770
MIN. 48 HOURS BEFORE YOU EXCAVATE

NORTHEAST WRF GRIT REMOVAL, MOVING BELT FILTER AND EQUALIZATION SYSTEM IMPROVEMENTS

PROPOSED PAVING, GRADING, AND DRAINAGE (1)

DWG NAME: C3.01 – C3.05	FIELD BOOK:	SURVEYED BY:	SCALE: VERT. N/A
CONTRACT NO.: 15-0045-UT	DATE DRAWN: MARCH 2016	DRAWN BY: MJG	HORIZ. AS SHOWN
JOB NO.: 2110-210-002	DESIGNED BY: LVM	CHECKED BY: TAT	SHEET NO.: 18 of 117

APPROVED FOR CONSTRUCTION

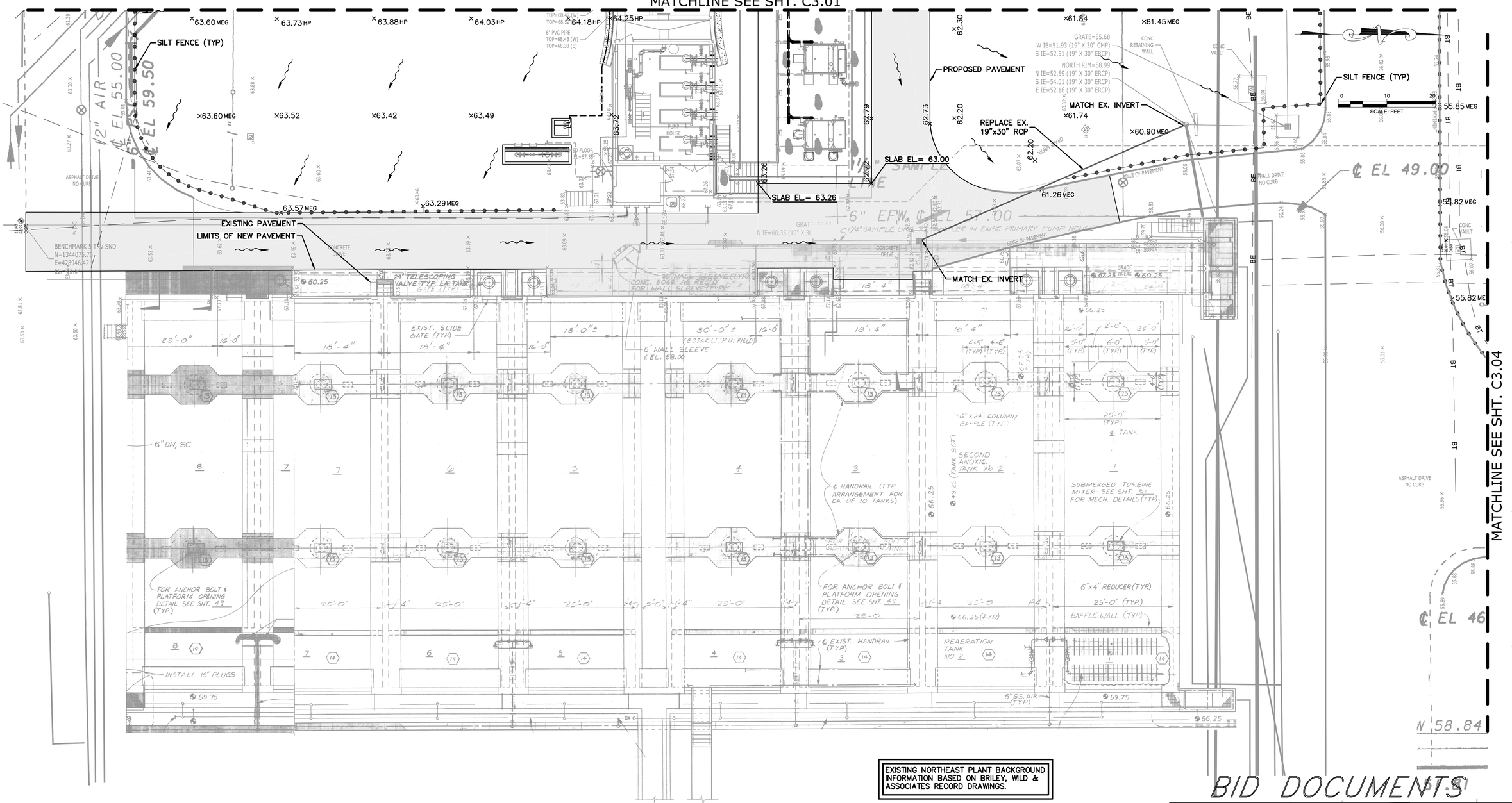

EXISTING NORTHEAST PLANT BACKGROUND INFORMATION BASED ON BRILEY, WILD & ASSOCIATES RECORD DRAWINGS.

NOTES:

1. ALL EXISTING STORM WATER INLETS TO BE PROTECTED, SEE DETAILS, SHEETS C3.05 AND C3.06.

BID DOCUMENTS

IF THIS BAR DOES NOT MEASURE 1" THEN DRAWING HAS BEEN REDUCED SCALE ACCORDINGLY

King
ENGINEERING ASSOCIATES, INC.
4921 Memorial Highway
One Memorial Center, Suite 300
Tampa, Florida 33634
Phone 813 880-8881
Fax 813 880-8882
www.kingengineering.com
Engineering License #2610

© COPYRIGHT 2010 KING ENGINEERING ASSOCIATES, INC. DRAWINGS AND CONCEPTS MAY NOT BE USED OR REPRODUCED WITHOUT WRITTEN PERMISSION CONSENT IS HEREBY GRANTED SPECIFICALLY TO GOVERNMENTAL AGENCIES TO REPRODUCE THIS DOCUMENT IN COMPLIANCE WITH F.S. CHAPTER 119.

RECORD DRAWINGS

SURVEYED BY: | DRAWN BY:
REVIEWED BY: PROJECT ENGINEER | DATE
APPROVED BY: ENGINEER | DATE

REVISION	BY	DATE

CITY OF CLEARWATER, FLORIDA
ENGINEERING DEPARTMENT
100 S. MYRTLE AVE.
CLEARWATER, FL 33756

INVESTIGATE BEFORE YOU EXCAVATE
CALL 811
SUNSHINE STATE ONE CALL OF FLORIDA
www.callsunshine.com
(800) 432-4770
MIN. 48 HOURS BEFORE YOU EXCAVATE

NORTHEAST WRF GRIT REMOVAL, MOVING BELT FILTER AND EQUALIZATION SYSTEM IMPROVEMENTS

PROPOSED PAVING, GRADING, AND DRAINAGE (3)

DWG NAME: C3.01 – C3.05	FIELD BOOK:	SURVEYED BY:	SCALE: VERT. N/A
CONTRACT NO.: 15-0045-UT	DATE DRAWN: MARCH 2016	DRAWN BY: MJG	HORIZ. AS SHOWN
JOB NO.: 2110-210-002	DESIGNED BY: LVM	CHECKED BY: TAT	SHEET NO.: 20 of 117

APPROVED FOR CONSTRUCTION

O:\ENV_ENG\2110\210\002\production\Drawings\C3.01 - C3.05.dwg, March 18, 2020 1:59 PM, King Engineering Associate Inc.

EXISTING NORTHEAST PLANT BACKGROUND INFORMATION BASED ON BRILEY, WILD & ASSOCIATES RECORD DRAWINGS.

NOTES:

1. ALL EXISTING STORM WATER INLETS TO BE PROTECTED, SEE DETAILS, SHEETS C3.05 AND C3.06.

SCALE: FEET (0, 10, 20)

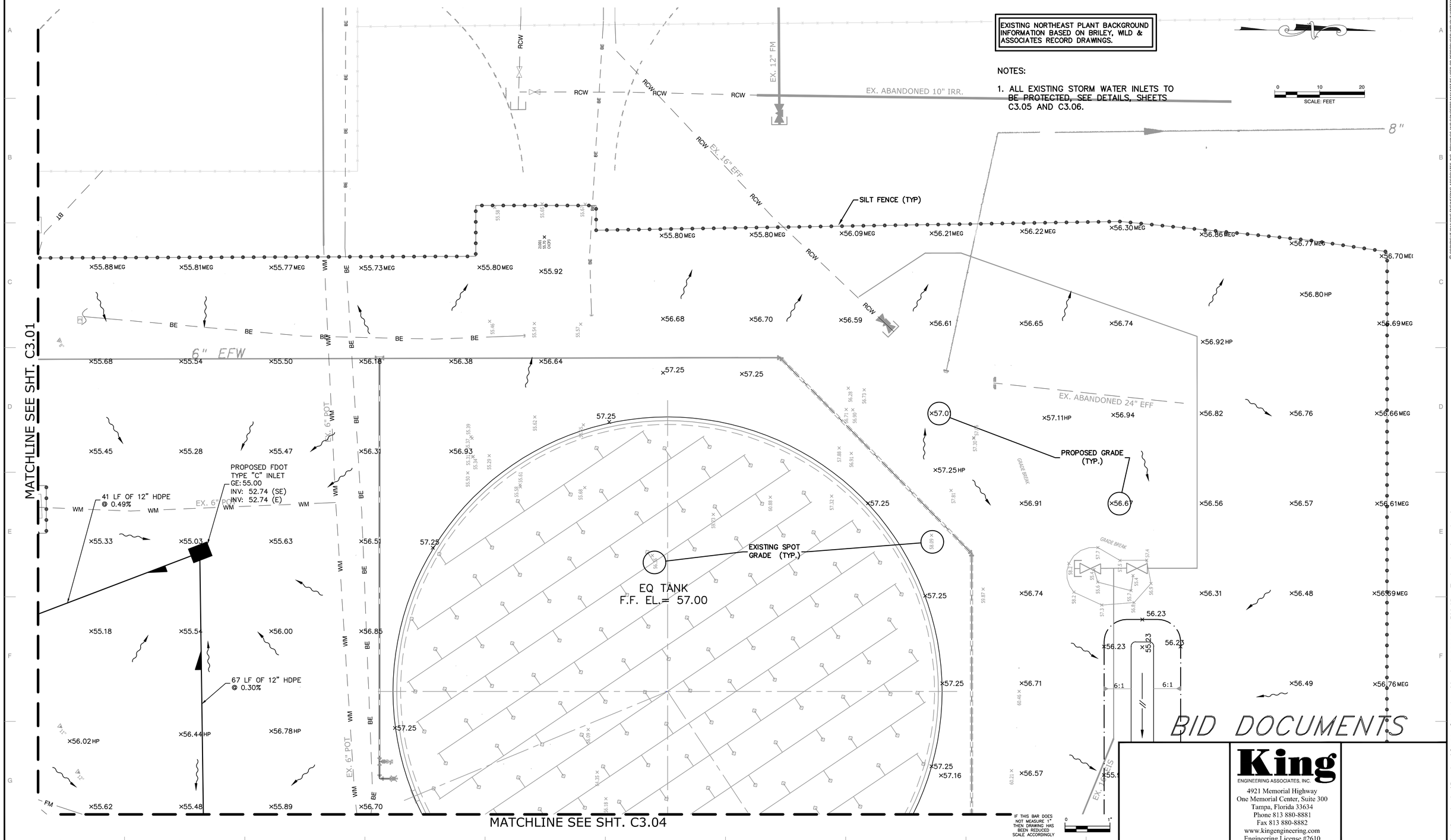

IF THIS BAR DOES NOT MEASURE 1" THEN DRAWING HAS BEEN REDUCED SCALE ACCORDINGLY

King
ENGINEERING ASSOCIATES, INC.
4921 Memorial Highway
One Memorial Center, Suite 300
Tampa, Florida 33634
Phone 813 880-8881
Fax 813 880-8882
www.kingengineering.com
Engineering License #2610

© COPYRIGHT 2010 KING ENGINEERING ASSOCIATES, INC. DRAWINGS AND CONCEPTS MAY NOT BE USED OR REPRODUCED WITHOUT WRITTEN PERMISSION CONSENT IS HEREBY GRANTED SPECIFICALLY TO GOVERNMENTAL AGENCIES TO REPRODUCE THIS DOCUMENT IN COMPLIANCE WITH F.S. CHAPTER 119.

O:\ENV_ENG\2110\210\002\production\Drawings\C3.01 - C3.05.dwg, March 18, 2020 2:00 PM, King Engineering Associate Inc.

RECORD DRAWINGS

SURVEYED BY: | DRAWN BY:
REVIEWED BY:
PROJECT ENGINEER | DATE
APPROVED BY:
ENGINEER | DATE

REVISION	BY	DATE

CITY OF CLEARWATER, FLORIDA
ENGINEERING DEPARTMENT
100 S. MYRTLE AVE.
CLEARWATER, FL 33756

INVESTIGATE BEFORE YOU EXCAVATE
CALL 811
SUNSHINE STATE ONE CALL OF FLORIDA
www.callsunshine.com
(800) 432-4770
MIN. 48 HOURS BEFORE YOU EXCAVATE

NORTHEAST WRF GRIT REMOVAL, MOVING BELT FILTER AND EQUALIZATION SYSTEM IMPROVEMENTS

PROPOSED PAVING, GRADING, AND DRAINAGE (2)

DWG NAME: C3.01 – C3.05	FIELD BOOK:	SURVEYED BY:	SCALE: VERT. N/A
CONTRACT NO.: 15-0045-UT	DATE DRAWN: MARCH 2016	DRAWN BY: MJG	HORIZ. AS SHOWN
JOB NO.: 2110-210-002	DESIGNED BY: LVM	CHECKED BY: TAT	SHEET NO.: 19 of 117
APPROVED FOR CONSTRUCTION			

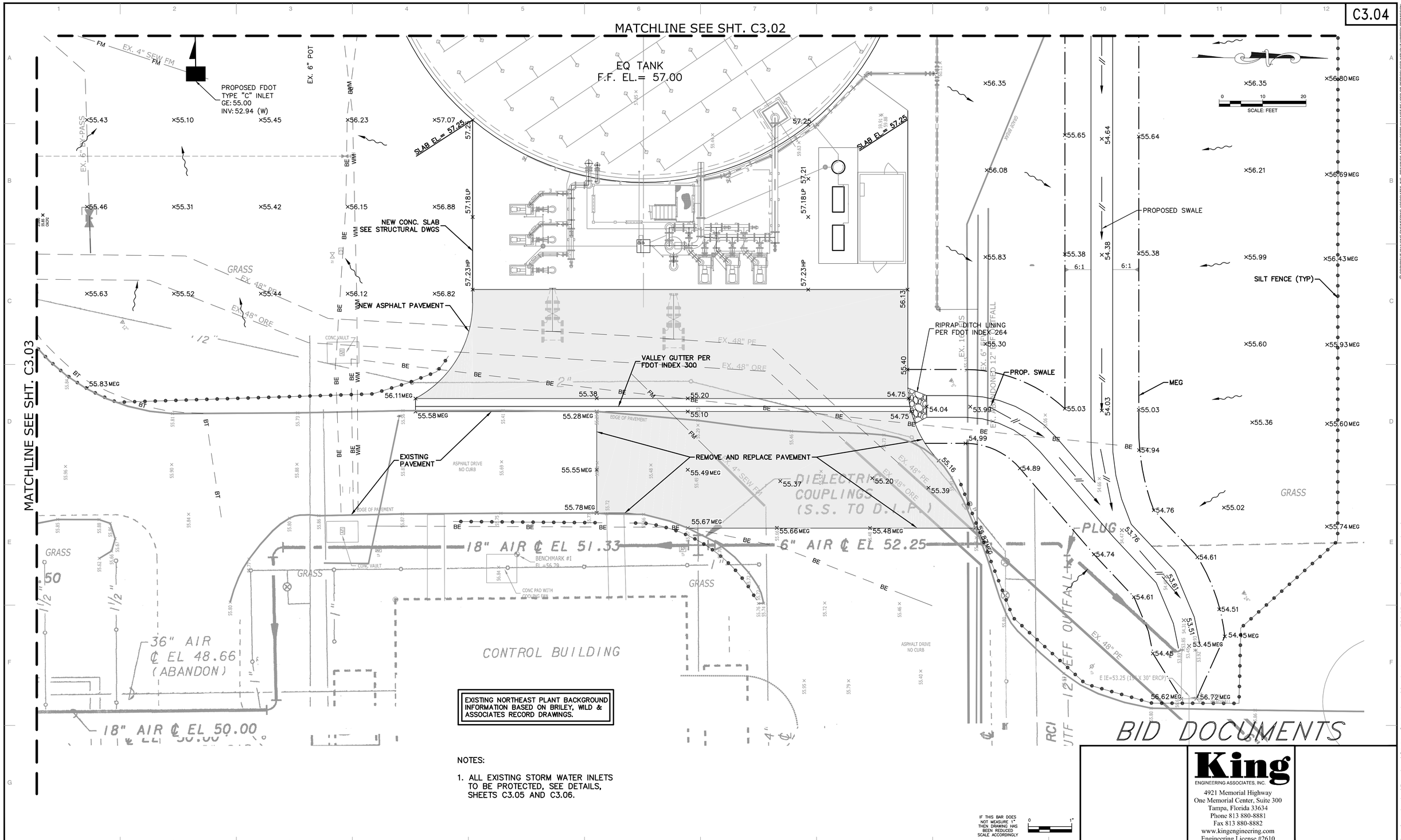

EXISTING NORTHEAST PLANT BACKGROUND INFORMATION BASED ON BRILEY, WILD & ASSOCIATES RECORD DRAWINGS.

NOTES:

1. ALL EXISTING STORM WATER INLETS TO BE PROTECTED, SEE DETAILS, SHEETS C3.05 AND C3.06.

IF THIS BAR DOES NOT MEASURE 1" THEN DRAWING HAS BEEN REDUCED SCALE ACCORDINGLY

King
ENGINEERING ASSOCIATES, INC.
4921 Memorial Highway
One Memorial Center, Suite 300
Tampa, Florida 33634
Phone 813 880-8881
Fax 813 880-8882
www.kingengineering.com
Engineering License #2610

© COPYRIGHT 2010 KING ENGINEERING ASSOCIATES, INC. DRAWINGS AND CONCEPTS MAY NOT BE USED OR REPRODUCED WITHOUT WRITTEN PERMISSION CONSENT IS HEREBY GRANTED SPECIFICALLY TO GOVERNMENTAL AGENCIES TO REPRODUCE THIS DOCUMENT IN COMPLIANCE WITH F.S. CHAPTER 119.

RECORD DRAWINGS

SURVEYED BY: | DRAWN BY:
REVIEWED BY:
PROJECT ENGINEER | DATE
APPROVED BY:
ENGINEER | DATE

REVISION	BY	DATE

CITY OF CLEARWATER, FLORIDA
ENGINEERING DEPARTMENT
100 S. MYRTLE AVE.
CLEARWATER, FL 33756

INVESTIGATE BEFORE YOU EXCAVATE
CALL 811
SUNSHINE STATE ONE CALL OF FLORIDA
www.callsunshine.com
(800) 432-4770
MIN. 48 HOURS BEFORE YOU EXCAVATE

NORTHEAST WRF GRIT REMOVAL, MOVING BELT FILTER AND EQUALIZATION SYSTEM IMPROVEMENTS

PROPOSED PAVING, GRADING, AND DRAINAGE (4)

DWG NAME: C3.01 – C3.05	FIELD BOOK:	SURVEYED BY:	SCALE: VERT. N/A
CONTRACT NO.: 15-0045-UT	DATE DRAWN: MARCH 2016	DRAWN BY: MJG	HORIZ. AS SHOWN
JOB NO.: 2110-210-002	DESIGNED BY: LVM	CHECKED BY: TAT	SHEET NO.: 21 of 117

APPROVED FOR CONSTRUCTION

O:\ENV_ENG\2110\210\002\production\Drawings\C3.01 - C3.05.dwg, March 18, 2020 2:00 PM, King Engineering Associate Inc.

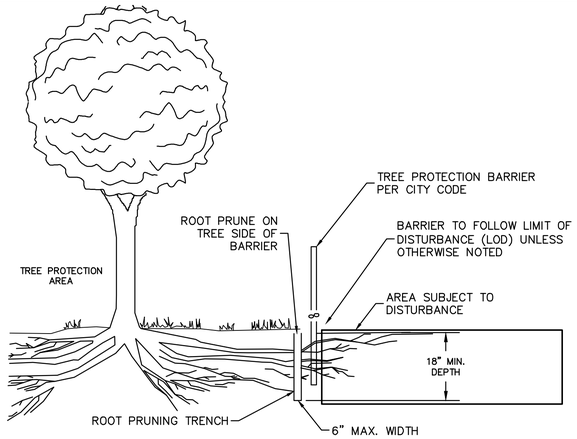

NOTES:

1. CRITICAL ROOT ZONE (CRZ) IS EQUAL TO 10" PER INCH OF TRUCK DIAMETER MEASURED 4.5 INCHES HIGH OFF OF GRADE. IE 30" DIAMETER = 25' (CRZ).
2. TREE PROTECTION ZONE (TPZ) IS AREA AS DEFINED IN CLEARWATER INDEX NO. 909.
3. ROOT PRUNING TO BE PERFORMED BY AN ISA CERTIFIED ARBORIST ONLY USING A SPECIALIZED ROOT PRUNING MACHINE.
4. ALL ROOTS TO BE CUT CLEAN AND AN APPROVED FUNGICIDE APPLIED TO ALL CUTS UNDER 30 MINUTES FROM TIME OF CUTTING.
5. NO CUTTING OF ROOTS SHALL BE PERMITTED WITHIN THE CRZ.
6. TPZ BARRIER TO BE ERECTED PRIOR TO ANY WORK ON SITE.
7. BACKFILL TENCH WITH NATIVE SOIL AFTER CUTTING IS APPROVED BY CITY ARBORIST.

ROOT PRUNING DETAIL

N.T.S.

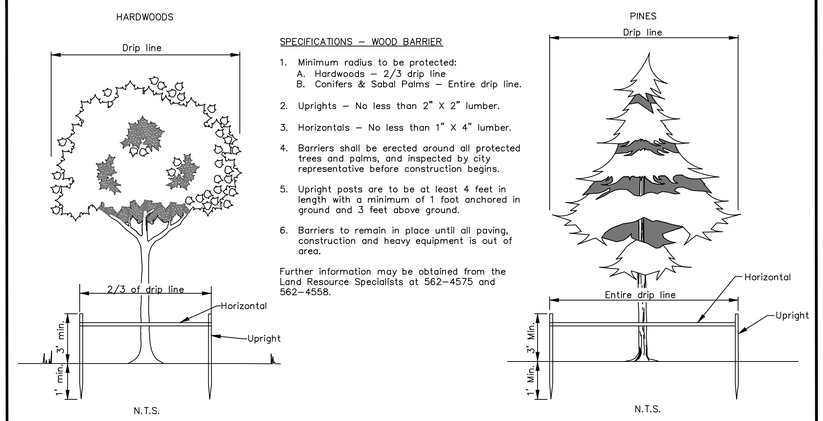

SPECIFICATIONS – WOOD BARRIER

1. Minimum radius to be protected:
   A. Hardwoods – 2/3 drip line
   B. Conifers & Sabal Palms – Entire drip line.
2. Uprights – No less than 2" X 2" lumber.
3. Horizontals – No less than 1" X 4" lumber.
4. Barriers shall be erected around all protected trees and palms, and inspected by city representative before construction begins.
5. Upright posts are to be at least 4 feet in length with a minimum of 1 foot anchored in ground and 3 feet above ground.
6. Barriers to remain in place until all paving, construction and heavy equipment is out of area.

Further information may be obtained from the Land Resource Specialists at 562-4575 and 562-4558.

DATE	REVISION DESCRIPTION	APP
10/22/18	PHONE NUMBERS	JS
5/17/12	DEPARTMENT NAME	TLM

CITY OF CLEARWATER
ENGINEERING DEPARTMENT
LANDSCAPE DETAILS

TREE BARRICADES

INDEX NO. 909 | PAGE NO. 1 OF 1 | LATEST REVISION 10/22/18

CONTRACTOR'S RESPONSIBILITY
Erosion and Sedimentation controls are performance based criteria. If the BMPs provided do not prevent soils from leaving a construction site, then the Contractor is required to employ additional procedures to provide clean runoff from a site.

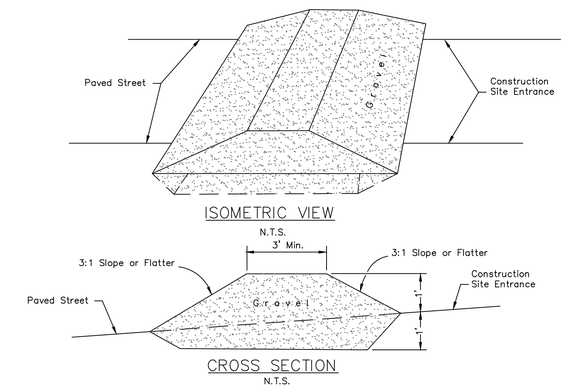

DATE	REVISION DESCRIPTION	APP
5/18/15	CONTRACTOR NOTE ADDED	S.R.

CITY OF CLEARWATER
ENGINEERING DEPARTMENT
EROSION AND SILTATION CONTROL POLICY

TEMPORARY EROSION CONTROL GRAVEL INTERCEPTOR BERM

INDEX NO. 601 | PAGE NO. 1 OF 1 | LATEST REVISION 2/22/2016

© COPYRIGHT 2010 KING ENGINEERING ASSOCIATES, INC. DRAWINGS AND CONCEPTS MAY NOT BE USED OR REPRODUCED WITHOUT WRITTEN PERMISSION CONSENT IS HEREBY GRANTED SPECIFICALLY TO GOVERNMENTAL AGENCIES TO REPRODUCE THIS DOCUMENT IN COMPLIANCE WITH F.S. CHAPTER 119.

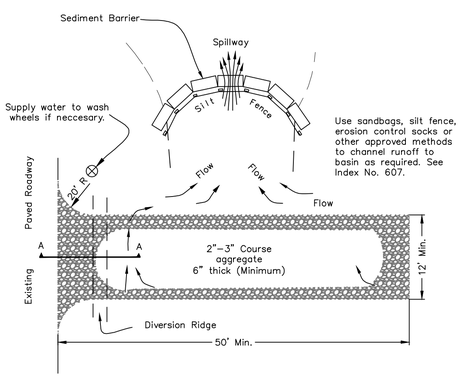

PLAN VIEW

N.T.S.

CONTRACTOR'S RESPONSIBILITY
Erosion and Sedimentation controls are performance based criteria. If the BMPs provided do not prevent soils from leaving a construction site, then the Contractor is required to employ additional procedures to provide clean runoff from a site.

NOTES:

1. The entrance shall be maintained in a condition that will prevent tracking or flowing of sediment onto Public Right-of-Way. This may require top dressing, repair and/or cleaning of any measures used to trap sediment.
2. When necessary, wheels shall be cleaned prior to entrance onto Public Right-of-Way.
3. When washing is required, it shall be done on an area stabilized with crushed stone that drains into an approved sediment trap or sediment basin.

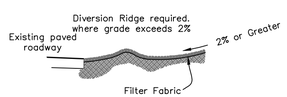

SECTION A – A

N.T.S.

DATE	REVISION DESCRIPTION	APP
5/18/15	CONTRACTOR NOTE ADDED	S.R.

CITY OF CLEARWATER
ENGINEERING DEPARTMENT
EROSION AND SILTATION CONTROL POLICY

TEMPORARY EROSION CONTROL DIVERSION BERM

INDEX NO. 602 | PAGE NO. 2 OF 2 | LATEST REVISION 2/22/2016

CONTRACTOR'S RESPONSIBILITY
Erosion and Sedimentation controls are performance based criteria. If the BMPs provided do not prevent soils from leaving a construction site, then the Contractor is required to employ additional procedures to provide clean runoff from a site.

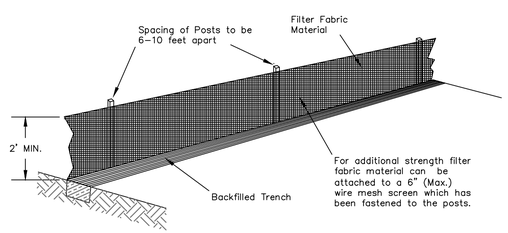

N.T.S.

ATTACHING TWO SILT FENCES

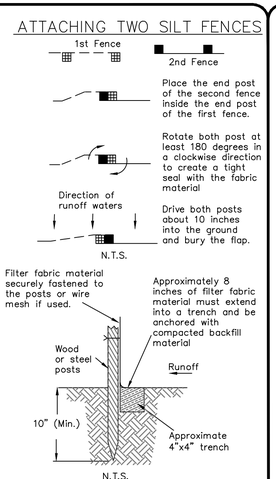

DATE	REVISION DESCRIPTION	APP
5/18/15	CONTRACTOR NOTE ADDED	S.R.

CITY OF CLEARWATER
ENGINEERING DEPARTMENT
EROSION AND SILTATION CONTROL POLICY

INSTALLING A FILTER FABRIC SILT FENCE

INDEX NO. 607 | PAGE NO. 1 OF 3 | LATEST REVISION 2/22/2016

CONTRACTOR'S RESPONSIBILITY
Erosion and Sedimentation controls are performance based criteria. If the BMPs provided do not prevent soils from leaving a construction site, then the Contractor is required to employ additional procedures to provide clean runoff from a site.

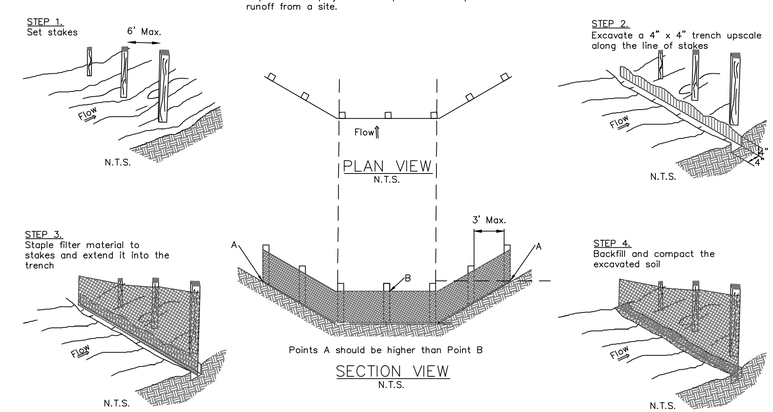

DATE	REVISION DESCRIPTION	APP
5/18/15	CONTRACTOR NOTE ADDED	S.R.

CITY OF CLEARWATER
ENGINEERING DEPARTMENT
EROSION AND SILTATION CONTROL POLICY

INSTALLING A FILTER FABRIC SILT FENCE

INDEX NO. 607 | PAGE NO. 2 OF 3 | LATEST REVISION 2/22/2016

BID DOCUMENTS

IF THIS BAR DOES NOT MEASURE 1" THEN DRAWING HAS BEEN REDUCED SCALE ACCORDINGLY 0 1"

King
ENGINEERING ASSOCIATES, INC.
4921 Memorial Highway
One Memorial Center, Suite 300
Tampa, Florida 33634
Phone 813 880-8881
Fax 813 880-8882
www.kingengineering.com
Engineering License #2610

RECORD DRAWINGS
SURVEYED BY: DRAWN BY:
REVIEWED BY: PROJECT ENGINEER DATE
APPROVED BY: ENGINEER DATE

REVISION	BY	DATE

CITY OF CLEARWATER, FLORIDA
ENGINEERING DEPARTMENT
100 S. MYRTLE AVE.
CLEARWATER, FL 33756

INVESTIGATE BEFORE YOU EXCAVATE
CALL 811
SUNSHINE STATE ONE CALL OF FLORIDA
www.callsunshine.com
(800) 432-4770
MIN. 48 HOURS BEFORE YOU EXCAVATE

NORTHEAST WRF GRIT REMOVAL, MOVING BELT FILTER AND EQUALIZATION SYSTEM IMPROVEMENTS

PROPOSED PAVING, GRADING, AND DRAINAGE DETAILS (1)

DWG NAME: DETAILS	FIELD BOOK:	SURVEYED BY:	SCALE: VERT. N/A
CONTRACT NO.: 15-0045-UT	DATE DRAWN: MARCH 2016	DRAWN BY: MJG	HORIZ. AS SHOWN
JOB NO.: 2110-210-002	DESIGNED BY: LVM	CHECKED BY: TAT	SHEET NO.: 22 of 117

APPROVED FOR CONSTRUCTION

O:\ENV_ENG\2110\210\002\Production\Drawings\DETAILS.dwg, March 26, 2020 1:47 PM, King Engineering Associate Inc.

CONTRACTOR'S RESPONSIBILITY
Erosion and Sedimentation controls are performance based criteria. If the BMPs provided do not prevent soils from leaving a construction site, then the Contractor is required to employ additional procedures to provide clean runoff from a site.

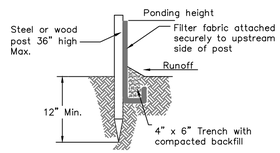

STANDARD DETAIL
TRENCH WITH NATIVE BACKFILL

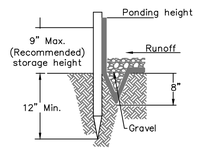

ALTERNATE DETAIL
TRENCH WITH GRAVEL

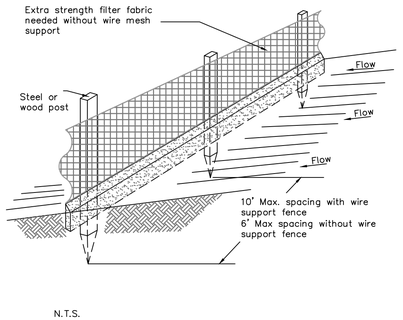

N.T.S.

NOTES:
1. Inspect and repair fence after each storm event and remove sediment when necessary.
2. Removed sediment shall be deposited to an area that will not contribute sediment off-site and can be permanently stabilized.
3. Silt fence shall be placed on slope contours to maximize ponding efficiency.

DATE	REVISION DESCRIPTION	APP
5/18/15	CONTRACTOR NOTE ADDED	S.R.

CITY OF CLEARWATER
ENGINEERING DEPARTMENT
EROSION AND SILTATION CONTROL POLICY

INSTALLING A
FILTER FABRIC SILT FENCE

INDEX NO. 607 | PAGE NO. 3 OF 3
LATEST REVISION 2/22/2016

CONTRACTOR'S RESPONSIBILITY
Erosion and Sedimentation controls are performance based criteria. If the BMPs provided do not prevent soils from leaving a construction site, then the Contractor is required to employ additional procedures to provide clean runoff from a site.

NOTES:
1. Drop inlet sediment barriers are to be used for small, nearly level drainage areas. (Less than 5%).
2. Use 2"x4" wood or equivalent metal stakes. (3' Min. length).
3. Install 2"x4" wood top frame to insure stability.
4. The top of the frame (ponding height) must be well below the ground elevation downslope to prevent runoff from bypassing the inlet. A temporary dike may be necessary on the downslope side of the structure.
5. Mirafi or approved erosion control fabric shall be wrapped around grate.
6. The method shall not apply to inlets receiving concentrated flows, such as in street or highway medians.

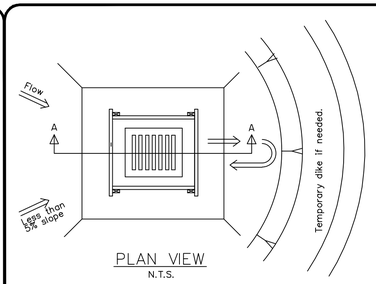

PLAN VIEW
N.T.S.

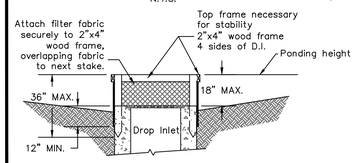

SECTION A–A
N.T.S.

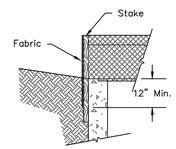

DETAIL OF STAKE & FABRIC ORIENTATION
N.T.S.

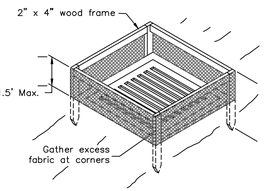

ISOMETRIC VIEW
N.T.S.

DATE	REVISION DESCRIPTION	APP
5/18/15	CONTRACTOR NOTE ADDED	S.R.

CITY OF CLEARWATER
ENGINEERING DEPARTMENT
EROSION AND SILTATION CONTROL POLICY

TEMPORARY SEDIMENT BARRIER
AT A DROP INLET

INDEX NO. 608 | PAGE NO. 1 OF 2
LATEST REVISION 2/22/2016

CONTRACTOR'S RESPONSIBILITY
Erosion and Sedimentation controls are performance based criteria. If the BMPs provided do not prevent soils from leaving a construction site, then the Contractor is required to employ additional procedures to provide clean runoff from a site.

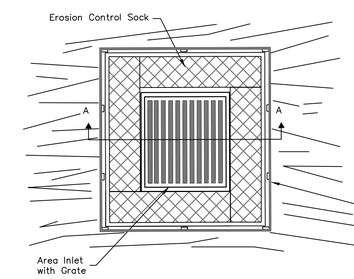

PLAN VIEW
N.T.S.

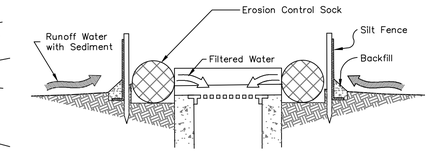

SECTION A–A
N.T.S.

This method of inlet protection is applicable where the inlet drains a relatively flat area (slopes no greater than 5%) where sheet or overland flows (not exceeding 0.5 cfs) are typical. The method shall not apply to inlets receiving concentrated flows, such as street or highway medians.

DATE	REVISION DESCRIPTION	APP
5/18/15	CONTRACTOR NOTE ADDED	S.R.

CITY OF CLEARWATER
ENGINEERING DEPARTMENT
EROSION AND SILTATION CONTROL POLICY

TEMPORARY SEDIMENT BARRIER
AT STORM DRAIN DROP INLET

INDEX NO. 608 | PAGE NO. 2 OF 2
LATEST REVISION 2/22/2016

CONTRACTOR'S RESPONSIBILITY
Erosion and Sedimentation controls are performance based criteria. If the BMPs provided do not prevent soils from leaving a construction site, then the Contractor is required to employ additional procedures to provide clean runoff from a site.

LEGEND:
- * This distance is variable
- Stake or anchor every 100' (typical)
- Anchor & anchor buoy
- Barrier movement due to tidal change
- Fill area

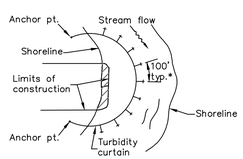

TYPICAL LAYOUT STREAMS, PONDS, AND LAKES (PROTECTED AND NON–TIDAL)
PLAN VIEW

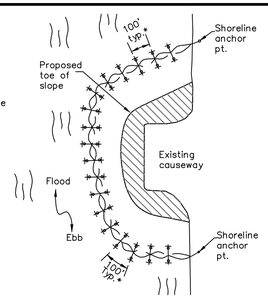

TYPICAL LAYOUT TIDAL WATERS AND/OR HEAVY WIND AND WAVE ACTION
PLAN VIEW

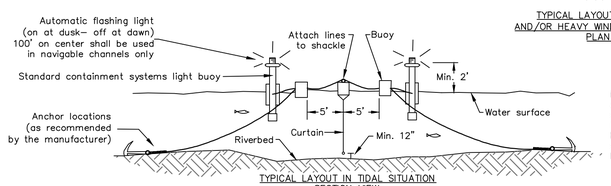

TYPICAL LAYOUT IN TIDAL SITUATION
SECTION VIEW

NOTE:
Anchoring with buoys, as shown, removes all vertical forces from the curtain. hence, the curtain will not sink from wind or current loads.

N.T.S.

DATE	REVISION DESCRIPTION	APP
5/18/15	CONTRACTOR NOTE ADDED	S.R.

CITY OF CLEARWATER
ENGINEERING DEPARTMENT
EROSION AND SILTATION CONTROL POLICY

TYPICAL INSTALLATION LAYOUTS
OF FLOATING TURBIDITY BARRIERS

INDEX NO. 609 | PAGE NO. 1 OF 1
LATEST REVISION 2/22/2016

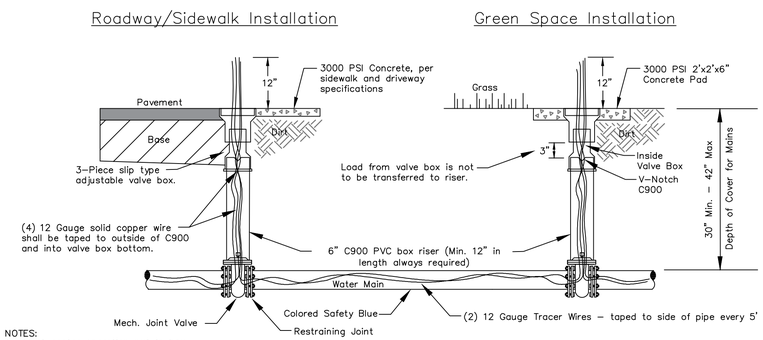

NOTES:
1. Must center operation nut in box.
2. C900 Riser to be one continuous section and color coded "Safety Blue."
3. Gate Valves shall be open left only.
4. Valve key extensions required on valves with operator nut over 3' deep.
5. Tracer Wire required in all applications including on D.I.P. and colored "Safety Blue."
6. See also City of Clearwater's Technical Specification Section IV.

SECTION VIEW
N.T.S.

DATE	REVISION DESCRIPTION	APP

CITY OF CLEARWATER
ENGINEERING DEPARTMENT
POTABLE WATER DETAILS

TYPICAL VALVE AND BOX SETTING

INDEX NO. 402 | PAGE NO. 1 OF 3
LATEST REVISION 10/21/2019

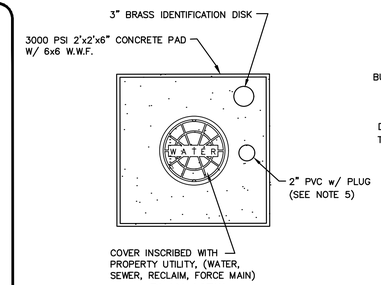

PLAN VIEW

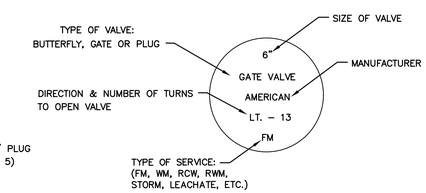

3" BRASS IDENTIFICATION DISK

NOTES:
1. EXTENSION ON VALVE BOX SHALL BE SET SO AS TO RESERVE 1/2 OF THE ADJUSTMENT LENGTH FOR FUTURE USE.
2. OPERATING NUT SHALL BE SET SO AS TO BE WITHIN 12" TO 18" OF GRADE.
3. INSTALL 3" BRASS IDENTIFICATION DISK IN CONCRETE.
4. INSTALL 2" PVC WITH PLUG FOR TRACER WIRE STORAGE.
5. LOCATOR WIRE ACCESS – 2" (WHITE OR GRAY) SCHEDULE 80 PVC, BRASS FEMALE ADAPTOR COUPLING AND 2" BRASS PLUG W/ RECESS NUT. TERMINATE INSULATED, SOLID 12 GAUGE COPPER TRACER WIRE AT TOP W/ A MINIMUM 12" OF EXTRA WIRE.
6. RECLAIMED WATER VALVE BOX LID OPENINGS ARE TO BE 6" X 6" SQUARE.

TYPICAL VALVE BOX CONCRETE PAD DETAIL
N.T.S.

BID DOCUMENTS

IF THIS BAR DOES NOT MEASURE 1" THEN DRAWING HAS BEEN REDUCED SCALE ACCORDINGLY
0 1"

King
ENGINEERING ASSOCIATES, INC.
4921 Memorial Highway
One Memorial Center, Suite 300
Tampa, Florida 33634
Phone 813 880-8881
Fax 813 880-8882
www.kingengineering.com
Engineering License #2610

RECORD DRAWINGS
SURVEYED BY: | DRAWN BY:
REVIEWED BY: PROJECT ENGINEER | DATE
APPROVED BY: ENGINEER | DATE

REVISION	BY	DATE

CITY OF CLEARWATER, FLORIDA
ENGINEERING DEPARTMENT
100 S. MYRTLE AVE.
CLEARWATER, FL 33756

INVESTIGATE BEFORE YOU EXCAVATE
CALL 811
SUNSHINE STATE ONE CALL OF FLORIDA
www.callsunshine.com
(800) 432–4770
MIN. 48 HOURS BEFORE YOU EXCAVATE

NORTHEAST WRF GRIT REMOVAL, MOVING BELT FILTER AND EQUALIZATION SYSTEM IMPROVEMENTS

PROPOSED PAVING, GRADING, AND DRAINAGE DETAILS (2)

DWG NAME: DETAILS	FIELD BOOK:	SURVEYED BY:	SCALE: VERT. N/A
CONTRACT NO.: 15–0045–UT	DATE DRAWN: MARCH 2016	DRAWN BY: MJG	HORIZ. AS SHOWN
JOB NO.: 2110–210–002	DESIGNED BY: LVM	CHECKED BY: TAT	SHEET NO.: 23 of 117

APPROVED FOR CONSTRUCTION

© COPYRIGHT 2010 KING ENGINEERING ASSOCIATES, INC. DRAWINGS AND CONCEPTS MAY NOT BE USED OR REPRODUCED WITHOUT WRITTEN PERMISSION. CONSENT IS HEREBY GRANTED SPECIFICALLY TO GOVERNMENTAL AGENCIES TO REPRODUCE THIS DOCUMENT IN COMPLIANCE WITH F.S. CHAPTER 119.

O:\ENV_ENG\2110\210\002\Production\Drawings\DETAILS.dwg, March 26, 2020 1:48 PM, King Engineering Associate Inc.

NOTES:
1. Extension on valve box shall be set so as to reserve 1/2 of the adjustment length for future use.
2. Install 3" brass identification disk in concrete, per detail below.
3. Terminate insulated, solid 12 gauge copper tracer wire 12" above box cover.
4. Valve Box to be centered in concrete slab in green space only.
5. See also City of Clearwater's Technical Specification Section IV.

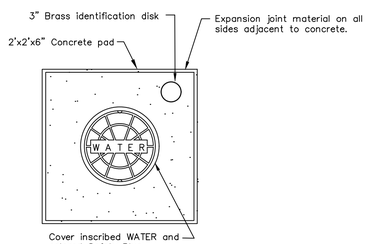

WATER VALVE BOX
CONCRETE PAD PLAN VIEW
N.T.S.

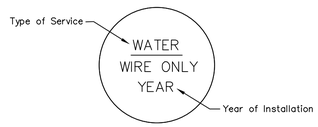

3" BRASS IDENTIFICATION DISK
N.T.S.

DATE	REVISION DESCRIPTION	APP

CITY OF CLEARWATER
ENGINEERING DEPARTMENT
POTABLE WATER DETAILS

POTABLE WATER TRACING WIRE STATION
CONCRETE PAD PLAN VIEW
GREEN SPACE ONLY

INDEX NO. 402 | PAGE NO. 3 OF 3
LATEST REVISION 10/21/2019

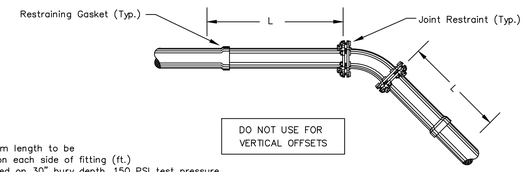

L = Minimum length to be restrained on each side of fitting (ft.)
Figures based on 30" bury depth, 150 PSI test pressure
Figures apply to poly wrapped pipe

N.T.S.

NOM. PIPE SIZE	ELBOWS (deg.)				VALVES TEES	DEAD END
	11.25	22.50	45	90		
LENGTH IN FEET (L)						
4"	22	22	22	42	50	50
6"	22	22	25	50	67	67
8"	22	22	35	60	85	85
12"	22	22	42	100	125	125
16"	22	30	55	130	150	150
20"	22	33	65	150	160	160

The following joints must be restrained in all applications:
1. Bend – inlet and outlet
2. Tee – inlet and outlets
3. Offsets – inlet and outlet
4. Caps
5. Plugs
6. Dead ends
7. Hydrant runouts shall be restrained as dead ends

NOTES:
1. Water mains larger than 8" will be ductile iron pipe only.
2. Thrust restraint on slip joint ductile iron pipe shall be U.S. Pipe Field Lock Gaskets for Tyton Joint Pipe or American Fast–Grip Gaskets for American Fastite Pipe, witnessed by Construction Inspector.
3. Thrust restraints on slip joint PVC pipe shall be EBBA iron 1500 Series restrainers, or approved equal.
4. Thrust restraint on Ductile Iron Fittings shall be provided by the use of Megalug Retainers and mechanical joint fittings.
5. No thrust blocks allowed.
6. See also City of Clearwater's Technical Specification Section IV.

DATE	REVISION DESCRIPTION	APP

CITY OF CLEARWATER
ENGINEERING DEPARTMENT
POTABLE WATER DETAILS

RESTRAINED JOINT DETAIL
(PVC & DIP)

INDEX NO. 403 | PAGE NO. 1 OF 1
LATEST REVISION 10/21/2019

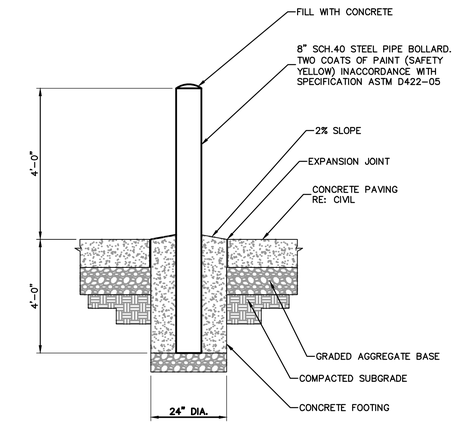

CONCRETE FILLED BOLLARD DETAIL
N.T.S.

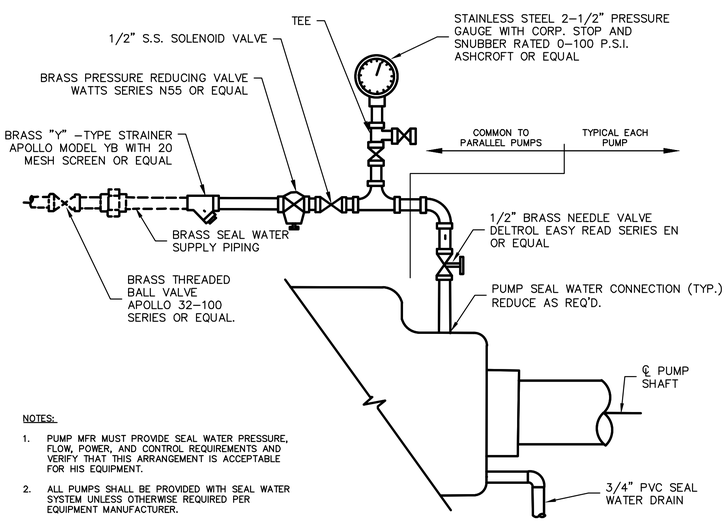

NOTES:
1. PUMP MFR MUST PROVIDE SEAL WATER PRESSURE, FLOW, POWER, AND CONTROL REQUIREMENTS AND VERIFY THAT THIS ARRANGEMENT IS ACCEPTABLE FOR HIS EQUIPMENT.
2. ALL PUMPS SHALL BE PROVIDED WITH SEAL WATER SYSTEM UNLESS OTHERWISE REQUIRED PER EQUIPMENT MANUFACTURER.
3. CONTRACTOR SHALL PROVIDE ALL PIPING FOR CONNECTION TO PLANT RECLAIMED WATER SUPPLY AND POWER/CONTROL.

SEAL WATER PIPING DETAIL
N.T.S.
(SEE NOTE 3)

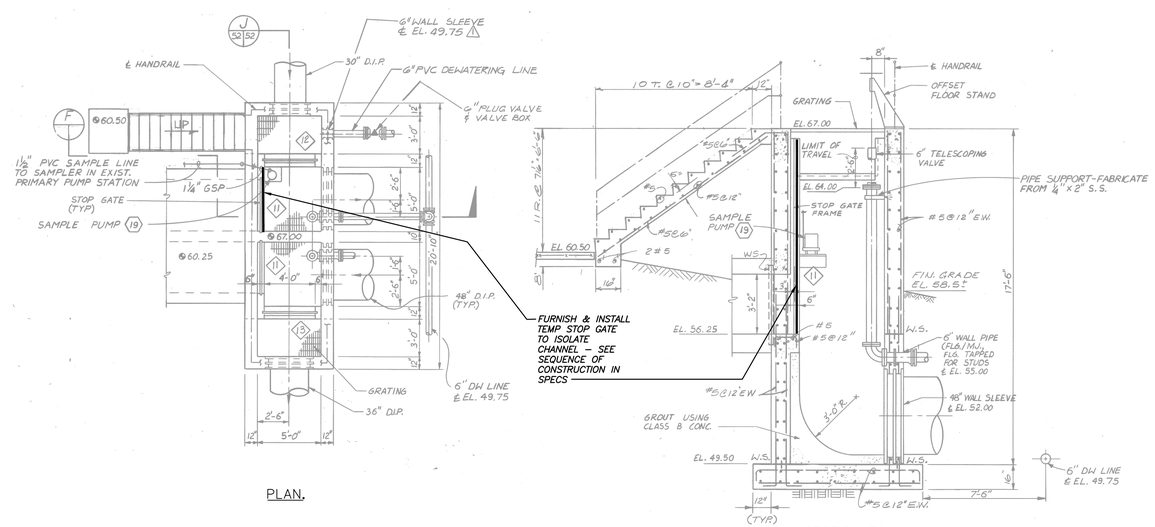

EXISTING DIVERSION STRUCTURE DETAIL – PLAN AND SECTION
N.T.S.

BID DOCUMENTS

IF THIS BAR DOES NOT MEASURE 1" THEN DRAWING HAS BEEN REDUCED SCALE ACCORDINGLY

King
ENGINEERING ASSOCIATES, INC.
4921 Memorial Highway
One Memorial Center, Suite 300
Tampa, Florida 33634
Phone 813 880-8881
Fax 813 880-8882
www.kingengineering.com
Engineering License #2610

RECORD DRAWINGS
SURVEYED BY: | DRAWN BY:
REVIEWED BY: PROJECT ENGINEER | DATE
APPROVED BY: ENGINEER | DATE

REVISION	BY	DATE

CITY OF CLEARWATER, FLORIDA
ENGINEERING DEPARTMENT
100 S. MYRTLE AVE.
CLEARWATER, FL 33756

INVESTIGATE BEFORE YOU EXCAVATE
CALL 811
SUNSHINE STATE ONE CALL OF FLORIDA
www.callsunshine.com
(800) 432-4770
MIN. 48 HOURS BEFORE YOU EXCAVATE

NORTHEAST WRF GRIT REMOVAL, MOVING BELT FILTER AND EQUALIZATION SYSTEM IMPROVEMENTS

MISCELLANEOUS DETAILS (1)

DWG NAME: DETAILS	FIELD BOOK:	SURVEYED BY:	SCALE: VERT. N/A
CONTRACT NO.: 15–0045–UT	DATE DRAWN: MARCH 2016	DRAWN BY: MJG	HORIZ. AS SHOWN
JOB NO.: 2110–210–002	DESIGNED BY: LVM	CHECKED BY: TAT	SHEET NO.: 24 of 117

APPROVED FOR CONSTRUCTION

© COPYRIGHT 2013 KING ENGINEERING ASSOCIATES, INC. DRAWINGS AND CONCEPTS MAY NOT BE USED OR REPRODUCED WITHOUT WRITTEN PERMISSION. CONSENT IS HEREBY GRANTED SPECIFICALLY TO GOVERNMENTAL AGENCIES TO REPRODUCE THIS DOCUMENT IN COMPLIANCE WITH F.S. CHAPTER 119.

O:\ENV_ENG\2110\210\002\Production\Drawings\DETAILS.dwg, March 26, 2020 1:48 PM, King Engineering Associate Inc.

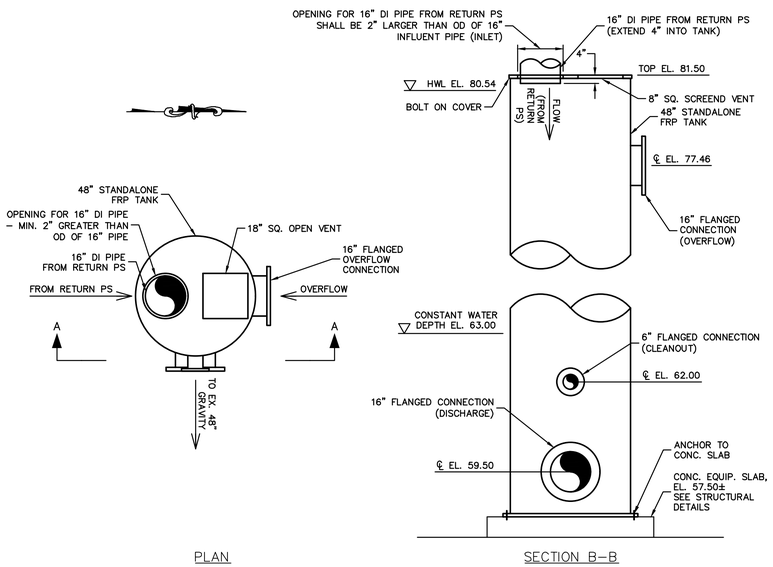

FRP TANK DETAIL

N.T.S.

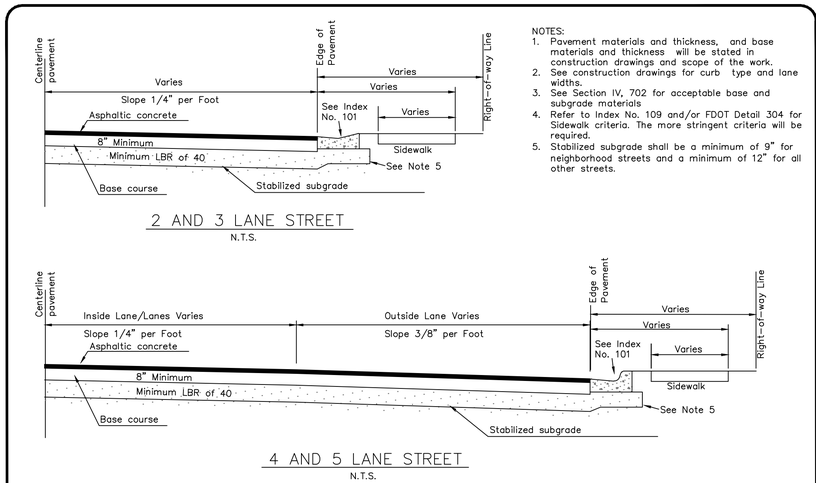

NOTES:
1. Pavement materials and thickness, and base materials and thickness will be stated in construction drawings and scope of the work.
2. See construction drawings for curb type and lane widths.
3. See Section IV, 702 for acceptable base and subgrade materials
4. Refer to Index No. 109 and/or FDOT Detail 304 for Sidewalk criteria. The more stringent criteria will be required.
5. Stabilized subgrade shall be a minimum of 9" for neighborhood streets and a minimum of 12" for all other streets.

DATE	REVISION DESCRIPTION	APP
2/24/17	ADDED NOTE	JWS
9/9/15	ADDED SIDEWALKS & ROW DETAIL TO DRAWING	J.S.

CITY OF CLEARWATER
ENGINEERING DEPARTMENT
STREET SECTIONS AND DETAILS

TYPICAL STREET SECTION

INDEX NO. 102 | PAGE NO. 1 OF 1 | LATEST REVISION 02/24/17

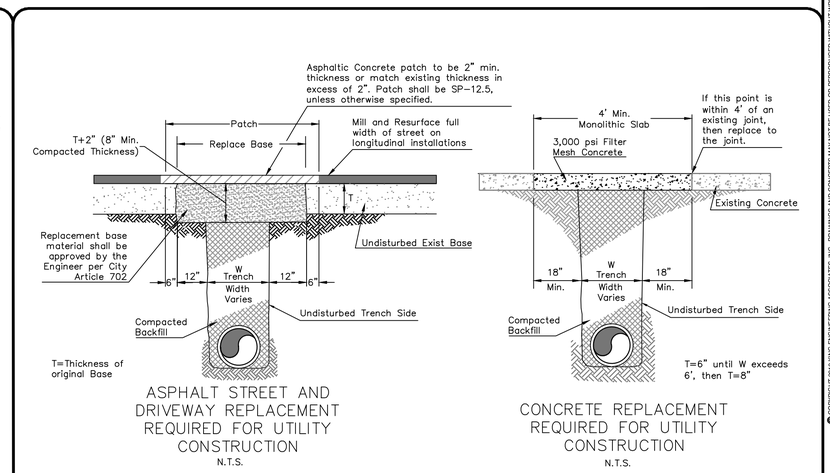

DATE	REVISION DESCRIPTION	APP
3/17/11	ASPHALTIC CONC. PATCH & RESURFACE NOTE	D.S.R.

CITY OF CLEARWATER
ENGINEERING DEPARTMENT
STREET SECTIONS AND DETAILS

TEMPORARY AND PERMANENT SURFACE REPLACEMENT FOR UTILITY CONSTRUCITON

INDEX NO. 104 | PAGE NO. 1 OF 1 | LATEST REVISION 2/22/2016

© COPYRIGHT 2010 KING ENGINEERING ASSOCIATES, INC. DRAWINGS AND CONCEPTS MAY NOT BE USED OR REPRODUCED WITHOUT WRITTEN PERMISSION CONSENT IS HEREBY GRANTED SPECIFICALLY TO GOVERNMENTAL AGENCIES TO REPRODUCE THIS DOCUMENT IN COMPLIANCE WITH F.S. CHAPTER 119.

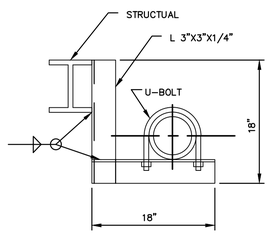

16" TANK OVERFLOW LINE SUPPORT

N.T.S.

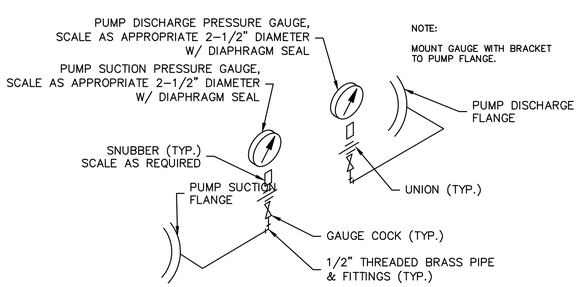

PUMP PRESSURE GAUGE SCHEMATIC

N.T.S.

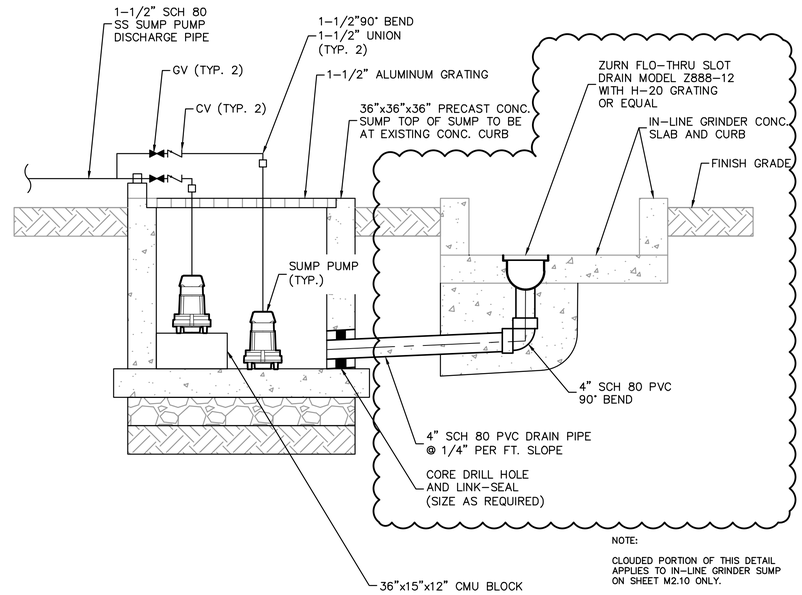

NOTE:
CLOUDED PORTION OF THIS DETAIL APPLIES TO IN–LINE GRINDER SUMP ON SHEET M2.10 ONLY.

36"x36"x36" PRECAST SUMP DETAILS

N.T.S.

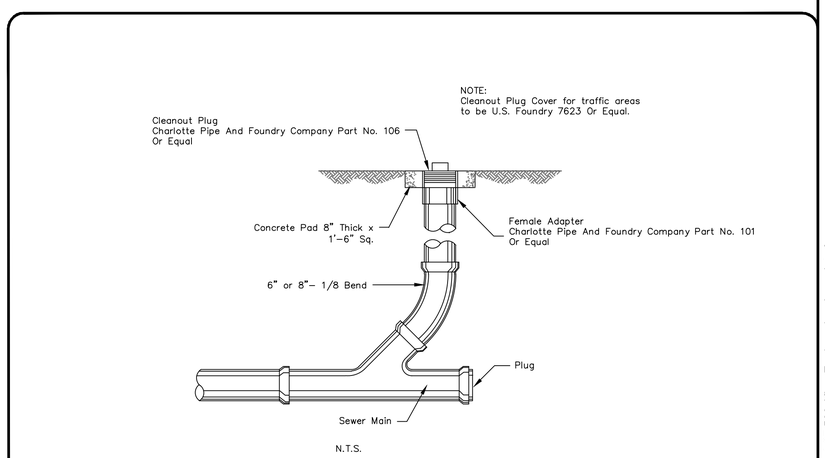

DATE	REVISION DESCRIPTION	APP

CITY OF CLEARWATER
ENGINEERING DEPARTMENT
SANITARY SEWER DETAILS

STANDARD TERMINAL END CLEANOUT (SANITARY)

INDEX NO. 304 | PAGE NO. 2 OF 2 | LATEST REVISION 2/22/2016

BID DOCUMENTS

IF THIS BAR DOES NOT MEASURE 1" THEN DRAWING HAS BEEN REDUCED SCALE ACCORDINGLY 0 1"

King
ENGINEERING ASSOCIATES, INC.
4921 Memorial Highway
One Memorial Center, Suite 300
Tampa, Florida 33634
Phone 813 880-8881
Fax 813 880-8882
www.kingengineering.com
Engineering License #2610

RECORD DRAWINGS				
SURVEYED BY:	DRAWN BY:			
REVIEWED BY: PROJECT ENGINEER	DATE			
APPROVED BY: ENGINEER	DATE	REVISION	BY	DATE

CITY OF CLEARWATER, FLORIDA
ENGINEERING DEPARTMENT
100 S. MYRTLE AVE.
CLEARWATER, FL 33756

INVESTIGATE BEFORE YOU EXCAVATE
CALL 811
SUNSHINE STATE ONE CALL OF FLORIDA
www.callsunshine.com
(800) 432–4770
MIN. 48 HOURS BEFORE YOU EXCAVATE

NORTHEAST WRF GRIT REMOVAL, MOVING BELT FILTER AND EQUALIZATION SYSTEM IMPROVEMENTS

MISCELLANEOUS DETAILS (2)

DWG NAME: DETAILS	FIELD BOOK:	SURVEYED BY:	SCALE: VERT. N/A
CONTRACT NO.: 15–0045–UT	DATE DRAWN: MARCH 2016	DRAWN BY: MJG	HORIZ. AS SHOWN
JOB NO.: 2110–210–002	DESIGNED BY: LVM	CHECKED BY: TAT	SHEET NO.: 25 of 117
APPROVED FOR CONSTRUCTION			

O:\ENV_ENG\2110\210\002\Production\Drawings\DETAILS.dwg, March 26, 2020 4:07 PM, King Engineering Associate Inc.

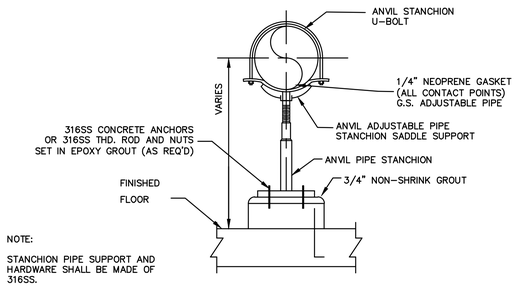

NOTE:

STANCHION PIPE SUPPORT AND HARDWARE SHALL BE MADE OF 316SS.

ADJUSTABLE PIPE STANCHION DETAIL
N.T.S.

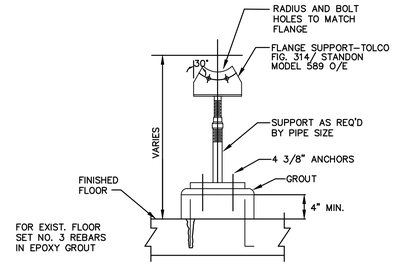

ADJUSTABLE FLANGE PIPE SUPPORT DETAIL
N.T.S.

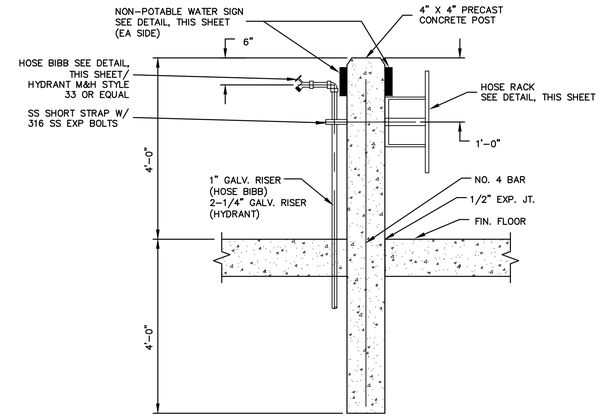

POST MOUNTED HOSE BIBB/POST HYDRANT DETAIL
N.T.S.

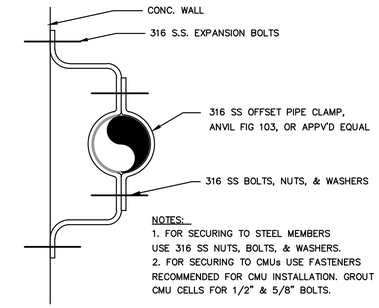

NOTES:
1. FOR SECURING TO STEEL MEMBERS USE 316 SS NUTS, BOLTS, & WASHERS.
2. FOR SECURING TO CMUs USE FASTENERS RECOMMENDED FOR CMU INSTALLATION. GROUT CMU CELLS FOR 1/2" & 5/8" BOLTS.

DUCTILE IRON/PVC PIPE CLAMP DETAIL
N.T.S.

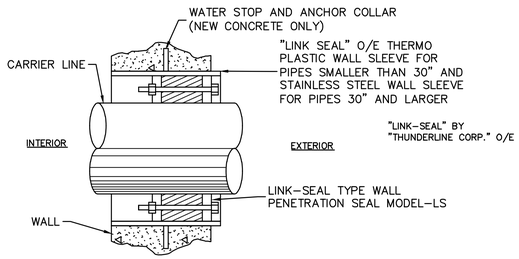

NOTES:

1. ALL METAL PARTS OF WALL PENETRATION SEAL SHALL BE 316 STAINLESS STEEL (INCLUDING BOLTS, NUTS AND WASHERS.)
2. ALL METAL PARTS OF WALL PENETRATION SEAL SHALL BE 316 STAINLESS STEEL (INCLUDING BOLTS, NUTS AND WASHERS.)
3. WALL OPENINGS FOR PIPES 4" & SMALLER SHALL BE CORE BIT DRILLED - ANY EXPOSED REINFORCING BARS SHALL BE EPOXY COATED.
4. FOR PIPES SMALLER THAN 2" IN DRY INSTALLATIONS, NO SLEEVEREQD. CORE DRILL & GROUT ANNULUS W/ NONSHRINK GROUT.

WALL PENETRATION DETAIL
N.T.S.

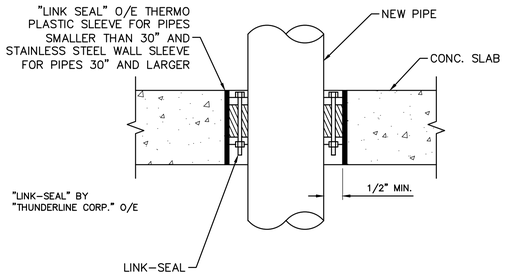

FLOOR PENETRATION DETAIL
N.T.S.

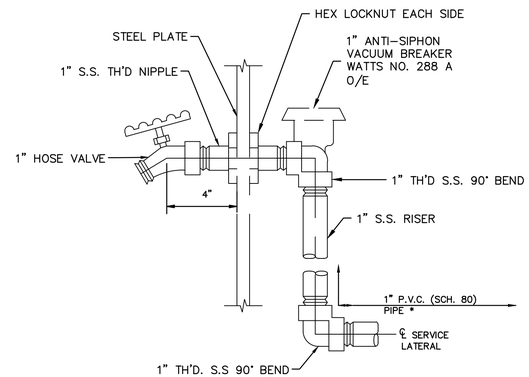

HOSE BIBB DETAIL
N.T.S.

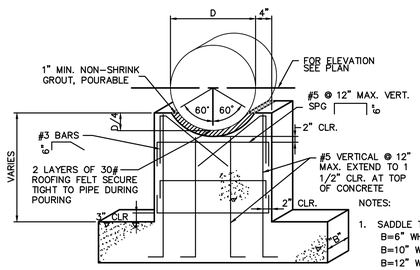

NOTES:

1. SADDLE THICKNESS = "B"
   B=6" WHEN D < 24"
   B=10" WHEN D >24" BUT < 42"
   B=12" WHEN D > 42"
2. WHEN "B"=10" OR THICKER, USE 2 LAYERS OF REINF. 1 1/2" CLR. OF CONCRETE

CONCRETE PIPE SUPPORT DETAIL
N.T.S.

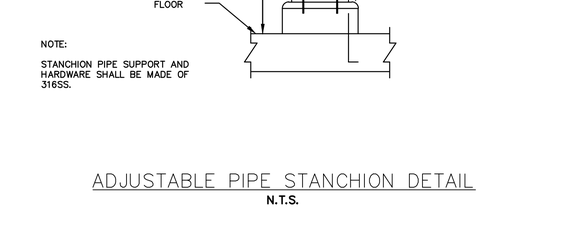

COLORS: BACKGROUND SHALL BE OSHA SAFETY YELLOW. LETTERS SHALL BE RECESSED BLACK.

NON-POTABLE WATER SIGN DETAIL
N.T.S.

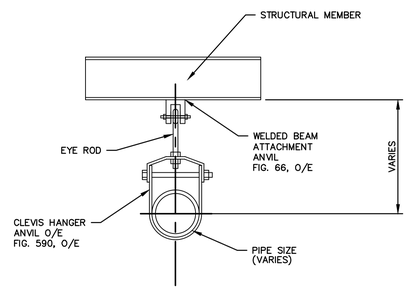

PIPE HANGER DETAIL
N.T.S.

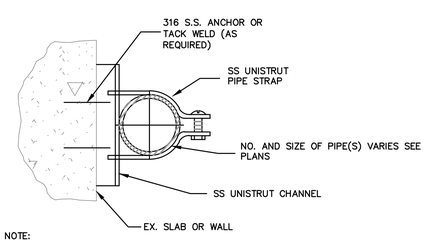

NOTE:

1. ALL PVC PIPES 2"-4" IN DIAMETER SHALL BE SUPPORTED @ 48" O.C. IN THE HORIZONTAL, @ 36" O.C. IN THE VERTICAL.
2. THE EDGES/CORNERS OF ALL CUT UNISTRUT/METAL SHALL BE FILED SMOOTH.

UNISTRUT PIPE SUPPORT DETAIL
N.T.S.

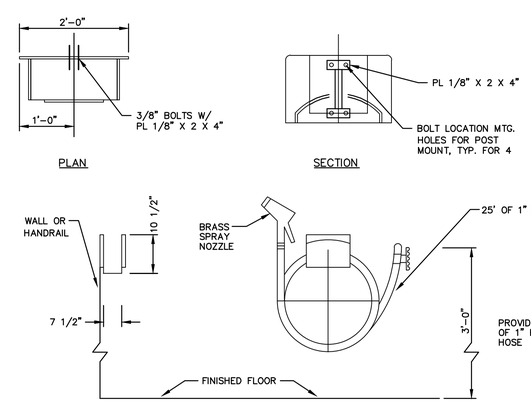

HOSE RACK DETAIL
N.T.S.

IF THIS BAR DOES NOT MEASURE 1" THEN DRAWING HAS BEEN REDUCED SCALE ACCORDINGLY

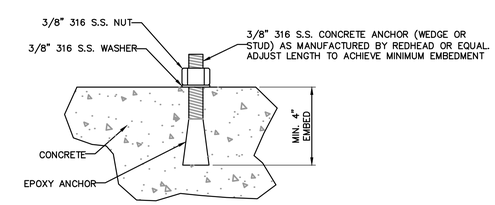

CONCRETE ANCHORING DETAIL
N.T.S.

BID DOCUMENTS

King
ENGINEERING ASSOCIATES, INC.
4921 Memorial Highway
One Memorial Center, Suite 300
Tampa, Florida 33634
Phone 813 880-8881
Fax 813 880-8882
www.kingengineering.com
Engineering License #2610

RECORD DRAWINGS			
SURVEYED BY:	DRAWN BY:		
REVIEWED BY:			
PROJECT ENGINEER	DATE		
APPROVED BY:			
ENGINEER	DATE	REVISION	BY / DATE

CITY OF CLEARWATER, FLORIDA
ENGINEERING DEPARTMENT
100 S. MYRTLE AVE.
CLEARWATER, FL 33756

INVESTIGATE BEFORE YOU EXCAVATE
CALL 811
SUNSHINE STATE ONE CALL OF FLORIDA
www.callsunshine.com
(800) 432-4770
MIN. 48 HOURS BEFORE YOU EXCAVATE

NORTHEAST WRF GRIT REMOVAL, MOVING BELT FILTER AND EQUALIZATION SYSTEM IMPROVEMENTS

MISCELLANEOUS DETAILS (3)

DWG NAME: DETAILS	FIELD BOOK:	SURVEYED BY:	SCALE: VERT. N/A
CONTRACT NO.: 15-0045-UT	DATE DRAWN: MARCH 2016	DRAWN BY: MJG	HORIZ. AS SHOWN
JOB NO.: 2110-210-002	DESIGNED BY: LVM	CHECKED BY: TAT	SHEET NO.: 26 of 117

APPROVED FOR CONSTRUCTION

© COPYRIGHT 2010 KING ENGINEERING ASSOCIATES, INC. DRAWINGS AND CONCEPTS MAY NOT BE USED OR REPRODUCED WITHOUT WRITTEN PERMISSION. CONSENT IS HEREBY GRANTED SPECIFICALLY TO GOVERNMENTAL AGENCIES TO REPRODUCE THIS DOCUMENT IN COMPLIANCE WITH F.S. CHAPTER 119.

O:\ENV_ENG\2110\210\002\production\Drawings\DETAILS.dwg, March 18, 2020 2:25 PM, King Engineering Associate Inc.

GENERAL STRUCTURAL NOTES

GENERAL CONDITIONS

1. ALL STRUCTURAL DRAWINGS SHALL BE USED IN CONJUNCTION WITH THE MECHANICAL, CIVIL, ARCHITECTURAL, ELECTRICAL, HVAC, PLUMBING AND SHOP DRAWINGS AND SPECIFICATIONS.
2. THE CONTRACTOR SHALL REVIEW AND VERIFY DIMENSIONS SHOWN IN ALL PLANS AND REVIEW ALL FIELD CONDITIONS THAT MAY AFFECT THE WORK DEPICTED ON THE DRAWINGS. SHOULD DISCREPANCIES APPEAR, THE CONTRACTOR SHALL NOTIFY THE ENGINEER IN WRITING TO OBTAIN ENGINEER'S CLARIFICATION BEFORE COMMENCING WITH THE WORK.
3. FOR ALL ITEMS EMBEDDED IN OR PASSING THROUGH CONCRETE, THE CONTRACTOR SHALL INITIALLY REFER TO MECHANICAL, HVAC, AND PLUMBING DRAWINGS FOR TYPE, SIZE, LOCATION, AND SPECIAL INSTALLATION REQUIREMENTS FOR THESE ITEMS.
4. THE CONTRACTOR SHALL TAKE ALL NECESSARY MEASURES TO PROTECT EXISTING STRUCTURES FROM DAMAGE WHEN WORKING IN AND AROUND EXISTING STRUCTURES PERFORMING WORK SUCH AS DEMOLITION, FOUNDATION EXCAVATIONS, AND OTHERS.
5. SIZE AND LOCATION OF EQUIPMENT PADS AND ANCHOR BOLTS SHALL BE PER EQUIPMENT MANUFACTURER'S REQUIREMENTS.
6. ANY EQUIPMENT THAT MAY INDUCE VIBRATION TO THE STRUCTURE SHALL BE ADEQUATELY ISOLATED FROM THE STRUCTURE.
7. ALL DETAILS AND SECTIONS SHOWN ON THE DRAWINGS ARE INTENDED TO BE TYPICAL AND SHALL BE CONSTRUED TO APPLY TO ANY SIMILAR SITUATION ELSEWHERE ON THE PROJECT, EXCEPT WHERE A DIFFERENT DETAIL IS SHOWN.
8. STANDARD DETAILS APPLY TO ALL SIMILAR SITUATIONS ON THE PROJECT EXCEPT WHERE A DIFFERENT DETAIL IS SHOWN.

DESIGN CRITERIA

BUILDING CODES AND REFERENCES:

1. 2017 FLORIDA BUILDING CODE (FBC)
2. REINFORCED CONCRETE:

   WATER RETAINING ENVIRONMENTAL STRUCTURES: ACI 350-06 "CODE REQUIREMENTS FOR ENVIRONMENTAL ENGINEERING CONCRETE STRUCTURES"

   ALL OTHER STRUCTURES: ACI 318-14 "BUILDING CODE REQUIREMENTS FOR STRUCTURAL CONCRETE"
3. STRUCTURAL STEEL: AISC MANUAL OF STEEL CONSTRUCTION 14TH EDITION
4. ALUMINUM: ADM1-2010, ALUMINUM DESIGN MANUAL
5. LIVE LOADS:

   -PROCESS RELATED STRUCTURES:

WALKWAYS, STAIRWAYS AND LANDINGS:	100 PSF
ELEVATED SLABS AT PROCESS AREAS:	200 PSF
SLABS ON GRADE	300 PSF

   -BUILDINGS:

ROOF	20 PSF
STORAGE AREAS (HEAVY), ELECTRICAL ROOMS	300 PSF
STORAGE AREAS (LIGHT)	150 PSF
6. WIND DESIGN CRITERIA:

RISK CATEGORY	III
ULTIMATE DESIGN WIND SPEED, V_{ULT}	153 MPH
NOMINAL DESIGN WIND SPEED, V_{ASD}	124 MPH
EXPOSURE CATEGORY	C

FOUNDATIONS

GEOTECHNICAL REPORT:

1. GEOTECHNICAL REPORT BY DRIGGERS ENGINEERING SERVICES, INC. DATED MARCH 23, 2017, AND TITLED "REPORT OF THE GEOTECHNICAL INVESTIGATION PROPOSED EQUALIZATION TANK NORTHEAST WWTP, PINELLAS COUNTY, FLORIDA". ANY INTERPRETATION OF THE CONTENTS OF THE GEOTECHNICAL REPORT IS THE RESPONSIBILITY OF THE CONTRACTOR.

CONCRETE (CAST-IN-PLACE)

1. ALL MATERIALS AND METHODS OF CONSTRUCTION SHALL BE IN ACCORDANCE WITH ACI 318 REQUIREMENTS.
2. ALL CONCRETE SHALL BE AIR-ENTRANED WITH A MINIMUM OF 4,000 PSI COMPRESSIVE STRENGTH AT 28 DAYS UNLESS OTHERWISE NOTED.
3. WATER REDUCING AGENT SHALL BE IN ACCORDANCE WITH ASTM C494.
4. ALL CONCRETE SURFACES EXPOSED TO AIR, UNLESS OTHERWISE NOTED IN THE SPECIFICATIONS, SHALL BE TREATED WITH AN APPROPRIATE CURING COMPOUND AS SOON AS FINISHING IS COMPLETED OR FORMS ARE REMOVED.
5. ALL EXPOSED CORNERS SHALL HAVE A MINIMUM CHAMFER OF 3/4" UNLESS OTHERWISE NOTED.
6. THE CONTRACTOR SHALL OBTAIN ENGINEER'S APPROVAL FOR THE LOCATIONS OF CONSTRUCTION JOINTS THAT ARE NOT SHOWN ON THE DRAWINGS.

REINFORCING STEEL

1. REINFORCEMENT SHALL CONFORM TO ASTM A615, GRADE 60 REQUIREMENTS. WELDED WIRE FABRIC SHALL CONFORM TO ASTM A315 REQUIREMENTS. ALL ACCESSORIES SHALL BE IN CONFORMANCE WITH ACI 315 REQUIREMENTS.
2. REINFORCING STEEL SHALL HAVE THE FOLLOWING CLEAR COVER UNLESS OTHERWISE NOTED:

   a. CONCRETE CAST AGAINST EARTH — 3"

   b. FORMED SURFACE IN CONTACT WITH SOIL, SEWAGE, WATER OR EXPOSED TO WEATHER — 2"
3. LAP SPLICES SHALL BE AS SHOWN ON THE DRAWINGS. FOR LAP SPLICES NOT SHOWN ON THE DRAWINGS, THE CONTRACTOR SHALL OBTAIN ENGINEERS APPROVAL.
4. THE CONTRACTOR SHALL PREPARE PLACING DRAWINGS AND SCHEDULES IN CONFORMANCE WITH ACI 315 REQUIREMENTS.
5. UNLESS OTHERWISE NOTED, THE MINIMUM REINFORCING FOR WALLS AND SLABS SHALL BE AS FOLLOWS.

MINIMUM REINFORCING						
THICKNESS	6"	8"	10"	12" - 16"	18" - 22"	24"
REINF. EACH WAY	#4 @ 12"	#5 @12"	#5 @ 12"	#5 @ 12"	#6 @ 12"	#7 @ 12"
LOCATION	CTR	CTR	EF	EF	EF	EF

ALUMINUM

1. ALUMINUM DESIGN, DETAILING, FABRICATION, AND ERECTION SHALL CONFORM TO THE LATEST EDITION OF THE ALUMINUM DESIGN MANUAL.
2. ALUMINUM IN CONTACT WITH OR EMBEDDED IN CONCRETE OR MASONRY SURFACES SHALL BE COATED WITH A HEAVY COATING OF ALKALI RESISTANT BITUMINOUS PAINT.
3. ALL BOLTS USED IN CONNECTIONS WITH ALUMINUM MEMBERS SHALL BE STAINLESS STEEL A316, UNLESS NOTED OTHERWISE.
4. ALL WELDING OF ALUMINUM STRUCTURES SHALL CONFORM TO "STRUCTURAL WELDING CODE - ALUMINUM", AWS D1.2, LATEST EDITION.

STAINLESS STEEL

1. STAINLESS STEEL PLATES, SHEETS AND STRUCTURAL SHAPES SHALL BE IN ACCORDANCE TO ASTM A240.
2. STAINLESS STEEL MATERIALS SHALL BE AS FOLLOWS UNLESS NOTED OTHERWISE:

   a. EXTERIOR AND SUBMERGED USE: TYPE 316
      TYPE 316L (WHERE WELDED)

   a. INTERIOR AND ARCHITECTURAL USE : TYPE 304
      TYPE 304L (WHERE WELDED)
3. ALL WELDING OF STRUCTURAL STAINLESS STEEL SHALL CONFORM TO "STRUCTURAL WELDING CODE - STAINLESS STEEL", ASW D1.6, LATEST EDITION.
4. STAINLESS STEEL BOLTS, NUTS AND WASHERS SHALL BE TYPE 316 IN ACCORDANCE TO ASTM F593 UNLESS NOTED OTHERWISE.

FLOTATION CONSIDERATION

1. STRUCTURES WERE DESIGNED TO BE NON-BUOYANT AFTER THEY ARE PLACED INTO OPERATION. THEREFORE THE STRUCTURES MAY BE BUOYANT DURING CONSTRUCTION. GENERAL CONTRACTOR SHALL PROTECT ALL STRUCTURES FROM FLOTATION DURING CONSTRUCTION REGARDLESS OF GROUND WATER LEVELS UNTIL STRUCTURES ARE PLACED INTO OPERATION.

WATERTIGHTNESS OF REINFORCED CONCRETE WATER RETAINING STRUCTURES

1. HYDROSTATICALLY TEST REINFORCED CONCRETE STRUCTURES WHICH WILL CONTAIN WATER PER SPECIFICATIONS AND IN ACCORDANCE TO ACI 350.1-TIGHTNESS TESTING OF ENVIRONMENTAL ENGINEERING STRUCTURES. ALL REPAIRS AND RETESTING OF TANKS SHALL BE ACCOMPLISHED AT NO ADDITIONAL COST TO THE OWNER.

STRUCTURAL ABBREVIATIONS

&	AND	EXIST	EXISTING	PCS	PIECES
@	AT	EXP	EXPANSION	PEMB	PRE-ENGINEERED METAL BUILDING
#	NUMBER	FE	FIRE EXTINGUISHER	PERP	PERPENDICULAR
ADDTL	ADDITIONAL	FF	FAR FACE, FINISHED FLOOR	PL	PLATE
ALUM	ALUMINUM	FG	FINISHED GRADE	PLF	POUND PER LINEAR FOOT
AEWS	AUTOMATIC END WELDED STUD(S)	FRP	FIBER REINFORCED PLASTIC	PT	PRESSURE TREATED
ALT	ALTERNATE	FT	FOOT	PROJ	PROJECTION
APROX	APPROXIMATE(LY)	FTG	FOOTING	PSF	POUNDS PER SQUARE FOOT
BLD	BUILDING	FV	FIELD VERIFY	PSI	POUNDS PER SQUARE INCH
BM	BEAM	GA	GAGE	PVC	POLYVINYL CHLORIDE
BOT	BOTTOM	GALV	GALVANIZED	R	RADIUS
CJ	CONTROL JOINT	HK	HOOK	REINF	REINFORCING
CL	CENTER LINE	HORIZ	HORIZONTAL	REQD	REQUIRED
CLR	CLEAR	HSS	HOLLOW STRUCTURAL SECTION	RO	ROUGH OPENING
CMU	CONCRETE MASONRY UNIT	HP	HIGH POINT	SCHED	SCHEDULE(D)
COL	COLUMN	ID	INSIDE DIAMETER	SIM	SIMILAR
CONC	CONCRETE	JT	JOINT	SJ	SAWCUT JOINT
CONN	CONNECTION	LB(S)	POUND(S)	SMS	SHEET METAL SCREW
CONST JT	CONSTRUCTION JOINT	LONG	LONGITUDINAL	SPECS	SPECIFICATIONS
CONT	CONTINUOUS	LP	LOW POINT	SQ	SQUARE
DIA	DIAMETER	MANUF	MANUFACTURER	SS	STAINLESS STEEL
DIM	DIMENSION	MATL	MATERIAL	STD	STANDARD
DEG	DEGREE(S)	MAX	MAXIMUM	STL	STEEL
DO	DITTO	MECH	MECHANICAL	T/	TOP OF
DWG	DRAWING	MFR	MANUFACTURER	TB	TIE BEAM
DWL	DOWEL(S)	MIN	MINIMUM	T&B	TOP AND BOTTOM
(E)	EXISTING	MISC	MISCELLANEOUS	THK	THICK
EA	EACH	MO	MASONRY OPENING	THRU	THROUGH
EF	EACH FACE	MTL	METAL	TOC	TOP OF CONCRETE
EJ	EXPANSION JOINT	NO	NUMBER	TOS	TOP OF STEEL
EL	ELEVATION	NTS	NOT TO SCALE	TYP	TYPICAL
ELEC	ELECTRICAL	OC	ON CENTER	UNO	UNLESS NOTED OTHERWISE
EMBED	EMBEDMENT	OD	OUTSIDE DIAMETER	VERT	VERTICAL
EQ	EQUAL	OH	OPPOSITE HAND	WT	WEIGHT
EW	EACH WAY	OPNG	OPENING	WWF	WELDED WIRE FABRIC

LEGEND

STRUCTURAL LEGEND APPLIES TO "S" SHEETS ONLY

- EARTH FILL
- UNDISTURBED EARTH
- COMPACTED GRANULAR FILL
- GROUT OR SAND (AS NOTED)
- GRATING
- CONCRETE
- EXISTING CONCRETE
- DEMOLITION
- STEEL
- PRECAST CONCRETE

SYMBOLS

SYMBOLS APPLY TO "S" SHEETS ONLY

- 1 — COLUMN OR WALL LINE TAG
- T/SLAB EL.0.00 — ELEVATION TAG
- 00 / S00 — SECTION NO. / BUILDING SECTION INDICATOR / DWG. NO. OF SECTION VIEW
- A / S00 — DETAIL NO. / DETAIL INDICATOR / DWG. NO / INDICATES DETAIL SECTION CUT (WHERE SHOWN)

BID DOCUMENTS

IF THIS BAR DOES NOT MEASURE 1" THEN DRAWING HAS BEEN REDUCED SCALE ACCORDINGLY (0 — 1")

WEKIVA ENGINEERING
711 N ORANGE AVE, SUITE A
WINTER PARK, FL 32789
P: 321.972.4989 CA Lic. No: 31920
WEKIVA PROJECT #16-120

King ENGINEERING ASSOCIATES, INC.
4921 Memorial Highway
One Memorial Center, Suite 300
Tampa, Florida 33634
Phone 813 880-8881
Fax 813 880-8882
www.kingengineering.com
Engineering License #2610

RECORD DRAWINGS			
SURVEYED BY:	DRAWN BY:		
REVIEWED BY:			
PROJECT ENGINEER	DATE		
APPROVED BY:			
ENGINEER	DATE	REVISION	BY / DATE

CITY OF CLEARWATER, FLORIDA
ENGINEERING DEPARTMENT
100 S. MYRTLE AVE.
CLEARWATER, FL 33756

CALL 811 SUNSHINE STATE ONE CALL OF FLORIDA
www.callsunshine.com
(800) 432-4770
MIN. 48 HOURS BEFORE YOU EXCAVATE

NORTHEAST WRF GRIT REMOVAL, SALSNES FILTER AND EQUALIZATION SYSTEM IMPROVEMENTS

GENERAL NOTES, ABBREVIATIONS, AND SYMBOLS

DWG NAME: –	FIELD BOOK: –	SURVEYED BY: –	SCALE: VERT. AS SHOWN
CONTRACT NO.: 15-0045-UT	DATE DRAWN: FEBRUARY 2019	DRAWN BY: JVS	HORIZ. AS SHOWN
JOB NO.: 2110-210-002	DESIGNED BY: JVS	CHECKED BY: DSM	SHEET NO.: ## OF 117
APPROVED FOR CONSTRUCTION			

© COPYRIGHT 2019 KING ENGINEERING ASSOCIATES, INC. DRAWINGS AND CONCEPTS MAY NOT BE USED OR REPRODUCED WITHOUT WRITTEN PERMISSION. CONSULTANT HAS NO RESPONSIBILITY FOR ANY REPRODUCTION OR USE OF THIS DOCUMENT UNLESS SPECIFICALLY GRANTED. CONSULT IN WRITING WHEN SPECIFICALLY TO ENGINEERING ALTERNATE TO REPRODUCE THIS DOCUMENT IN COMPLIANCE WITH F.S. CHAPTER 119.

O:\ENV_ENG\2110\210\002\production\Drawings\S1.00 2019-03-25 .dwg, March 18, 2020 2:35 PM, King Engineering Associate Inc.

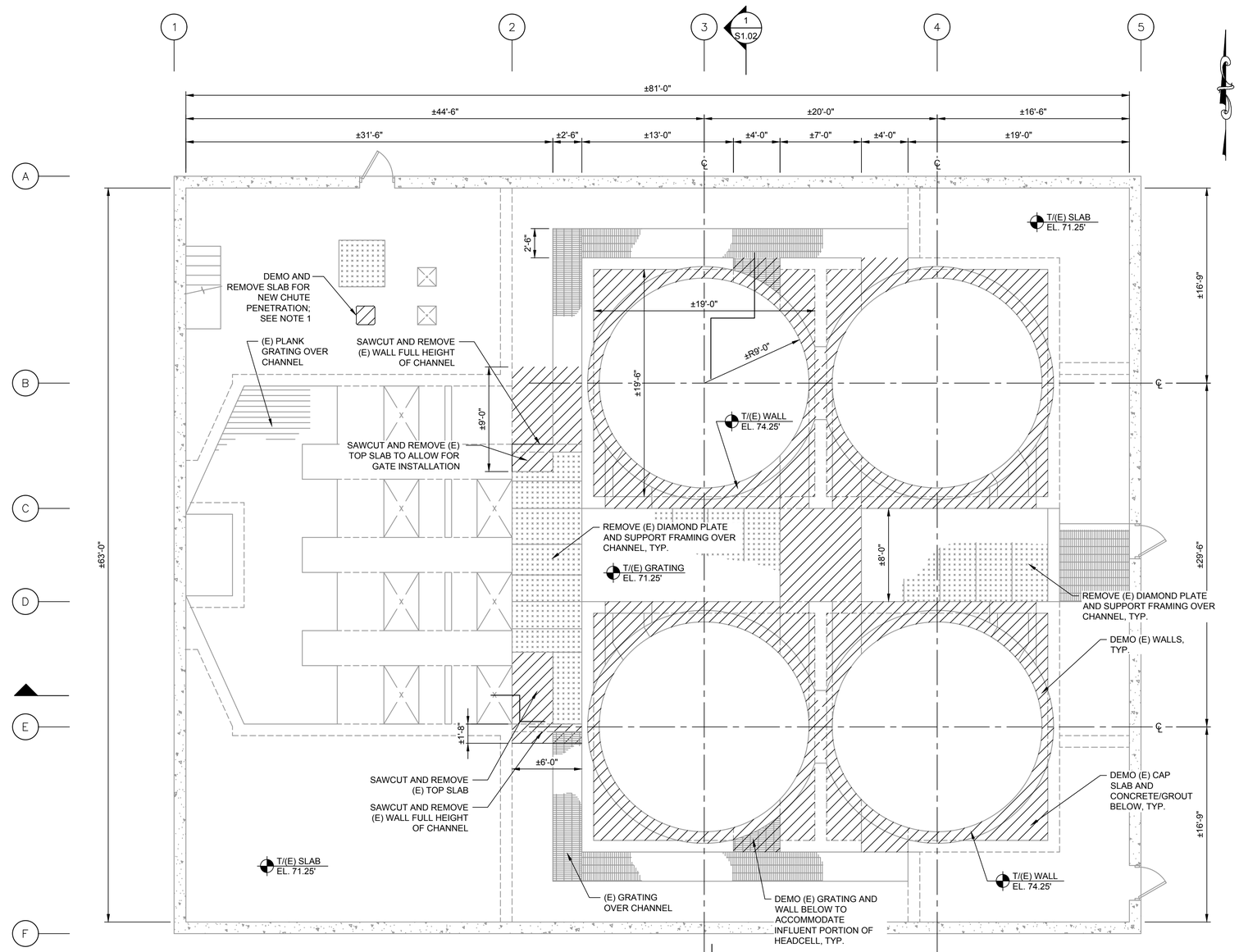

NOTES:

1. PROVIDE MINIMUM 4" DIAMETER CONCRETE CORES AT CORNERS OF PROPOSED OPENING TO PREVENT OVERRUNNING OF SAWCUTS AT CORNERS. CONTRACTOR SHALL COORDINATE SIZE OF OPENING WITH CHUTE MANUFACTURER.
2. ALL EXISTING DIMENSIONS ARE APPROXIMATE AND SHALL BE FIELD VERIFIED BY THE CONTRACTOR AS NEEDED.
3. SEE "M" SHEETS FOR ADDITIONAL DEMOLITION.

DEMOLITION
PLAN
3/16"=1'-0"

BID DOCUMENTS

IF THIS BAR DOES NOT MEASURE 1" THEN DRAWING HAS BEEN REDUCED SCALE ACCORDINGLY

WEKIVA ENGINEERING
711 N ORANGE AVE, SUITE A
WINTER PARK, FL 32789
P: 321.972.4989 CA Lic. No: 31920
WEKIVA PROJECT #16-120

King ENGINEERING ASSOCIATES, INC.
4921 Memorial Highway
One Memorial Center, Suite 300
Tampa, Florida 33634
Phone 813 880-8881
Fax 813 880-8882
www.kingengineering.com
Engineering License #2610

RECORD DRAWINGS
SURVEYED BY: DRAWN BY:
REVIEWED BY: PROJECT ENGINEER DATE
APPROVED BY: ENGINEER DATE

REVISION	BY	DATE

CITY OF CLEARWATER, FLORIDA
ENGINEERING DEPARTMENT
100 S. MYRTLE AVE.
CLEARWATER, FL 33756

CALL 811 SUNSHINE STATE ONE CALL OF FLORIDA www.callsunshine.com (800) 432-4770 BEFORE YOU EXCAVATE

NORTHEAST WRF GRIT REMOVAL, SALSNES FILTER AND EQUALIZATION SYSTEM IMPROVEMENTS

INFLUENT STRUCTURE DEMOLITION PLAN

DWG NAME: —	FIELD BOOK: —	SURVEYED BY: —	SCALE: VERT. AS SHOWN
CONTRACT NO.: 15-0045-UT	DATE DRAWN: FEBRUARY 2019	DRAWN BY: JVS	HORIZ. AS SHOWN
JOB NO.: 2110-210-002	DESIGNED BY: JVS	CHECKED BY: DSM	SHEET NO.: ## OF 117

APPROVED FOR CONSTRUCTION

© COPYRIGHT 2019 KING ENGINEERING ASSOCIATES, INC. DRAWINGS AND CONCEPTS MAY NOT BE USED OR REPRODUCED WITHOUT WRITTEN PERMISSION. CONSULT WITH KING ENGINEERING ASSOCIATES, INC. PRIOR TO REPRODUCING THIS DOCUMENT IN COMPLIANCE WITH F.S. CHAPTER 119.

O:\ENV_ENG\2110\210\002\production\Drawings\S1.01-1.02 2019-03-25 .dwg, March 18, 2020 2:35 PM, King Engineering Associate Inc.

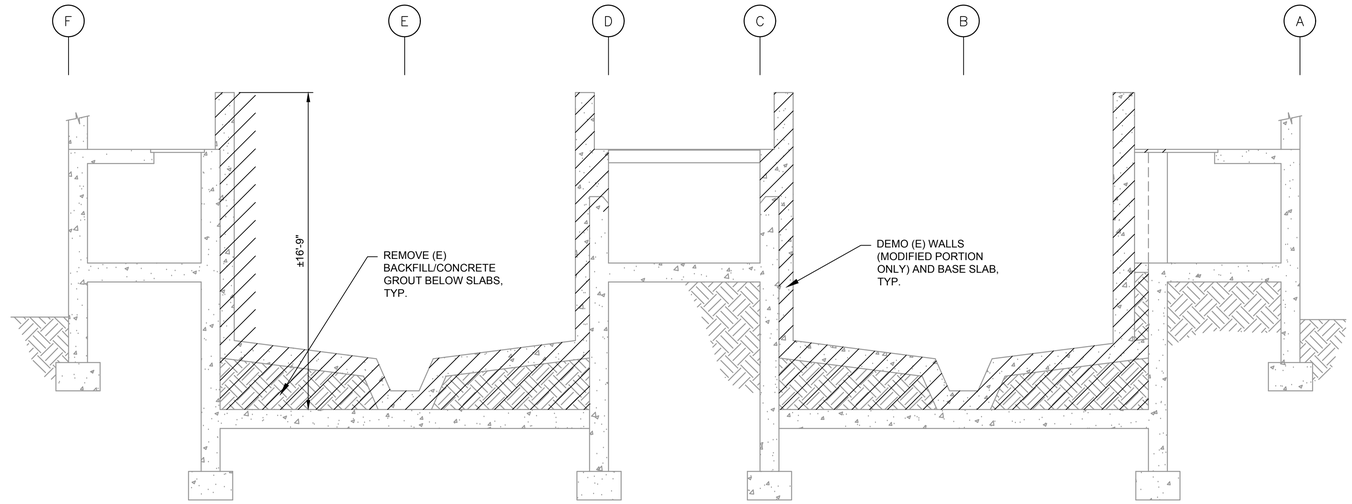

SECTION 1 / S1.01
1/4"=1'-0"

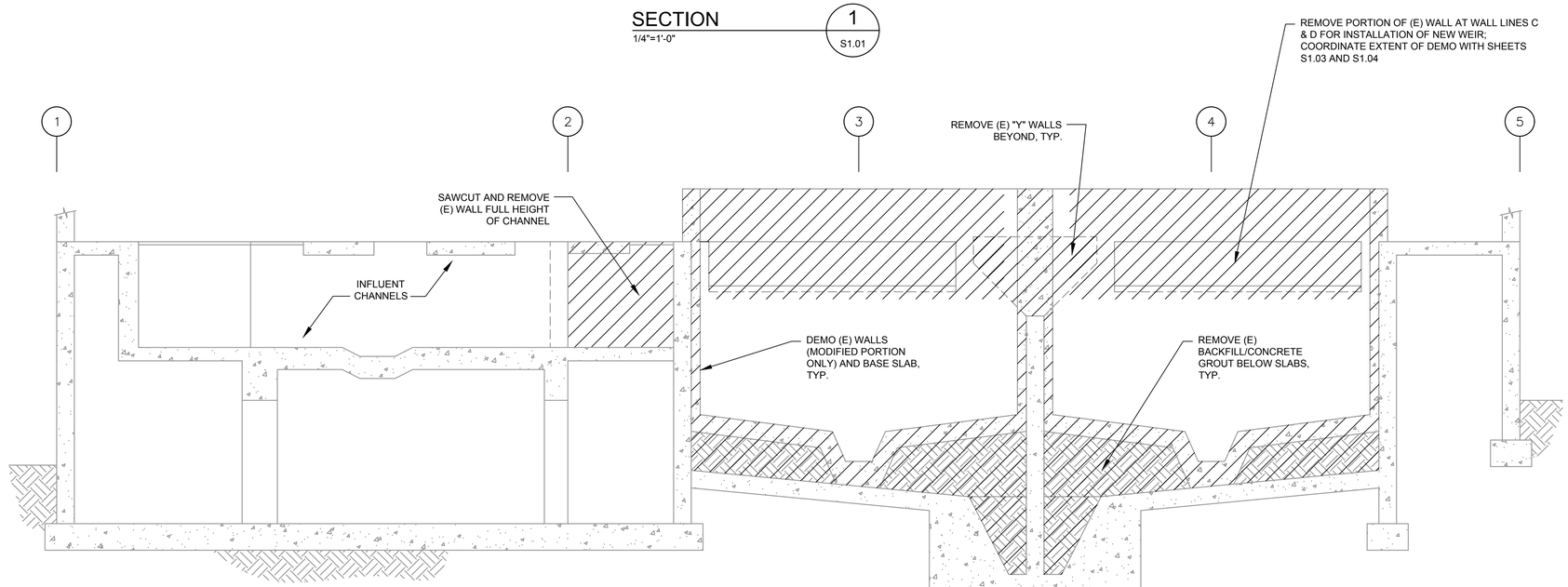

NOTES:
1. ALL EXISTING DIMENSIONS ARE APPROXIMATE AND SHALL BE FIELD VERIFIED BY THE CONTRACTOR AS NEEDED.
2. SEE "M" SHEETS FOR ADDITIONAL DEMOLITION.

SECTION 2 / S1.01
1/4"=1'-0"

BID DOCUMENTS

IF THIS BAR DOES NOT MEASURE 1" THEN DRAWING HAS BEEN REDUCED SCALE ACCORDINGLY
0 1"

WEKIVA ENGINEERING
711 N ORANGE AVE, SUITE A
WINTER PARK, FL 32789
P: 321.972.4989 CA Lic. No: 31920
WEKIVA PROJECT #16-120

King ENGINEERING ASSOCIATES, INC.
4921 Memorial Highway
One Memorial Center, Suite 300
Tampa, Florida 33634
Phone 813 880-8881
Fax 813 880-8882
www.kingengineering.com
Engineering License #2610

COPYRIGHT 2019 KING ENGINEERING ASSOCIATES, INC. DRAWINGS AND CONCEPTS MAY NOT BE USED OR REPRODUCED WITHOUT WRITTEN PERMISSION. CONSULT WITH KING ENGINEERING ASSOCIATES, INC. REGARDING REQUESTS TO REPRODUCE THIS DOCUMENT IN COMPLIANCE WITH F.S. CHAPTER 119.

RECORD DRAWINGS
SURVEYED BY: DRAWN BY:
REVIEWED BY: PROJECT ENGINEER DATE
APPROVED BY: ENGINEER DATE

REVISION	BY	DATE

CITY OF CLEARWATER, FLORIDA
ENGINEERING DEPARTMENT
100 S. MYRTLE AVE.
CLEARWATER, FL 33756

CALL 811 SUNSHINE STATE ONE CALL OF FLORIDA
www.callsunshine.com
(800) 432-4770
MIN. 48 HOURS BEFORE YOU EXCAVATE

NORTHEAST WRF GRIT REMOVAL, SALSNES FILTER AND EQUALIZATION SYSTEM IMPROVEMENTS

INFLUENT STRUCTURE DEMOLITION SECTIONS

DWG NAME: –	FIELD BOOK: –	SURVEYED BY: –	SCALE: VERT. AS SHOWN
CONTRACT NO.: 15-0045-UT	DATE DRAWN: FEBRUARY 2019	DRAWN BY: JVS	HORIZ. AS SHOWN
JOB NO.: 2110-210-002	DESIGNED BY: JVS	CHECKED BY: DSM	SHEET NO.: ## OF 117

APPROVED FOR CONSTRUCTION

O:\ENV_ENG\2110\210\002\production\Drawings\S1.01-1.02 2019-03-25.dwg, March 18, 2020 2:36 PM, King Engineering Associate Inc.

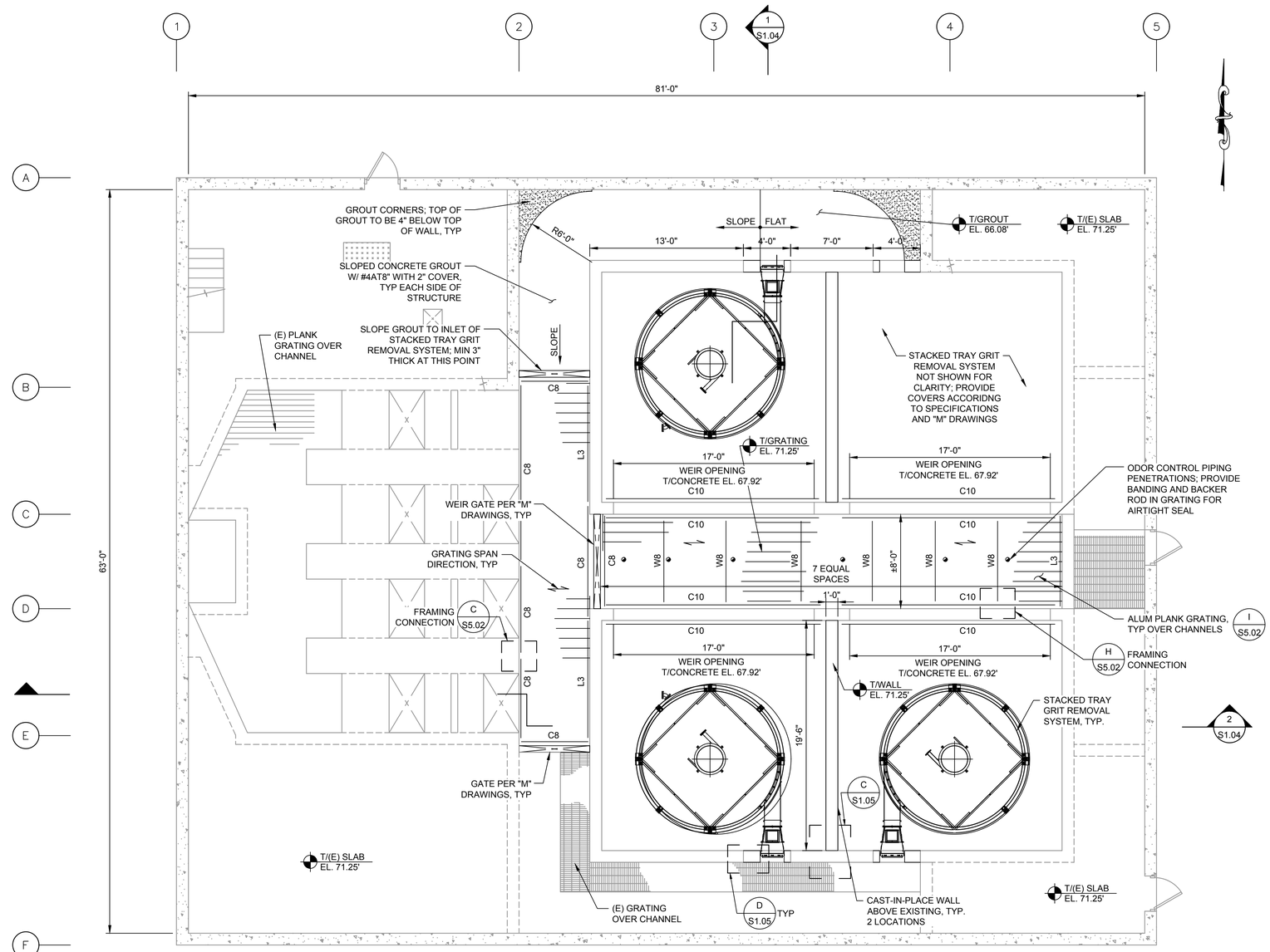

PLAN

3/16"=1'-0"

SHAPE LEGEND: TYPE 316 STAINLESS STEEL

- C8: C8x18.75
- C10: C10x20
- W8: W8X18
- W10: W10X26
- L3: L3X3X1/4

NOTES:

1. SLOPED GROUT FLOOR OF CHANNEL IS TYPICAL AT EACH SIDE OF STRUCTURE; ONLY NORTH SIDE SHOWN FOR CLARITY.

BID DOCUMENTS

IF THIS BAR DOES NOT MEASURE 1" THEN DRAWING HAS BEEN REDUCED SCALE ACCORDINGLY 0 1"

WEKIVA ENGINEERING
711 N ORANGE AVE, SUITE A
WINTER PARK, FL 32789
P: 321.972.4989 CA Lic. No: 31920
WEKIVA PROJECT #16-120

King ENGINEERING ASSOCIATES, INC.
4921 Memorial Highway
One Memorial Center, Suite 300
Tampa, Florida 33634
Phone 813 880-8881
Fax 813 880-8882
www.kingengineering.com
Engineering License #2610

RECORD DRAWINGS

SURVEYED BY: DRAWN BY:
REVIEWED BY: PROJECT ENGINEER DATE
APPROVED BY: ENGINEER DATE

REVISION	BY	DATE

CITY OF CLEARWATER, FLORIDA
ENGINEERING DEPARTMENT
100 S. MYRTLE AVE.
CLEARWATER, FL 33756

CALL 811 SUNSHINE STATE ONE CALL OF FLORIDA www.callsunshine.com (800) 432-4770 NOT 48 HOURS BEFORE YOU EXCAVATE

NORTHEAST WRF GRIT REMOVAL, SALSNES FILTER AND EQUALIZATION SYSTEM IMPROVEMENTS

INFLUENT STRUCTURE PLAN

DWG NAME: –	FIELD BOOK: –	SURVEYED BY: –	SCALE: VERT. AS SHOWN
CONTRACT NO.: 15-0045-UT	DATE DRAWN: FEBRUARY 2019	DRAWN BY: JVS	HORIZ. AS SHOWN
JOB NO.: 2110-210-002	DESIGNED BY: JVS	CHECKED BY: DSM	SHEET NO.: ## OF 117
APPROVED FOR CONSTRUCTION			

© COPYRIGHT 2019 KING ENGINEERING ASSOCIATES, INC. DRAWINGS AND CONCEPTS MAY NOT BE USED OR REPRODUCED WITHOUT WRITTEN PERMISSION. CONSULT WITH KING ENGINEERING ASSOCIATES, INC. PRIOR TO REPRODUCING THIS DOCUMENT IN COMPLIANCE WITH F.S. CHAPTER 119.

O:\ENV_ENG\2110\210\002\production\Drawings\S1.03-1.05 2019-03-25.dwg, March 18, 2020 2:36 PM, King Engineering Associate Inc.

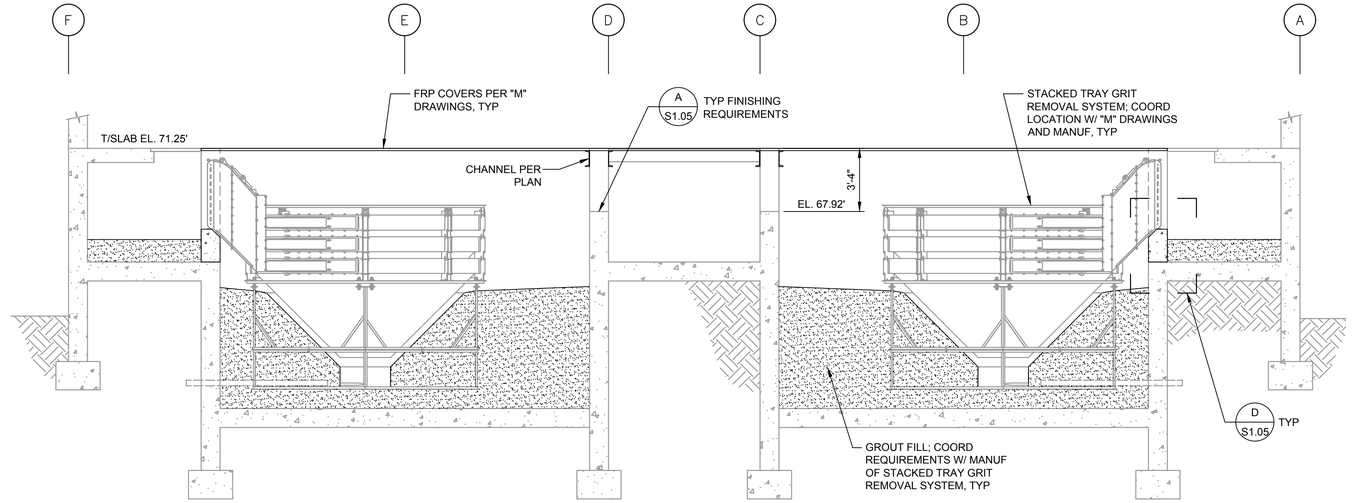

SECTION 1 / S1.03
1/4"=1'-0"

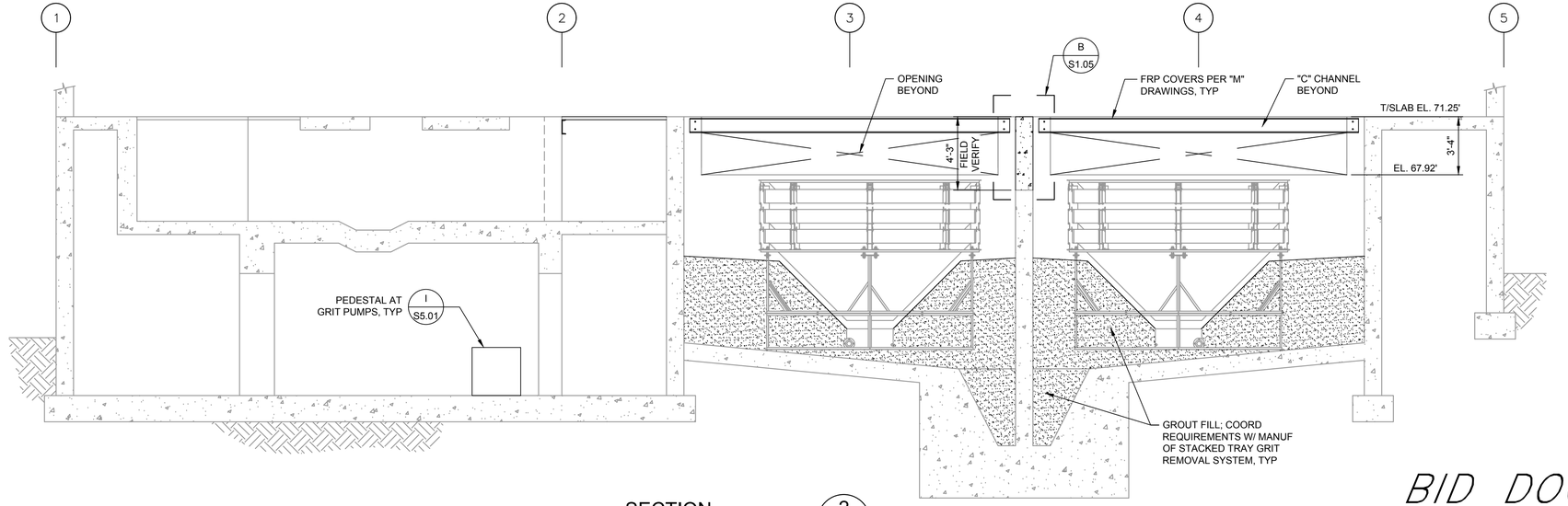

SECTION 2 / S1.03
1/4"=1'-0"

BID DOCUMENTS

IF THIS BAR DOES NOT MEASURE 1" THEN DRAWING HAS BEEN REDUCED SCALE ACCORDINGLY

WEKIVA ENGINEERING
711 N ORANGE AVE, SUITE A
WINTER PARK, FL 32789
P: 321.972.4989 CA Lic. No: 31920
WEKIVA PROJECT #16-120

King ENGINEERING ASSOCIATES, INC.
4921 Memorial Highway
One Memorial Center, Suite 300
Tampa, Florida 33634
Phone 813 880-8881
Fax 813 880-8882
www.kingengineering.com
Engineering License #2610

RECORD DRAWINGS

SURVEYED BY:	DRAWN BY:		
REVIEWED BY:	PROJECT ENGINEER	DATE	
APPROVED BY:	ENGINEER	DATE	

REVISION	BY	DATE

CITY OF CLEARWATER, FLORIDA
ENGINEERING DEPARTMENT
100 S. MYRTLE AVE.
CLEARWATER, FL 33756

CALL 811 SUNSHINE STATE ONE CALL OF FLORIDA www.callsunshine.com (800) 432-4770 (MIN. 48 HOURS BEFORE YOU EXCAVATE)

NORTHEAST WRF GRIT REMOVAL, SALSNES FILTER AND EQUALIZATION SYSTEM IMPROVEMENTS

INFLUENT STRUCTURE SECTIONS

DWG NAME: –	FIELD BOOK: –	SURVEYED BY: –	SCALE: VERT. AS SHOWN
CONTRACT NO.: 15-0045-UT	DATE DRAWN: FEBRUARY 2019	DRAWN BY: JVS	HORIZ. AS SHOWN
JOB NO.: 2110-210-002	DESIGNED BY: JVS	CHECKED BY: DSM	SHEET NO.: ## OF 117
APPROVED FOR CONSTRUCTION			

© COPYRIGHT 2019 KING ENGINEERING ASSOCIATES, INC. DRAWINGS AND CONCEPTS MAY NOT BE USED OR REPRODUCED WITHOUT WRITTEN PERMISSION. CONSULT WITH KING ENGINEERING ASSOCIATES, INC. IF YOU HAVE QUESTIONS. ALTERATIONS TO THIS DOCUMENT IN CONFLICT WITH F.S. CHAPTER 119.

O:\ENV_ENG\2110\210\002\production\Drawings\S1.03-1.05 2019-03-25.dwg, March 18, 2020 2:36 PM, King Engineering Associate Inc.

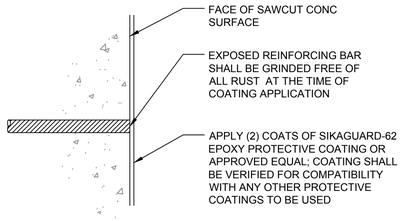

NOTES:

1. DETAIL IS APPLICABLE TO VERTICAL AND HORIZONTAL SURFACES.
2. APPLY PROTECTIVE COATING IN ACCORDANCE W/ MANUFACTURER'S WRITTEN INSTRUCTIONS AND RECOMMENDATIONS.

DETAIL A S1.01
1"=1'-0"

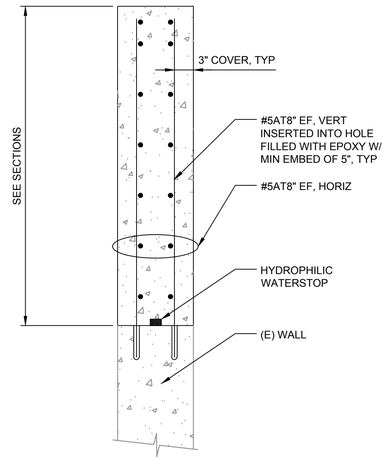

DETAIL B S1.04
1"=1'-0"

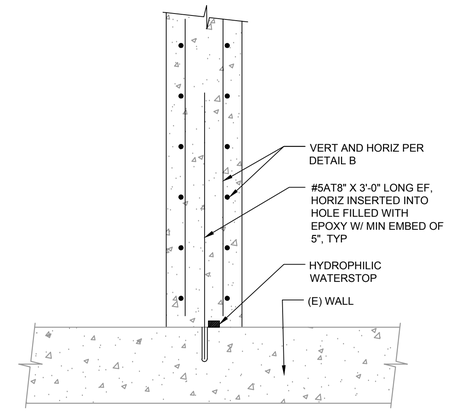

DETAIL C S1.03
1"=1'-0"

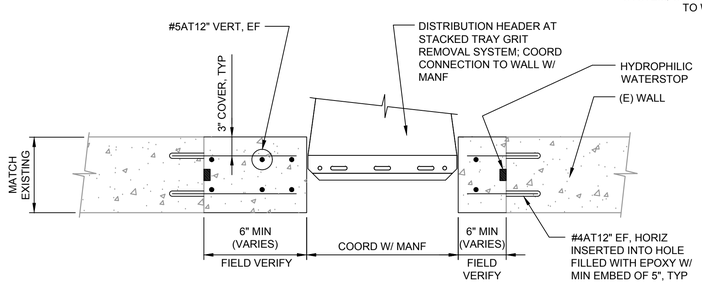

PLAN

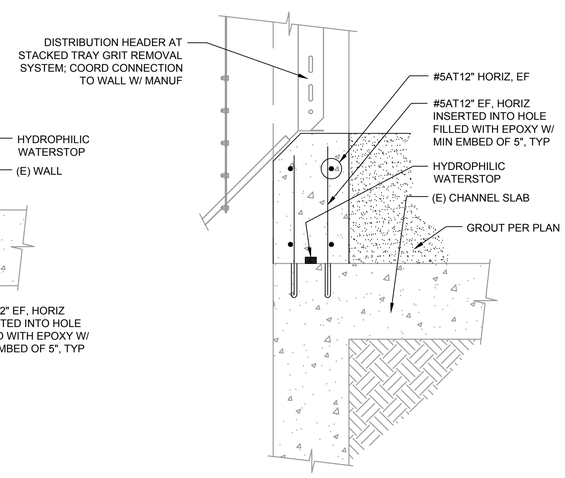

SECTION

DETAIL D S1.04
1"=1'-0"

BID DOCUMENTS

IF THIS BAR DOES NOT MEASURE 1" THEN DRAWING HAS BEEN REDUCED SCALE ACCORDINGLY 0 1"

WEKIVA ENGINEERING
711 N ORANGE AVE, SUITE A
WINTER PARK, FL 32789
P: 321.972.4989 CA Lic. No: 31920
WEKIVA PROJECT #16-120

King ENGINEERING ASSOCIATES, INC.
4921 Memorial Highway
One Memorial Center, Suite 300
Tampa, Florida 33634
Phone 813 880-8881
Fax 813 880-8882
www.kingengineering.com
Engineering License #2610

RECORD DRAWINGS
SURVEYED BY: DRAWN BY:
REVIEWED BY: PROJECT ENGINEER DATE
APPROVED BY: ENGINEER DATE

REVISION	BY	DATE

CITY OF CLEARWATER, FLORIDA
ENGINEERING DEPARTMENT
100 S. MYRTLE AVE.
CLEARWATER, FL 33756

CALL 811 SUNSHINE STATE ONE CALL OF FLORIDA www.callsunshine.com (800) 432-4770 MIN. 48 HOURS BEFORE YOU EXCAVATE

NORTHEAST WRF GRIT REMOVAL, SALSNES FILTER AND EQUALIZATION SYSTEM IMPROVEMENTS

INFLUENT STRUCTURE DETAILS

DWG NAME: –	FIELD BOOK: –	SURVEYED BY: –	SCALE: VERT. AS SHOWN
CONTRACT NO.: 15-0045-UT	DATE DRAWN: FEBRUARY 2019	DRAWN BY: JVS	HORIZ. AS SHOWN
JOB NO.: 2110-210-002	DESIGNED BY: JVS	CHECKED BY: DSM	SHEET NO.: ## OF 117

APPROVED FOR CONSTRUCTION

© COPYRIGHT 2019 KING ENGINEERING ASSOCIATES, INC. DRAWINGS AND CONCEPTS MAY NOT BE USED OR REPRODUCED WITHOUT WRITTEN PERMISSION. CONSULTANT HEREBY GRANTS PERMISSION TO GOVERNMENTAL AGENCIES TO REPRODUCE THIS DOCUMENT IN COMPLIANCE WITH F.S. CHAPTER 119.

O:\ENV_ENG\2110\210\002\production\Drawings\S1.03-1.05 2019-03-25.dwg, March 18, 2020 2:36 PM, King Engineering Associate Inc.

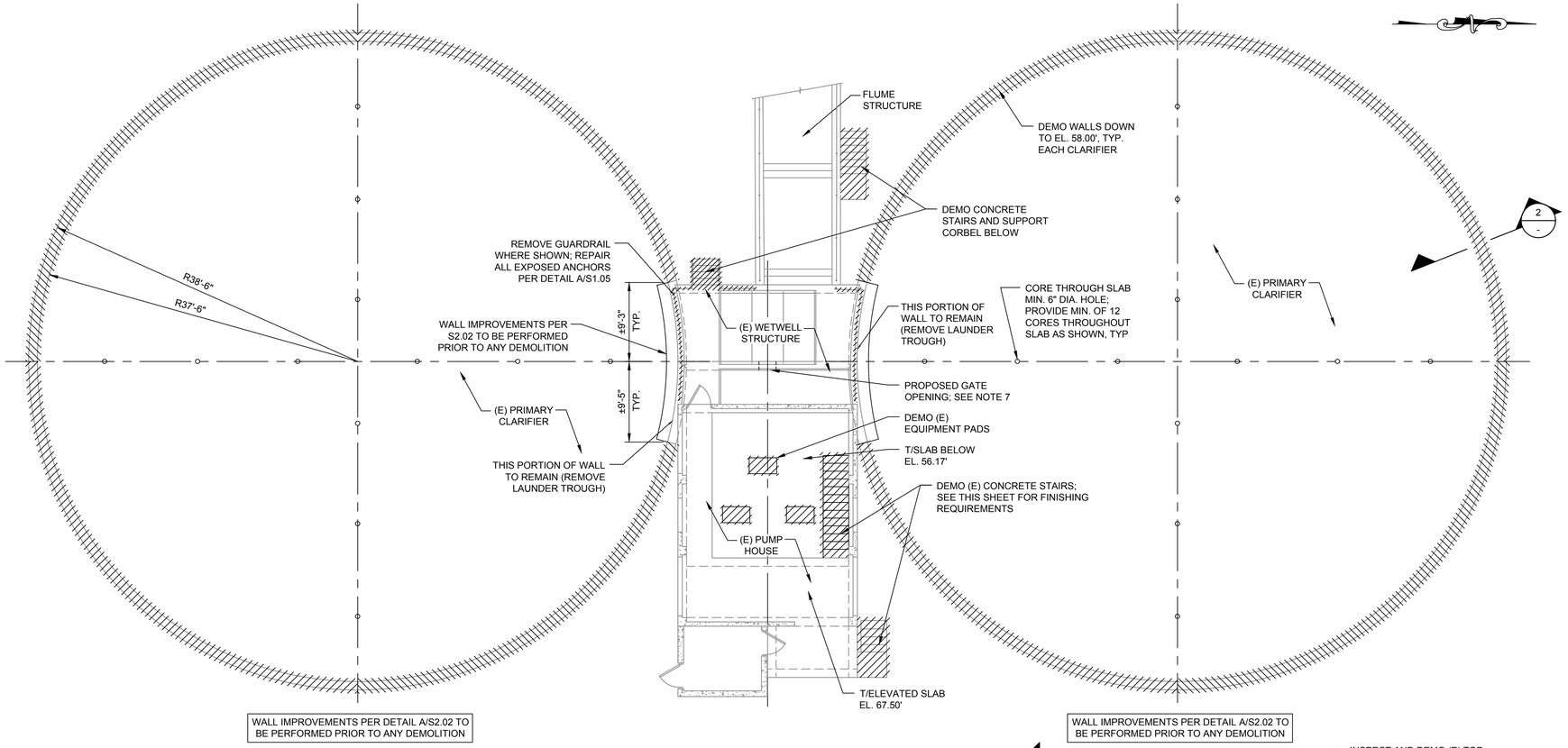

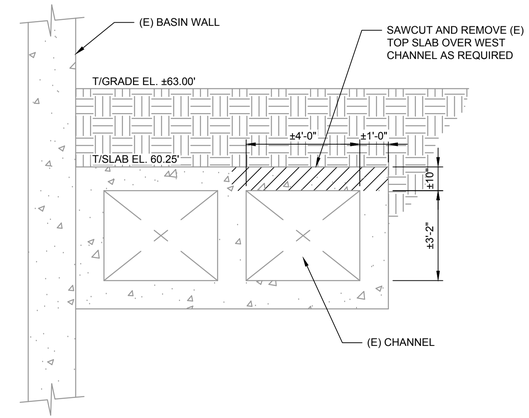

EXISTING CHANNEL DEMOLITION
SECTION 1 / -
3/8"=1'-0"

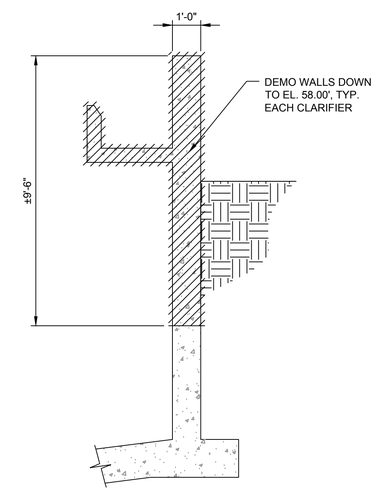

PRIMARY CLARIFIER DEMOLITION
SECTION 2 / -
3/8"=1'-0"

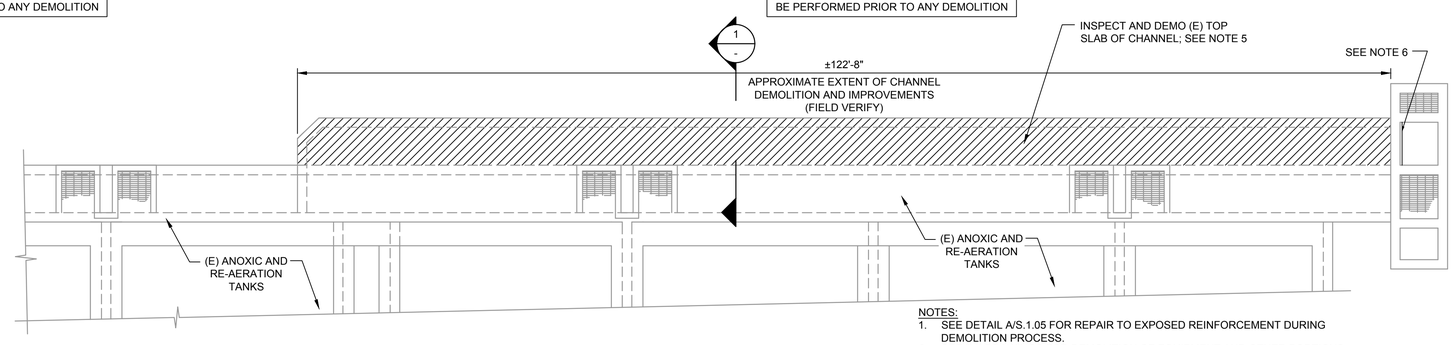

DEMOLITION
PLAN
1/8"=1'-0"

NOTES:
1. SEE DETAIL A/S.1.05 FOR REPAIR TO EXPOSED REINFORCEMENT DURING DEMOLITION PROCESS.
2. SEE "M" DRAWINGS FOR DEMOLITION OF EQUIPMENT AND OTHER PORTIONS OF STRUCTURES NOT SHOWN.
3. CONTRACTOR TO SUBMIT DEMOLITION PLAN INDICATING PROCEDURE FOR STRUCTURE AND EQUIPMENT REMOVAL TO ENGINEER DURING SHOP DRAWING REVIEW PHASE.
4. SEE SHEET S2.01 FOR IMPROVEMENTS TO EXISTING CHANNEL.
5. AFTER REMOVAL OF THE TOP SLAB AT THE CHANNEL, ENGINEER OF RECORD SHALL INSPECT THE CHANNEL PRIOR TO ANY FURTHER MODIFICATIONS. ONCE THE INSPECTION IS COMPLETE THE CONTRACTOR WILL RECEIVE NOTIFICATION FROM THE ENGINEER TO PROCEED WITH IMPROVEMENTS.
6. CONTRACTOR TO PROVIDE NEW ALUMINUM STOP GATE TO FIT EXISTING GUIDES ON WALL. NEW GUIDES SHALL BE PROVIDED W/ SS ANCHORAGE WHERE EXISTING DO NOT ALLOW PROPER SEALING OF STOP GATE.
7. PROVIDE NEW OPENING IN CONCRETE FOR 24" WIDE GATE; SEE "M" DRAWINGS AND SHEET S2.01. CONTRACTOR SHALL PROVIDE MINIMUM OF 4" DIAMETER CONCRETE CORES AT EACH CORNER OF THE PROPOSED OPENING TO PREVENT OVERRUNNING OF SAWCUTS.

IF THIS BAR DOES NOT MEASURE 1" THEN DRAWING HAS BEEN REDUCED SCALE ACCORDINGLY
0 1"

BID DOCUMENTS

WEKIVA ENGINEERING
711 N ORANGE AVE, SUITE A
WINTER PARK, FL 32789
P: 321.972.4989 CA Lic. No: 31920
WEKIVA PROJECT #16-120

King ENGINEERING ASSOCIATES, INC.
4921 Memorial Highway
One Memorial Center, Suite 300
Tampa, Florida 33634
Phone 813 880-8881
Fax 813 880-8882
www.kingengineering.com
Engineering License #2610

RECORD DRAWINGS				
SURVEYED BY:	DRAWN BY:			
REVIEWED BY:				
PROJECT ENGINEER	DATE			
APPROVED BY:				
ENGINEER	DATE	REVISION	BY	DATE

CITY OF CLEARWATER, FLORIDA
ENGINEERING DEPARTMENT
100 S. MYRTLE AVE.
CLEARWATER, FL 33756

CALL 811
SUNSHINE STATE ONE CALL OF FLORIDA
www.callsunshine.com
(800) 432-4770
MIN. 48 HOURS BEFORE YOU EXCAVATE

NORTHEAST WRF GRIT REMOVAL, SALSNES FILTER AND EQUALIZATION SYSTEM IMPROVEMENTS
PRIMARY CLARIFIER & PUMP BUILDING DEMOLITION PLAN AND SECTIONS

DWG NAME: –	FIELD BOOK: –	SURVEYED BY: –	SCALE: VERT. AS SHOWN
CONTRACT NO.: 15-0045-UT	DATE DRAWN: FEBRUARY 2019	DRAWN BY: JVS	HORIZ. AS SHOWN
JOB NO.: 2110-210-002	DESIGNED BY: JVS	CHECKED BY: DSM	SHEET NO.: ## OF 117
APPROVED FOR CONSTRUCTION			

© COPYRIGHT 2019 KING ENGINEERING ASSOCIATES, INC. DRAWINGS AND CONCEPTS MAY NOT BE USED OR REPRODUCED WITHOUT WRITTEN PERMISSION CONSULT WITH KING ENGINEERING ASSOCIATES, INC. BEFORE USE OF THESE DOCUMENTS. REPRODUCE THIS DOCUMENT IN COMPLIANCE WITH 17 - CHAPTER 119.

O:\ENV_ENG\2110\210\002\production\Drawings\S2.00 2019-03-25.dwg, March 18, 2020 2:36 PM, King Engineering Associate Inc.

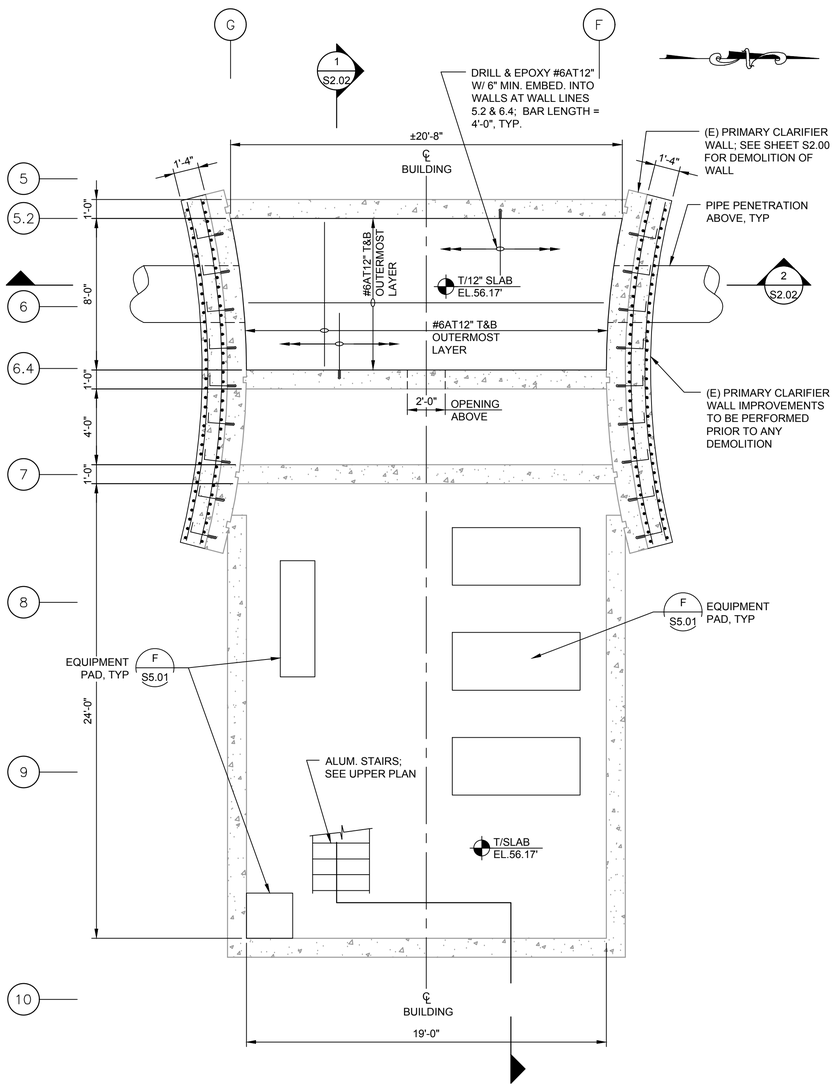

PLAN AT EL. 56.17'

PLAN

1/4"=1'-0"

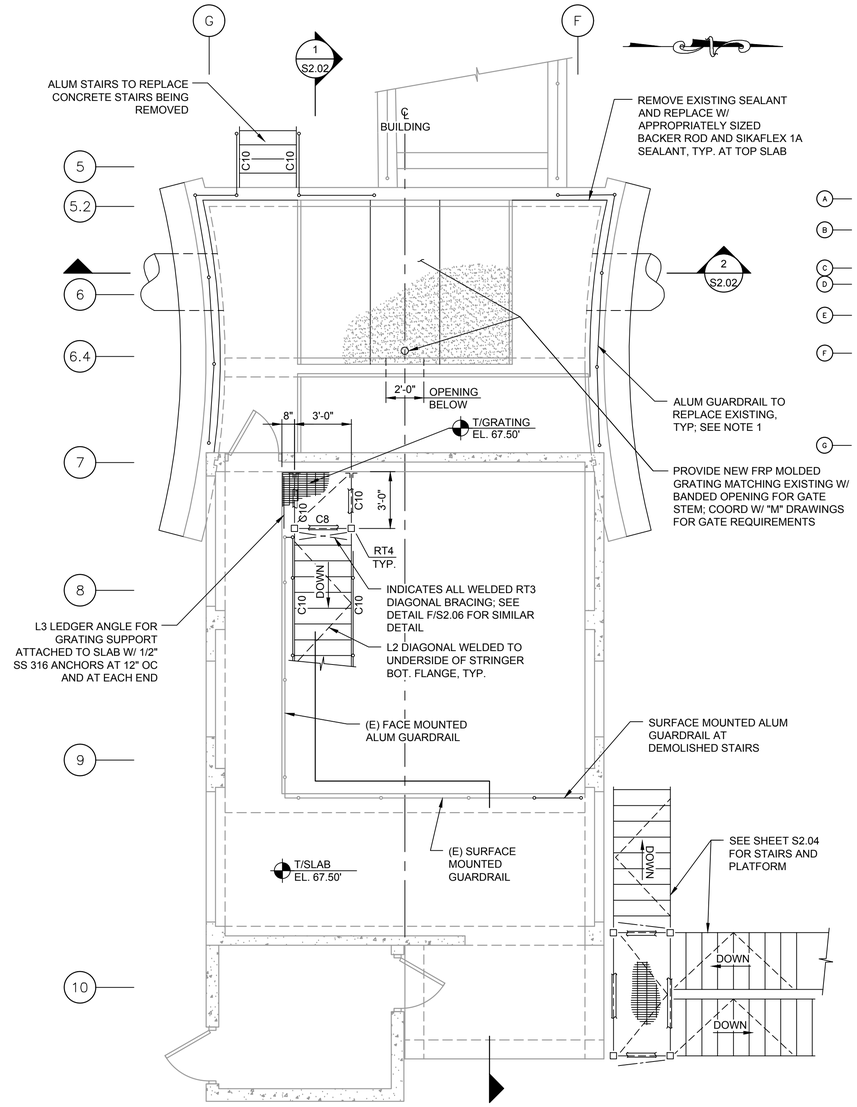

PLAN AT EL. 69.00'

PLAN

1/4"=1'-0"

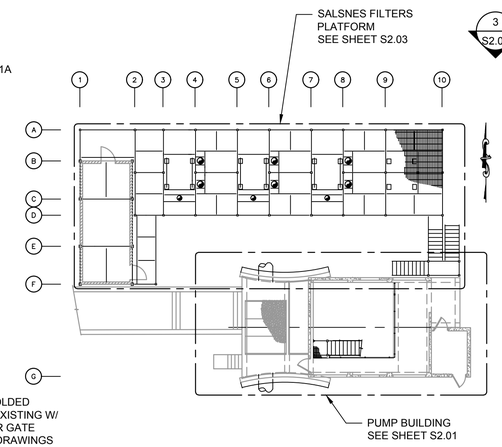

KEY PLAN

N.T.S.

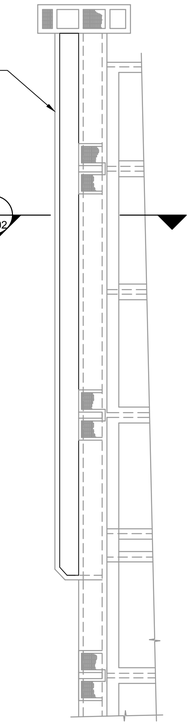

SHAPE LEGEND: ALUMINUM

- C10: C10x15.3
- C8: C8x11.5
- RT4: 4x4X1/4
- RT3: 3x3x1/4
- L3: L3X3X1/4

NOTES:

1. ALL NEW GUARDRAIL SHALL BE PLACED WHERE A MAXIMUM GAP OF 4" IS PROVIDED BETWEEN EXISTING AND NEW POSTS. ALL DIMENSIONS SHALL BE FIELD VERIFIED PRIOR TO ANY FABRICATION.

BID DOCUMENTS

IF THIS BAR DOES NOT MEASURE 1" THEN DRAWING HAS BEEN REDUCED SCALE ACCORDINGLY

WEKIVA ENGINEERING
711 N ORANGE AVE, SUITE A
WINTER PARK, FL 32789
P: 321.972.4989 CA Lic. No: 31920
WEKIVA PROJECT #16-120

King ENGINEERING ASSOCIATES, INC.
4921 Memorial Highway
One Memorial Center, Suite 300
Tampa, Florida 33634
Phone 813 880-8881
Fax 813 880-8882
www.kingengineering.com
Engineering License #2610

RECORD DRAWINGS			
SURVEYED BY:	DRAWN BY:		
REVIEWED BY:			
PROJECT ENGINEER	DATE		
APPROVED BY:			
ENGINEER	DATE	REVISION	BY / DATE

CITY OF CLEARWATER, FLORIDA
ENGINEERING DEPARTMENT
100 S. MYRTLE AVE.
CLEARWATER, FL 33756

CALL 811 SUNSHINE STATE ONE CALL OF FLORIDA www.callsunshine.com (800) 432-4770

NORTHEAST WRF GRIT REMOVAL, SALSNES FILTER AND EQUALIZATION SYSTEM IMPROVEMENTS

PUMP BUILDING PLANS

DWG NAME: –	FIELD BOOK: –	SURVEYED BY: –	SCALE: VERT. AS SHOWN
CONTRACT NO.: 15-0045-UT	DATE DRAWN: FEBRUARY 2019	DRAWN BY: JVS	HORIZ. AS SHOWN
JOB NO.: 2110-210-002	DESIGNED BY: JVS	CHECKED BY: DSM	SHEET NO.: ## OF 117
APPROVED FOR CONSTRUCTION			

© COPYRIGHT 2019 KING ENGINEERING ASSOCIATES, INC. DRAWINGS AND CONCEPTS MAY NOT BE USED OR REPRODUCED WITHOUT WRITTEN PERMISSION. CONSULTANT HEREBY GRANTS PERMISSION TO GOVERNMENTAL AGENCIES TO REPRODUCE THIS DOCUMENT IN COMPLIANCE WITH F.S. CHAPTER 119.

O:\ENV_ENG\2110\210\002\production\Drawings\S2.01-2.02 2019-03-25.dwg, March 18, 2020 2:37 PM, King Engineering Associate Inc.

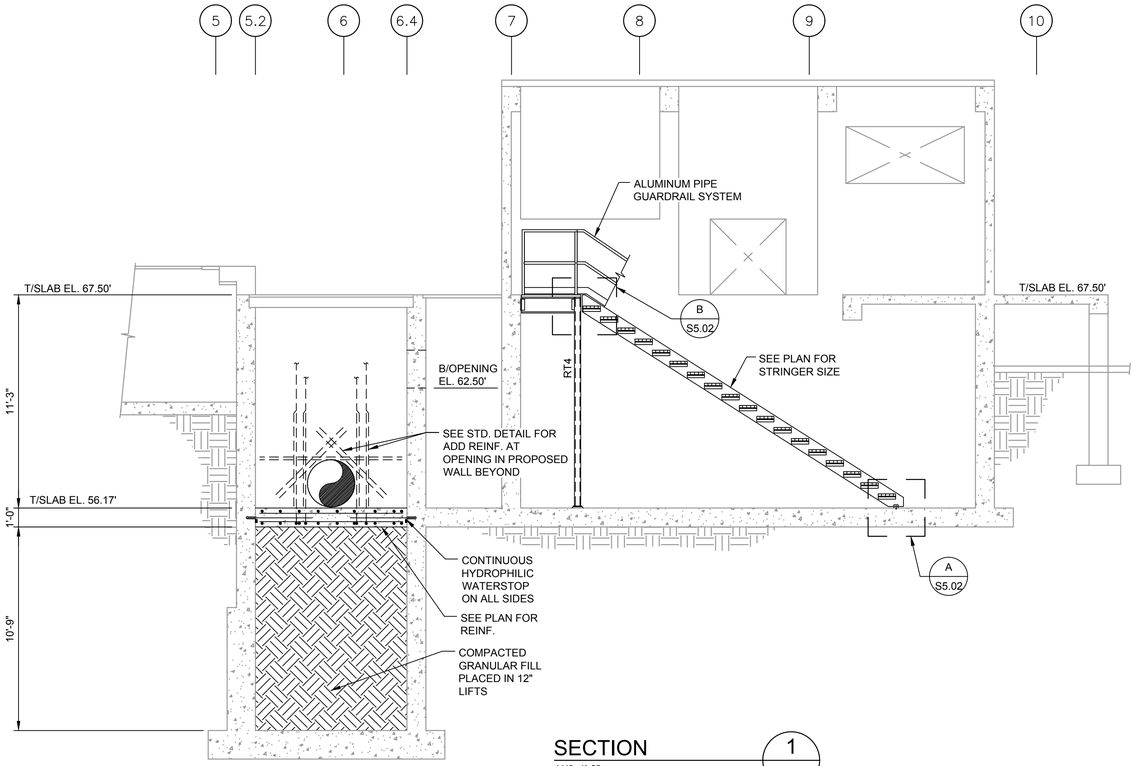

SECTION 1 / S2.01
1/4"=1'-0"

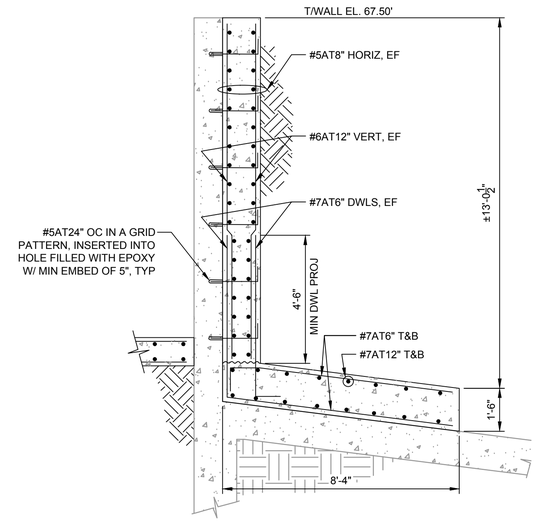

ENLARGED WALL & SLAB SECTION

DETAIL A / -
3/8"=1'-0"

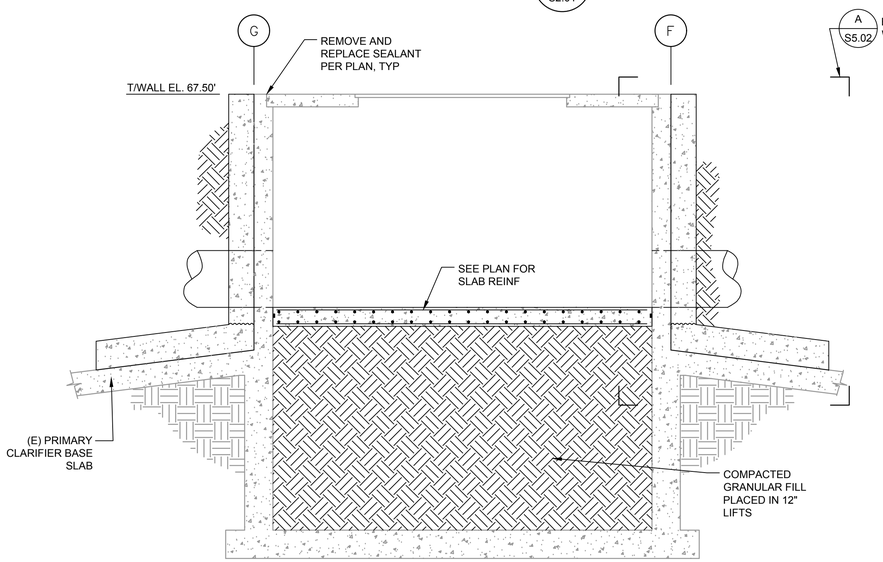

SECTION 2 / S2.01
1/4"=1'-0"

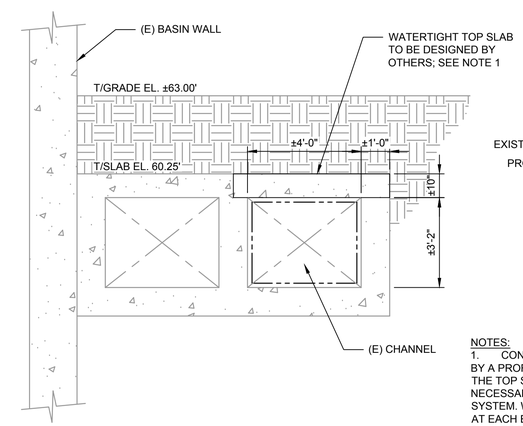

EXISTING CHANNEL IMPROVEMENTS

SECTION 3 / S2.01
3/8"=1'-0"

LEGEND

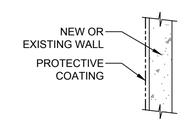

CONCRETE PROTECTIVE COATING TO BE APPLIED TO ALL SURFACES OF NEW AND EXISTING CHANNEL. PROTECTIVE COATING SYSTEM SHALL BE MEGAMIX I & II BY XYPEX. ALL SURFACE PREPARATION INCLUDING THE APPLICATION OF PRIMERS ALONG WITH CURING ARE TO BE PERFORMED IN ACCORDANCE W/ MANUFACTURER'S INSTRUCTIONS. A MANUFACTURER REPRESENTATIVE SHALL VISIT THE SITE PRIOR TO AND AFTER APPLICATION TO CONFIRM SURFACES HAVE BEEN PREPARED PROPERLY AND THE COATING SYSTEM HAS BEEN INSTALLED AS REQUIRED.

NOTES:
1. CONTRACTOR TO PROVIDE SIGNED AND SEALED DRAWINGS PREPARED BY A PROFESSIONAL ENGINEER REGISTERED IN THE STATE OF FLORIDA FOR THE TOP SLAB OF THE CHANNEL ALONG WITH ANY OTHER MODIFICATIONS NECESSARY TO FACILITATE DEMOLITION AND INSTALLATION OF THE COATING SYSTEM. WHERE SLAB IS DESIGNED TO BE PRECAST, PROVIDE WATERSTOPS AT EACH BEARING LOCATION SUCH AS SIKA LOCKSTOP.
2. PROVIDE XYPEX C-1000 NF ADDITIVE FOR NEW CONCRETE AT EXISTING CHANNEL AT A DOSAGE RATE OF 1.5% PER CY.

BID DOCUMENTS

IF THIS BAR DOES NOT MEASURE 1" THEN DRAWING HAS BEEN REDUCED SCALE ACCORDINGLY
0 1"

WEKIVA ENGINEERING
711 N ORANGE AVE, SUITE A
WINTER PARK, FL 32789
P: 321 972.4989 CA Lic. No: 31920
WEKIVA PROJECT #16-120

King ENGINEERING ASSOCIATES, INC.
4921 Memorial Highway
One Memorial Center, Suite 300
Tampa, Florida 33634
Phone 813 880-8881
Fax 813 880-8882
www.kingengineering.com
Engineering License #2610

RECORD DRAWINGS
SURVEYED BY: DRAWN BY:
REVIEWED BY: PROJECT ENGINEER DATE
APPROVED BY: ENGINEER DATE

REVISION	BY	DATE

CITY OF CLEARWATER, FLORIDA
ENGINEERING DEPARTMENT
100 S. MYRTLE AVE.
CLEARWATER, FL 33756

CALL 811 SUNSHINE STATE ONE CALL OF FLORIDA www.callsunshine.com (800) 432-4770

NORTHEAST WRF GRIT REMOVAL, SALSNES FILTER AND EQUALIZATION SYSTEM IMPROVEMENTS

PUMP BUILDING SECTION AND DETAILS

DWG NAME: –	FIELD BOOK: –	SURVEYED BY: –	SCALE: VERT. AS SHOWN
CONTRACT NO.: 15-0045-UT	DATE DRAWN: FEBRUARY 2019	DRAWN BY: JVS	HORIZ. AS SHOWN
JOB NO.: 2110-210-002	DESIGNED BY: JVS	CHECKED BY: DSM	SHEET NO.: ## OF 117

APPROVED FOR CONSTRUCTION

COPYRIGHT 2019 KING ENGINEERING ASSOCIATES, INC. DRAWINGS AND CONCEPTS MAY NOT BE USED OR REPRODUCED WITHOUT WRITTEN PERMISSION. CONSULT WITH KING ENGINEERING ASSOCIATES, INC. PRIOR TO REPRODUCING THIS DOCUMENT IN COMPLIANCE WITH F.S. CHAPTER 119.

O:\ENV_ENG\2110\210\002\production\Drawings\S2.01-2.02 2019-03-25.dwg, March 18, 2020 2:37 PM, King Engineering Associate Inc.

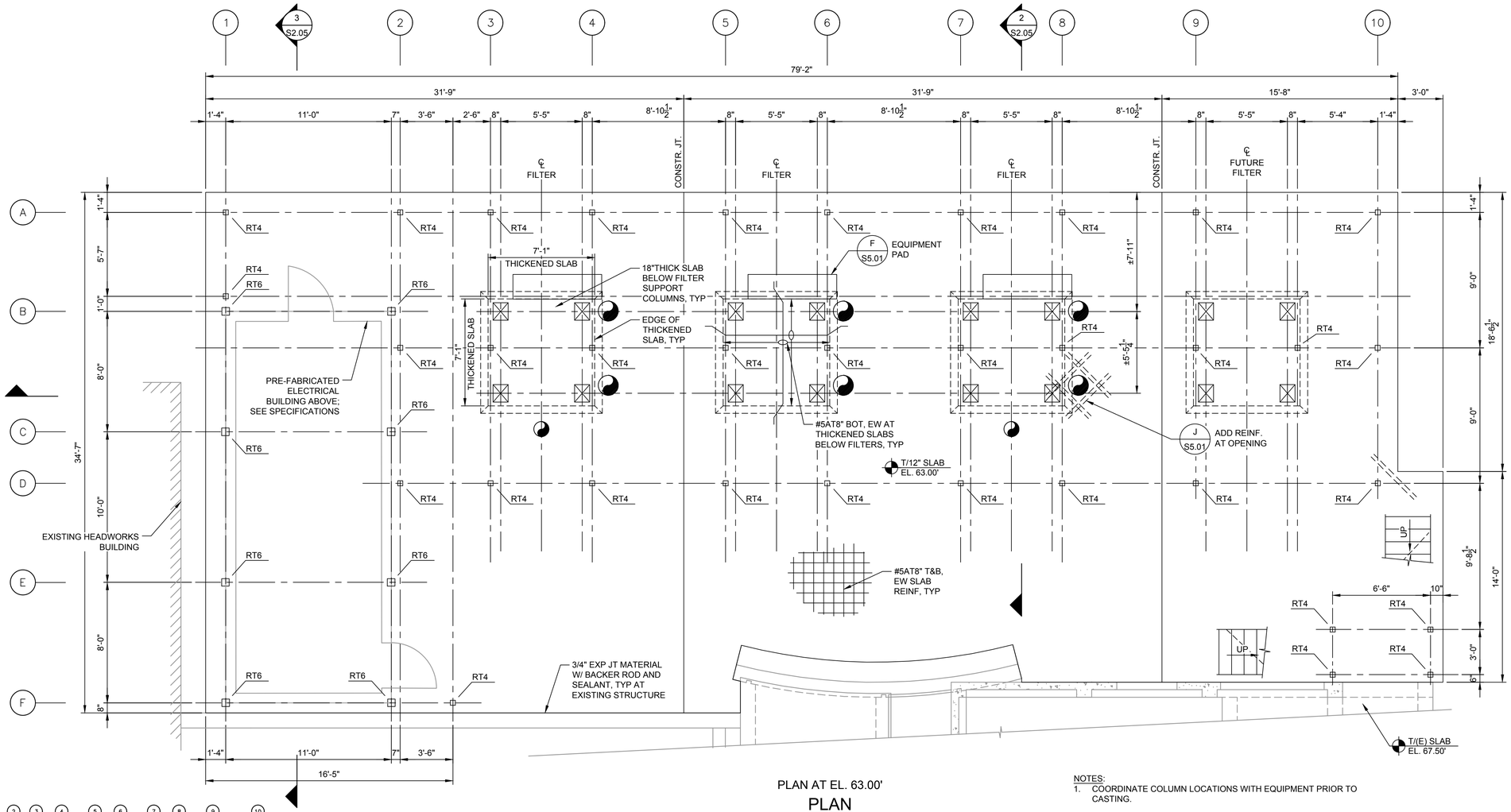

PLAN AT EL. 63.00'

PLAN

1/4"=1'-0"

NOTES:

1. COORDINATE COLUMN LOCATIONS WITH EQUIPMENT PRIOR TO CASTING.

SHAPE LEGEND: ALUMINUM

- RT6: 6x6x3/8
- RT4: 4x4X1/4

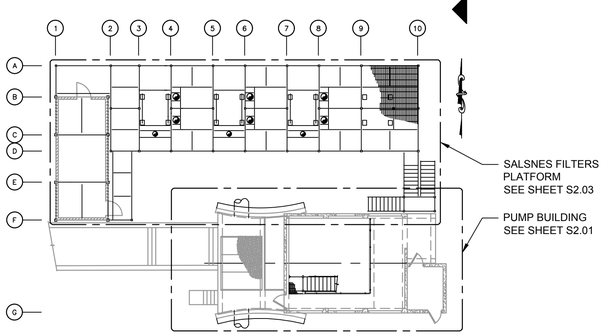

KEY PLAN

N.T.S.

BID DOCUMENTS

IF THIS BAR DOES NOT MEASURE 1" THEN DRAWING HAS BEEN REDUCED SCALE ACCORDINGLY

WEKIVA ENGINEERING
711 N ORANGE AVE, SUITE A
WINTER PARK, FL 32789
P: 321 972 4989 CA Lic. No: 31920
WEKIVA PROJECT #16-120

King ENGINEERING ASSOCIATES, INC.
4921 Memorial Highway
One Memorial Center, Suite 300
Tampa, Florida 33634
Phone 813 880-8881
Fax 813 880-8882
www.kingengineering.com
Engineering License #2610

RECORD DRAWINGS

SURVEYED BY: DRAWN BY:
REVIEWED BY: PROJECT ENGINEER DATE
APPROVED BY: ENGINEER DATE

REVISION	BY	DATE

CITY OF CLEARWATER, FLORIDA
ENGINEERING DEPARTMENT
100 S. MYRTLE AVE.
CLEARWATER, FL 33756

CALL 811 SUNSHINE STATE ONE CALL OF FLORIDA www.callsunshine.com (800) 432-4770

NORTHEAST WRF GRIT REMOVAL, SALSNES FILTER AND EQUALIZATION SYSTEM IMPROVEMENTS

SALSNES FILTERS FOUNDATION PLAN

DWG NAME: –	FIELD BOOK: –	SURVEYED BY: –	SCALE: VERT. AS SHOWN
CONTRACT NO.: 15-0045-UT	DATE DRAWN: FEBRUARY 2019	DRAWN BY: JVS	HORIZ. AS SHOWN
JOB NO.: 2110-210-002	DESIGNED BY: JVS	CHECKED BY: DSM	SHEET NO.: ## OF 117

APPROVED FOR CONSTRUCTION

© COPYRIGHT 2019 KING ENGINEERING ASSOCIATES, INC. DRAWINGS AND CONCEPTS MAY NOT BE USED OR REPRODUCED WITHOUT WRITTEN PERMISSION. CONSULTANT HEREBY GRANTS PERMISSION TO GOVERNMENTAL AGencies TO REPRODUCE THIS DOCUMENT IN COMPLIANCE WITH F.S. CHAPTER 119.

O:\ENV_ENG\2110\210\002\production\Drawings\S2.03-2.05 2019-03-25.dwg, March 18, 2020 2:37 PM, King Engineering Associate Inc.

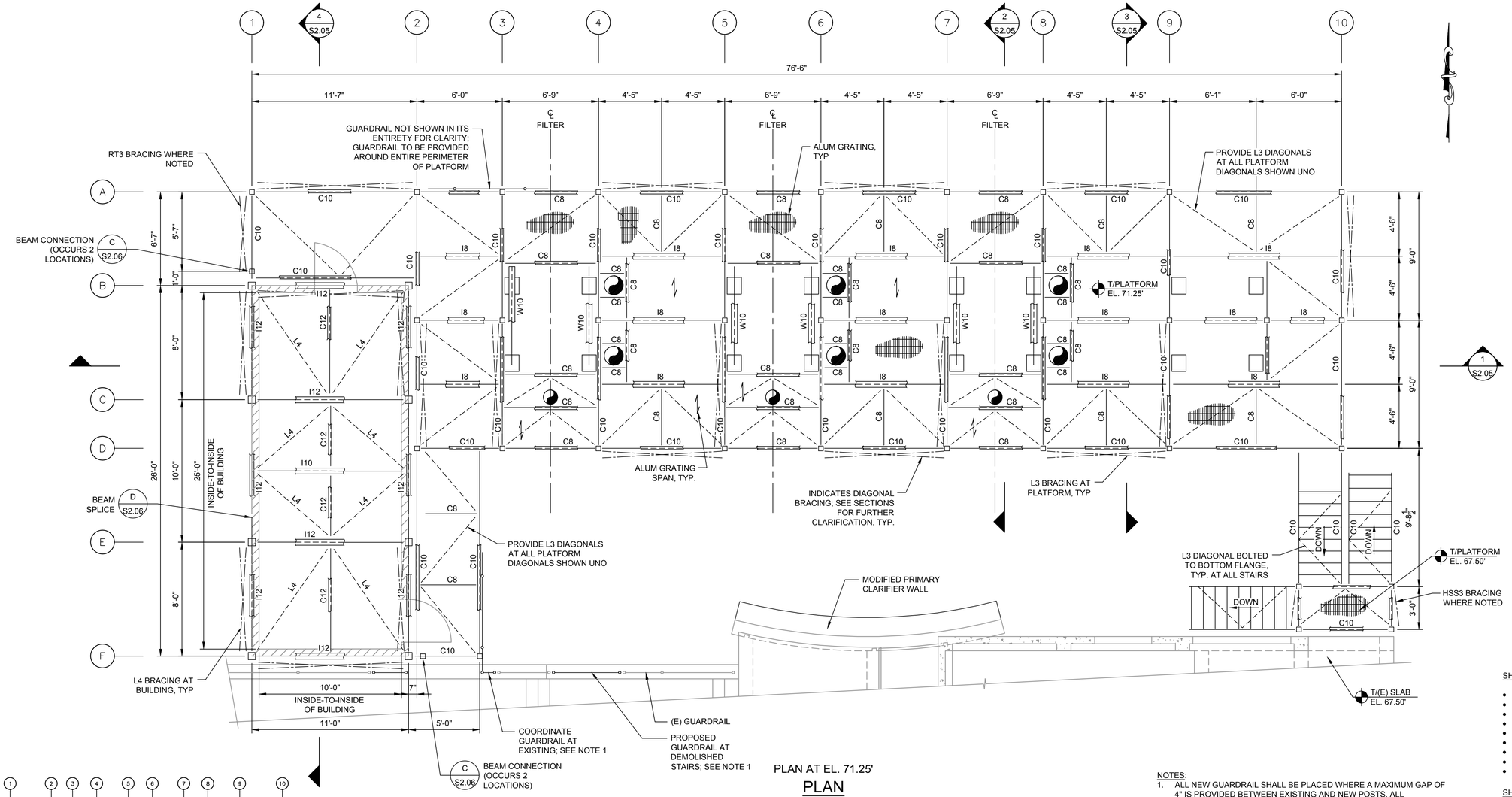

PLAN AT EL. 71.25'

PLAN

1/4"=1'-0"

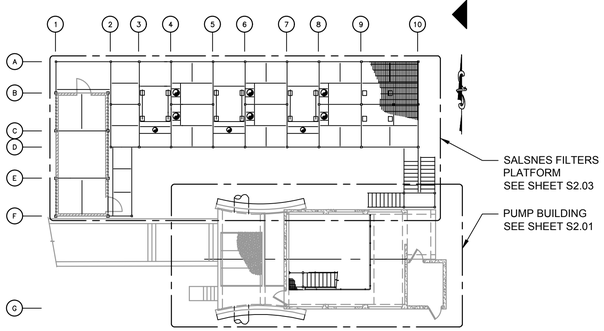

KEY PLAN

N.T.S.

SHAPE LEGEND: ALUMINUM

- C12: C12x8.64
- C10: C10x8.36
- C8: C8x5.79
- I12: I12x11.7
- I8: I8X7.02
- RT4: 4x4X1/4
- RT3: 3X3X3/16
- L4: L4x4x1/4
- L3: L3X3X1/4

SHAPE LEGEND: PAINTED STEEL

- W10: W10x33

NOTES:

1. ALL NEW GUARDRAIL SHALL BE PLACED WHERE A MAXIMUM GAP OF 4" IS PROVIDED BETWEEN EXISTING AND NEW POSTS. ALL DIMENSIONS SHALL BE FIELD VERIFIED PRIOR TO ANY FABRICATION.
2. THE PRE-FABRICATED ELECTRICAL BUILDING SHOP DRAWING SHALL BE SUBMITTED PRIOR TO ANY ALUMINUM FABRICATION. THE FRAMING SUPPORTING THE BUILDING MUST BE REVIEWED AND CONFIRMED BY THE ENGINEER AND MAY BE ADJUSTED TO SUIT THE REQUIREMENTS OF THE BUILDING SKID.
3. PROVIDE BANDING IN GRATING AROUND ALL PIPE PENETRATIONS.
4. COORDINATE LOCATION OF ALUMINUM BEAMS WITH EQUIPMENT AS REQUIRED PRIOR TO ANY FABRICATION.

BID DOCUMENTS

IF THIS BAR DOES NOT MEASURE 1" THEN DRAWING HAS BEEN REDUCED SCALE ACCORDINGLY 0 1"

WEKIVA ENGINEERING
711 N ORANGE AVE, SUITE A
WINTER PARK, FL 32789
P: 321.972.4989 CA Lic. No: 31920
WEKIVA PROJECT #16-120

King ENGINEERING ASSOCIATES, INC.
4921 Memorial Highway
One Memorial Center, Suite 300
Tampa, Florida 33634
Phone 813 880-8881
Fax 813 880-8882
www.kingengineering.com
Engineering License #2610

RECORD DRAWINGS

SURVEYED BY:	DRAWN BY:
REVIEWED BY:	PROJECT ENGINEER / DATE
APPROVED BY:	ENGINEER / DATE

REVISION	BY	DATE

CITY OF CLEARWATER, FLORIDA
ENGINEERING DEPARTMENT
100 S. MYRTLE AVE.
CLEARWATER, FL 33756

CALL 811 SUNSHINE STATE ONE CALL OF FLORIDA www.callsunshine.com (800) 432-4770 MIN. 48 HOURS BEFORE YOU EXCAVATE

NORTHEAST WRF GRIT REMOVAL, SALSNES FILTER AND EQUALIZATION SYSTEM IMPROVEMENTS

SALSNES FILTERS PLATFORM PLAN

DWG NAME: –	FIELD BOOK: –	SURVEYED BY: –	SCALE: VERT. AS SHOWN
CONTRACT NO.: 15-0045-UT	DATE DRAWN: FEBRUARY 2019	DRAWN BY: JVS	HORIZ. AS SHOWN
JOB NO.: 2110-210-002	DESIGNED BY: JVS	CHECKED BY: DSM	SHEET NO.: ## OF 117
APPROVED FOR CONSTRUCTION			

© COPYRIGHT 2019 KING ENGINEERING ASSOCIATES, INC. DRAWINGS AND CONCEPTS MAY NOT BE USED OR REPRODUCED WITHOUT WRITTEN PERMISSION. CONSULTANTS HERE GRANTED PERMISSION TO REPRODUCE THIS DOCUMENT IN COMPLIANCE WITH F.S. CHAPTER 119.

O:\ENV_ENG\2110\210\002\production\Drawings\S2.03-2.05 2019-03-25.dwg, March 18, 2020 2:37 PM, King Engineering Associate Inc.

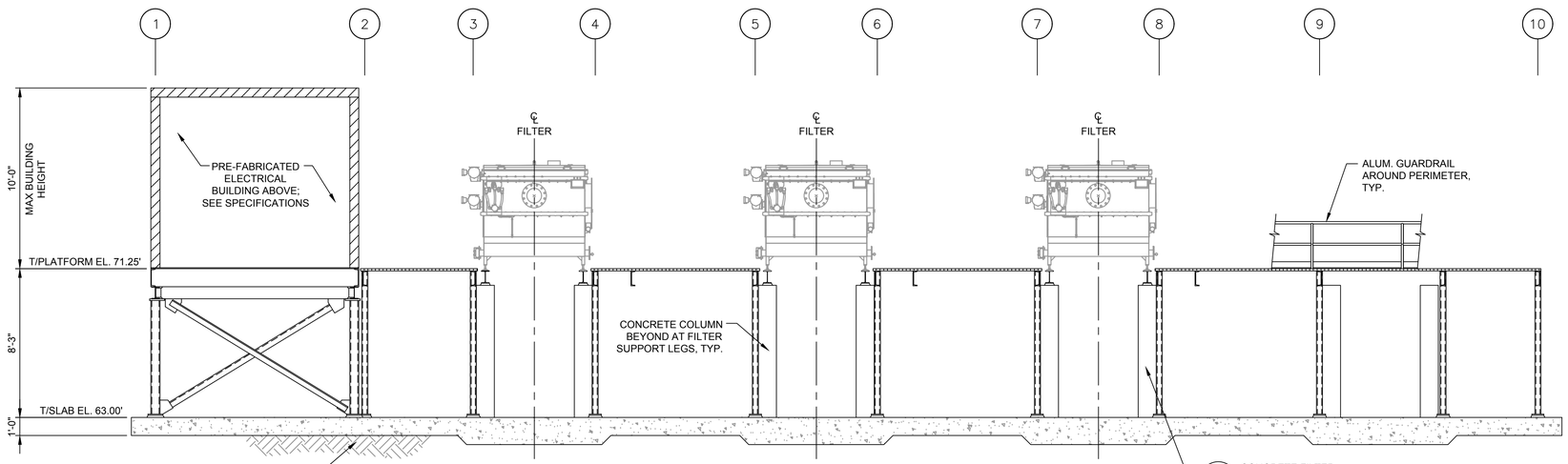

SECTION 1 / S2.03
1/4"=1'-0"

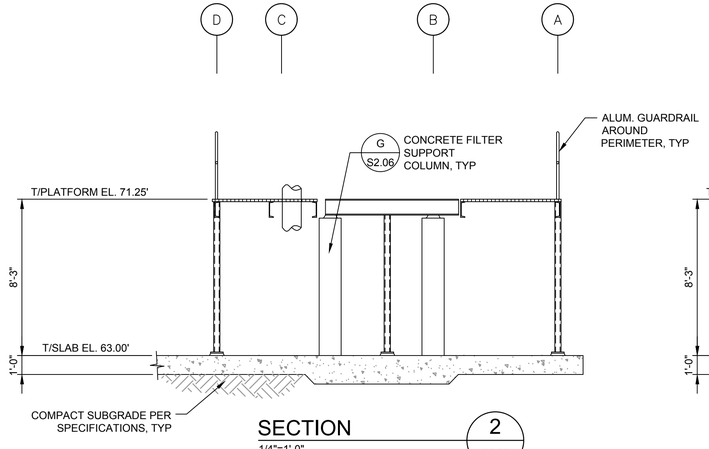

SECTION 2 / S2.03
1/4"=1'-0"

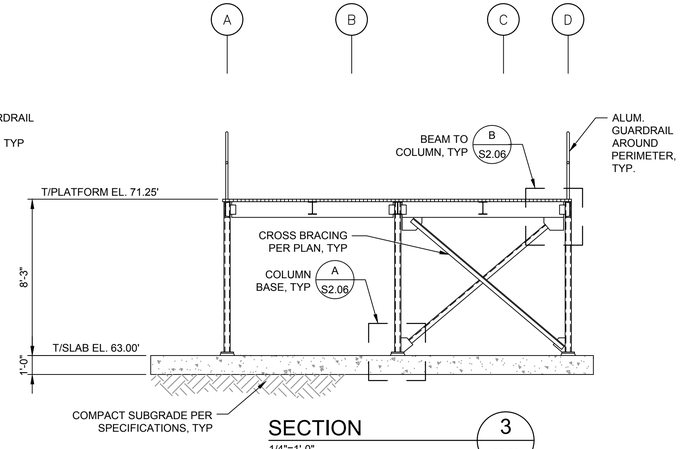

SECTION 3 / S2.03
1/4"=1'-0"

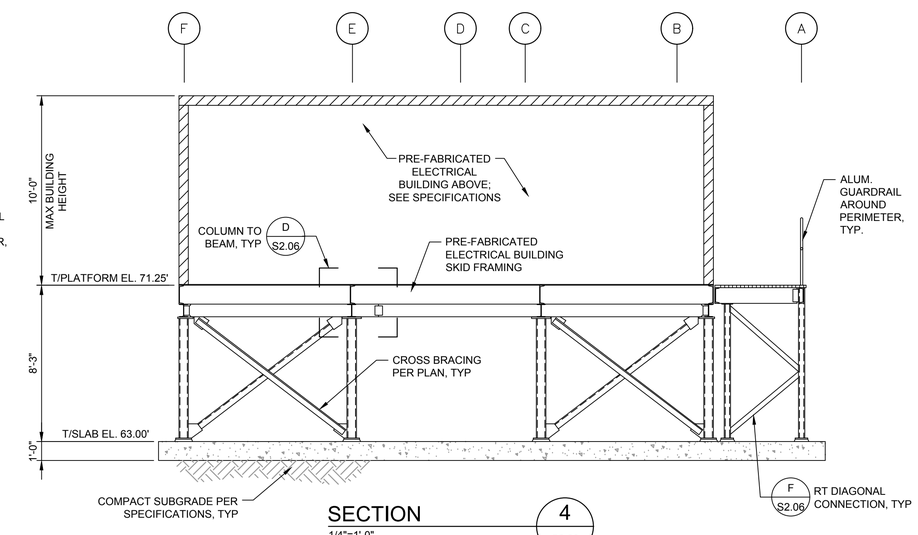

SECTION 4 / S2.03
1/4"=1'-0"

BID DOCUMENTS

IF THIS BAR DOES NOT MEASURE 1" THEN DRAWING HAS BEEN REDUCED SCALE ACCORDINGLY
0 1"

WEKIVA ENGINEERING
711 N ORANGE AVE, SUITE A
WINTER PARK, FL 32789
P: 321.972.4989 CA Lic. No: 31920
WEKIVA PROJECT #16-120

King ENGINEERING ASSOCIATES, INC.
4921 Memorial Highway
One Memorial Center, Suite 300
Tampa, Florida 33634
Phone 813 880-8881
Fax 813 880-8882
www.kingengineering.com
Engineering License #2610

RECORD DRAWINGS
SURVEYED BY: DRAWN BY:
REVIEWED BY: PROJECT ENGINEER DATE
APPROVED BY: ENGINEER DATE

REVISION	BY	DATE

CITY OF CLEARWATER, FLORIDA
ENGINEERING DEPARTMENT
100 S. MYRTLE AVE.
CLEARWATER, FL 33756

CALL 811 SUNSHINE STATE ONE CALL OF FLORIDA www.callsunshine.com (800) 432-4770

NORTHEAST WRF GRIT REMOVAL, SALSNES FILTER AND EQUALIZATION SYSTEM IMPROVEMENTS

SALSNES FILTERS SECTIONS

DWG NAME: –	FIELD BOOK: –	SURVEYED BY: –	SCALE: VERT. AS SHOWN
CONTRACT NO.: 15-0045-UT	DATE DRAWN: FEBRUARY 2019	DRAWN BY: JVS	HORIZ. AS SHOWN
JOB NO.: 2110-210-002	DESIGNED BY: JVS	CHECKED BY: DSM	SHEET NO.: ## OF 117
APPROVED FOR CONSTRUCTION			

© COPYRIGHT 2019 KING ENGINEERING ASSOCIATES, INC. DRAWINGS AND CONCEPTS MAY NOT BE USED OR REPRODUCED WITHOUT WRITTEN PERMISSION. CONSULT WITH KING ENGINEERING ASSOCIATES, INC. REGARDING REPRODUCTION OF THIS DOCUMENT IN COMPLIANCE WITH F.S. CHAPTER 119.

O:\ENV_ENG\2110\210\002\production\Drawings\S2.03-2.05 2019-03-25.dwg, March 18, 2020 2:37 PM, King Engineering Associate Inc.

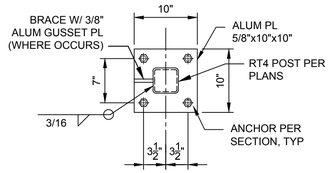

PLAN

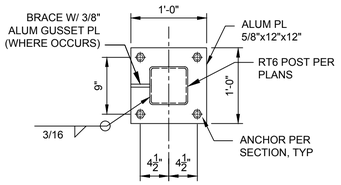

PLAN

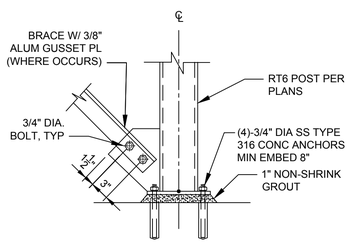

COLUMN BASE CONNECTION

DETAIL A
1"=1'-0" S2.05

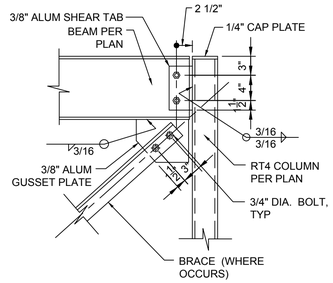

BEAM TO COLUMN CONNECTION AT RT4

DETAIL B
1"=1'-0" S2.05

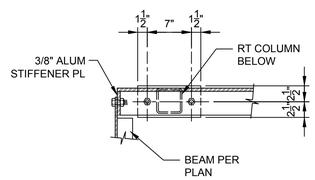

PLAN

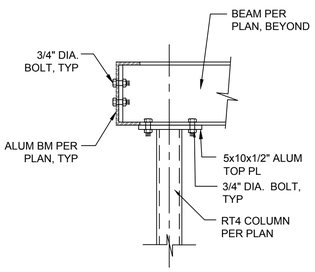

SECTION

BEAM TO CORNER COLUMN CONNECTION FOR RT4 AT BUILDING

DETAIL C
1"=1'-0" S2.05

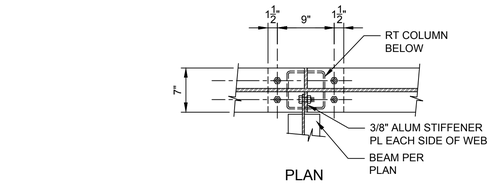

PLAN

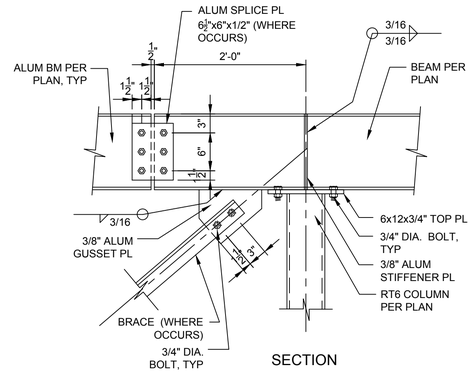

SECTION

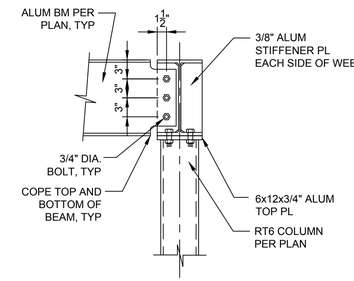

SECTION

BEAM TO COLUMN CONNECTION AT RT6

DETAIL D
1"=1'-0" S2.05

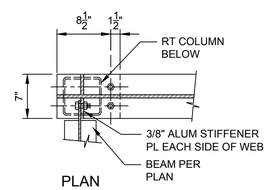

PLAN

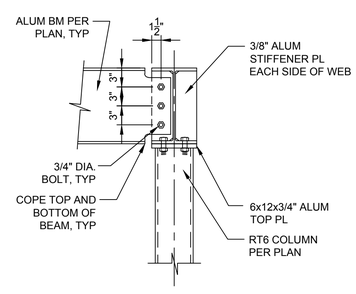

SECTION

BEAM TO CORNER COLUMN CONNECTION AT RT6

DETAIL E
1"=1'-0" S2.05

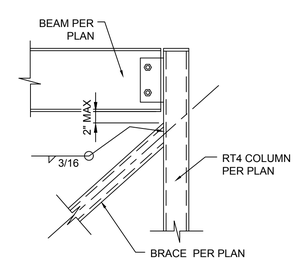

RT DIAGONAL BRACING CONNECTION

DETAIL F
1"=1'-0" S2.05

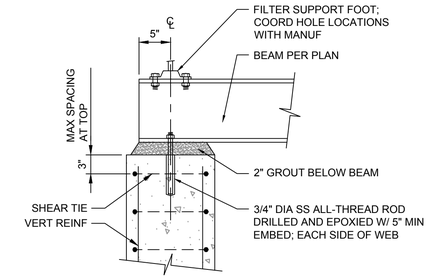

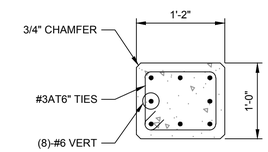

PLAN

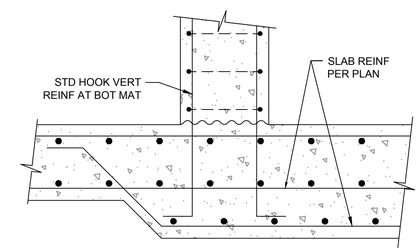

CONCRETE COLUMN AT FILTERS

DETAIL G
1"=1'-0" S2.05

BID DOCUMENTS

WEKIVA ENGINEERING
711 N ORANGE AVE, SUITE A
WINTER PARK, FL 32789
P: 321.972.4989 CA Lic. No: 31920
WEKIVA PROJECT #16-120

King ENGINEERING ASSOCIATES, INC.
4921 Memorial Highway
One Memorial Center, Suite 300
Tampa, Florida 33634
Phone 813 880-8881
Fax 813 880-8882
www.kingengineering.com
Engineering License #2610

IF THIS BAR DOES NOT MEASURE 1" THEN DRAWING HAS BEEN REDUCED SCALE ACCORDINGLY
0 1"

RECORD DRAWINGS
SURVEYED BY: DRAWN BY:
REVIEWED BY: PROJECT ENGINEER DATE
APPROVED BY: ENGINEER DATE

REVISION	BY	DATE

CITY OF CLEARWATER, FLORIDA
ENGINEERING DEPARTMENT
100 S. MYRTLE AVE.
CLEARWATER, FL 33756

CALL 811 SUNSHINE STATE ONE CALL OF FLORIDA
www.callsunshine.com
(800) 432-4770
NOT 48 HOURS BEFORE YOU EXCAVATE

NORTHEAST WRF GRIT REMOVAL, SALSNES FILTER AND EQUALIZATION SYSTEM IMPROVEMENTS

SALSNES FILTERS SECTIONS

DWG NAME: –	FIELD BOOK: –	SURVEYED BY: –	SCALE: VERT. AS SHOWN
CONTRACT NO.: 15-0045-UT	DATE DRAWN: FEBRUARY 2019	DRAWN BY: JVS	HORIZ. AS SHOWN
JOB NO.: 2110-210-002	DESIGNED BY: JVS	CHECKED BY: DSM	SHEET NO.: ## OF 117
APPROVED FOR CONSTRUCTION			

© COPYRIGHT 2019 KING ENGINEERING ASSOCIATES, INC. DRAWINGS AND CONCEPTS MAY NOT BE USED OR REPRODUCED WITHOUT WRITTEN PERMISSION. CONSULTANT HEREBY GRANTS PERMISSION TO GOVERNMENTAL AGENCIES TO REPRODUCE THIS DOCUMENT IN COMPLIANCE WITH F.S. CHAPTER 119.

O:\ENV_ENG\2110\210\002\production\Drawings\S2.03-2.05 2019-03-25.dwg, March 18, 2020 2:37 PM, King Engineering Associate Inc.

S3.00

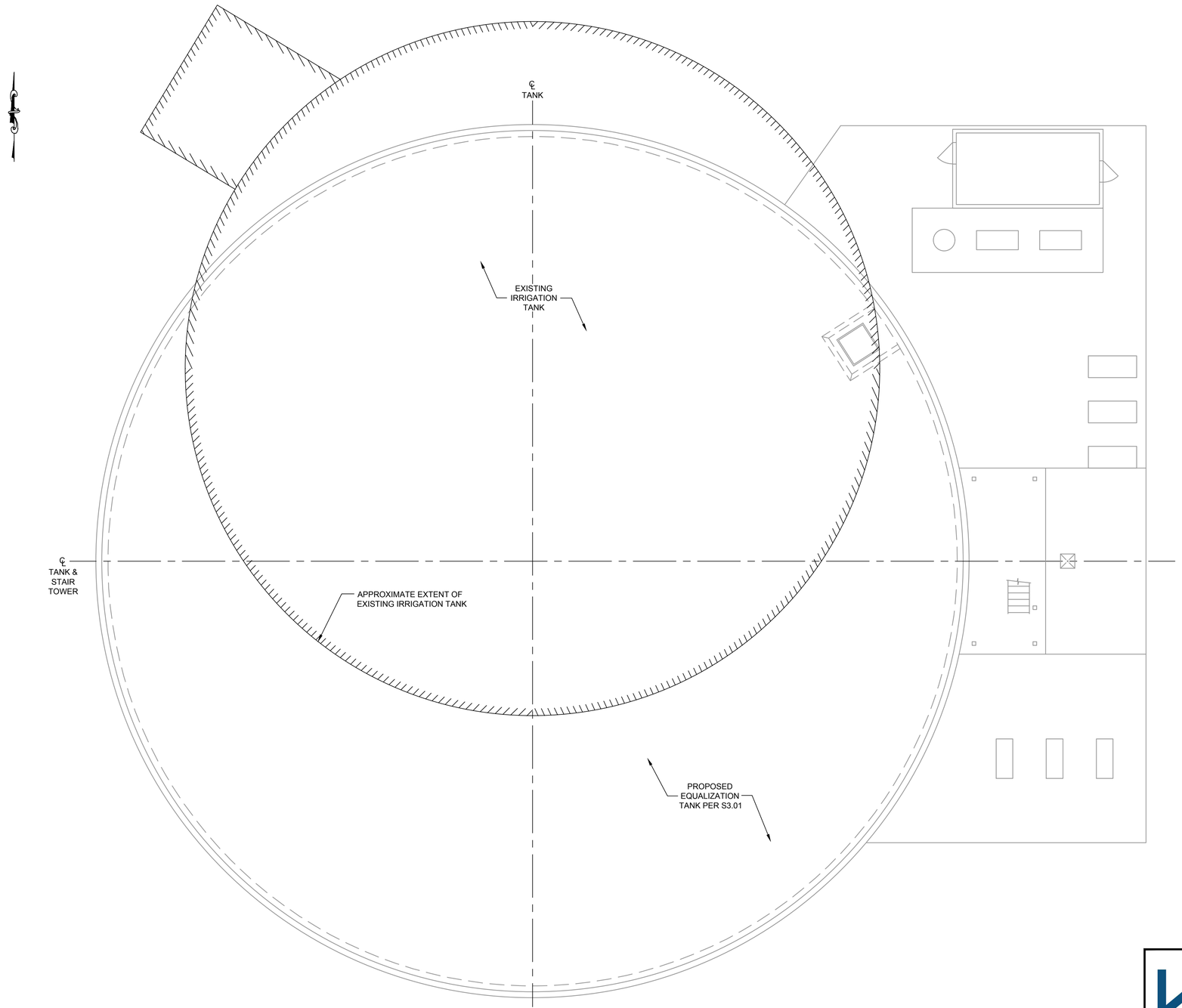

EXCAVATION AND BACKFILL

PLAN

1/8"=1'-0"

NOTES:

1. SEE SHEET C1.02, C1.04, AND M3.01 FOR DEMOLITION OF THE EXISTING IRRIGATION TANK. THE AREA UNDER THE EXISTING TANK AND THE PROPOSED EQUALIZATION TANK PLUS 10FT OUTSIDE THE PERIMETER OF THESE TWO TANKS SHALL BE EXCAVATED TO A MINIMUM ELEVATION OF 46.00'. THIS AREA SHALL BE BACKFILLED AND COMPACTED PER SPECIFICATIONS. COORDINATE WITH "C" DRAWINGS FOR LOCATIONS OF TANKS RELATIVE TO EACH OTHER AND ANY EXISTING DIMENSIONS.

BID DOCUMENTS

IF THIS BAR DOES NOT MEASURE 1" THEN DRAWING HAS BEEN REDUCED SCALE ACCORDINGLY

0 1"

WEKIVA ENGINEERING
711 N ORANGE AVE, SUITE A
WINTER PARK, FL 32789
P: 321.972.4989 CA Lic. No: 31920
WEKIVA PROJECT #16-120

King ENGINEERING ASSOCIATES, INC.
4921 Memorial Highway
One Memorial Center, Suite 300
Tampa, Florida 33634
Phone 813 880-8881
Fax 813 880-8882
www.kingengineering.com
Engineering License #2610

© COPYRIGHT 2019 KING ENGINEERING ASSOCIATES, INC. DRAWINGS AND CONCEPTS MAY NOT BE USED OR REPRODUCED WITHOUT WRITTEN PERMISSION. CONSULT WRITTEN GRANTED SPECIFICALLY TO GOVERNMENTAL AGENCIES TO REPRODUCE THIS DOCUMENT IN COMPLIANCE WITH F.S. CHAPTER 119.

O:\ENV_ENG\2110\210\002\production\Drawings\S3.00-3.02 2019-03-25.dwg, March 18, 2020 2:37 PM, King Engineering Associate Inc.

RECORD DRAWINGS			
SURVEYED BY:	DRAWN BY:		
REVIEWED BY:			
PROJECT ENGINEER	DATE		
APPROVED BY:			
ENGINEER	DATE	REVISION	BY / DATE

CITY OF CLEARWATER, FLORIDA
ENGINEERING DEPARTMENT
100 S. MYRTLE AVE.
CLEARWATER, FL 33756

CALL 811 SUNSHINE STATE ONE CALL OF FLORIDA www.callsunshine.com (800) 432-4770

NORTHEAST WRF GRIT REMOVAL, SALSNES FILTER AND EQUALIZATION SYSTEM IMPROVEMENTS

EQUALIZATION TANK EXCAVATION AND BACKFILL PLAN

DWG NAME: –	FIELD BOOK: –	SURVEYED BY: –	SCALE: VERT. AS SHOWN
CONTRACT NO.: 15-0045-UT	DATE DRAWN: FEBRUARY 2019	DRAWN BY: JVS	HORIZ. AS SHOWN
JOB NO.: 2110-210-002	DESIGNED BY: JVS	CHECKED BY: DSM	SHEET NO.: ## OF 117

APPROVED FOR CONSTRUCTION

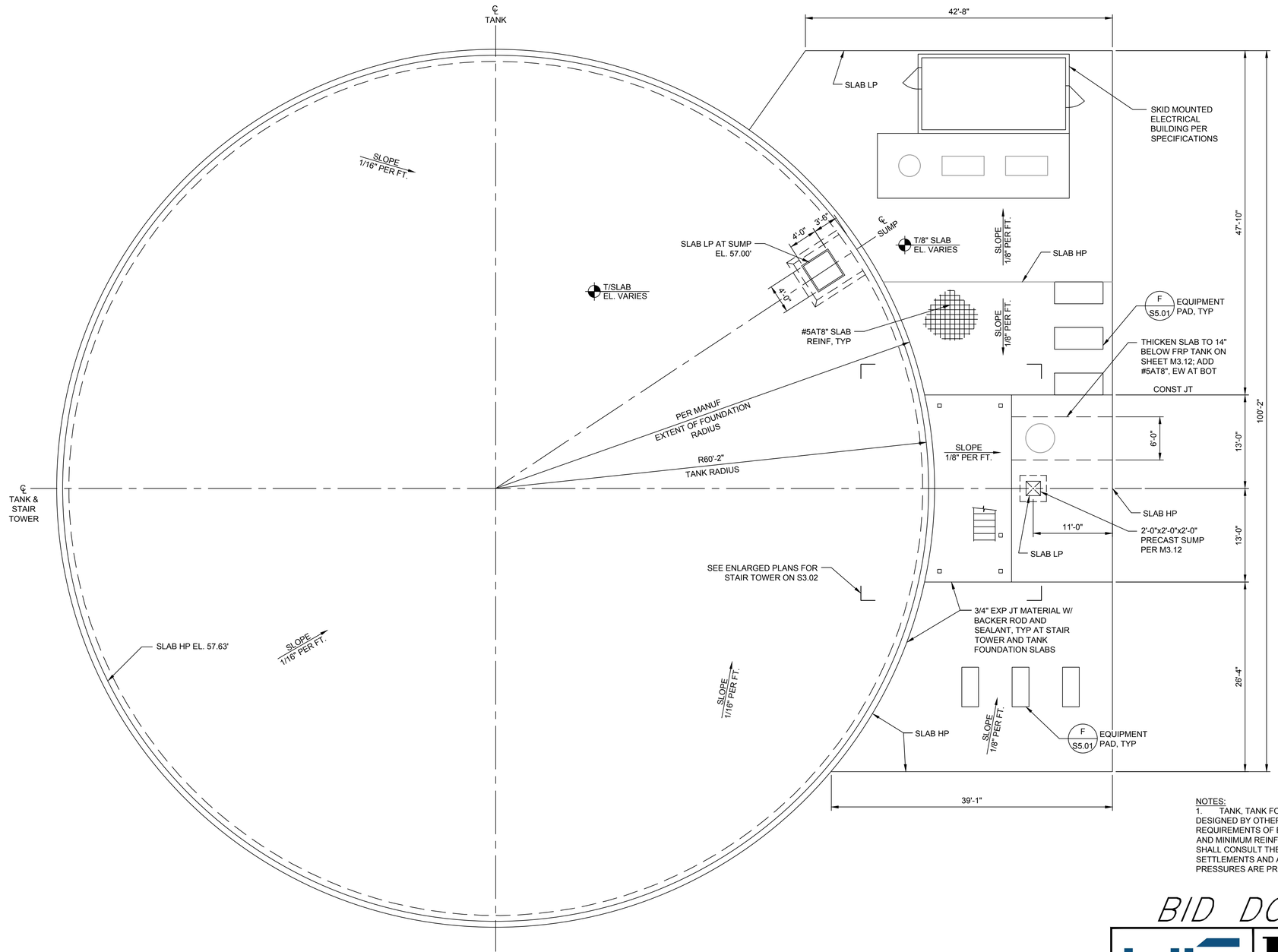

NOTES:
1. TANK, TANK FOUNDATION, AND BASE SLAB ARE TO BE DESIGNED BY OTHERS. SEE SPECIFICATION 13210 FOR REQUIREMENTS OF BASE SLAB AND FOUNDATION THICKNESS AND MINIMUM REINFORCEMENT. TANK FOUNDATION DESIGNER SHALL CONSULT THE GEOTECHNICAL REPORT WHERE EXPECTED SETTLEMENTS AND ALLOWABLE FOUNDATION BEARING PRESSURES ARE PROVIDED.

FOUNDATION
PLAN
1/8"=1'-0"

BID DOCUMENTS

IF THIS BAR DOES NOT MEASURE 1" THEN DRAWING HAS BEEN REDUCED SCALE ACCORDINGLY
0 1"

WEKIVA ENGINEERING
711 N ORANGE AVE, SUITE A
WINTER PARK, FL 32789
P: 321.972.4989 CA Lic. No: 31920
WEKIVA PROJECT #16-120

King ENGINEERING ASSOCIATES, INC.
4921 Memorial Highway
One Memorial Center, Suite 300
Tampa, Florida 33634
Phone 813 880-8881
Fax 813 880-8882
www.kingengineering.com
Engineering License #2610

© COPYRIGHT 2019 KING ENGINEERING ASSOCIATES, INC. DRAWINGS AND CONCEPTS MAY NOT BE USED OR REPRODUCED WITHOUT WRITTEN PERMISSION. CONSULT WITH KING ENGINEERING ASSOCIATES, INC. PRIOR TO REPRODUCING THIS DOCUMENT IN WHOLE OR IN PART. IN COMPLIANCE WITH F.S. CHAPTER 119.

RECORD DRAWINGS				
SURVEYED BY:	DRAWN BY:			
REVIEWED BY: PROJECT ENGINEER	DATE			
APPROVED BY: ENGINEER	DATE	REVISION	BY	DATE

CITY OF CLEARWATER, FLORIDA
ENGINEERING DEPARTMENT
100 S. MYRTLE AVE.
CLEARWATER, FL 33756

CALL 811 SUNSHINE STATE ONE CALL OF FLORIDA www.callsunshine.com (800) 432-4770

NORTHEAST WRF GRIT REMOVAL, SALSNES FILTER AND EQUALIZATION SYSTEM IMPROVEMENTS

EQUALIZATION TANK PLAN

DWG NAME: –	FIELD BOOK: –	SURVEYED BY: –	SCALE: VERT. AS SHOWN
CONTRACT NO.: 15-0045-UT	DATE DRAWN: FEBRUARY 2019	DRAWN BY: JVS	HORIZ. AS SHOWN
JOB NO.: 2110-210-002	DESIGNED BY: JVS	CHECKED BY: DSM	SHEET NO.: ## OF 117
APPROVED FOR CONSTRUCTION			

O:\ENV_ENG\2110\210\002\production\Drawings\S3.00-3.02 2019-03-25.dwg, March 18, 2020 2:37 PM, King Engineering Associate Inc.

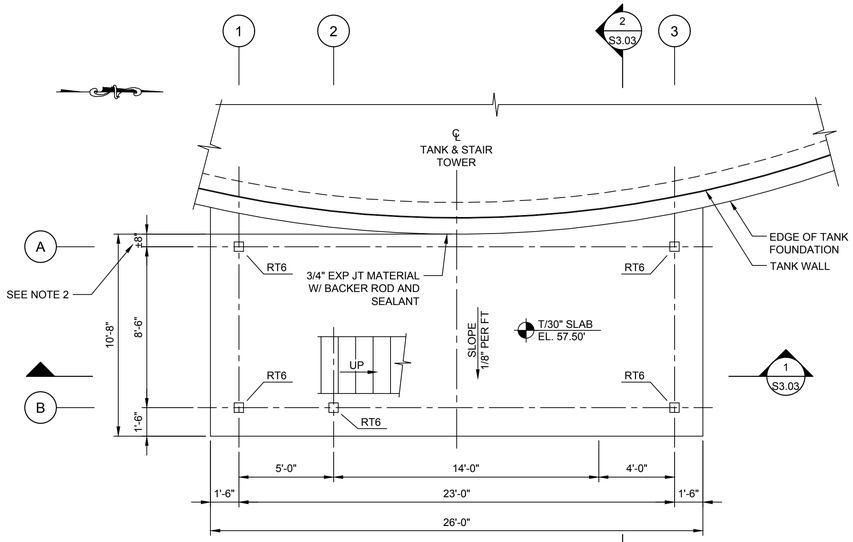

FOUNDATION AT EL. 57.50'

PLAN

1/4"=1'-0"

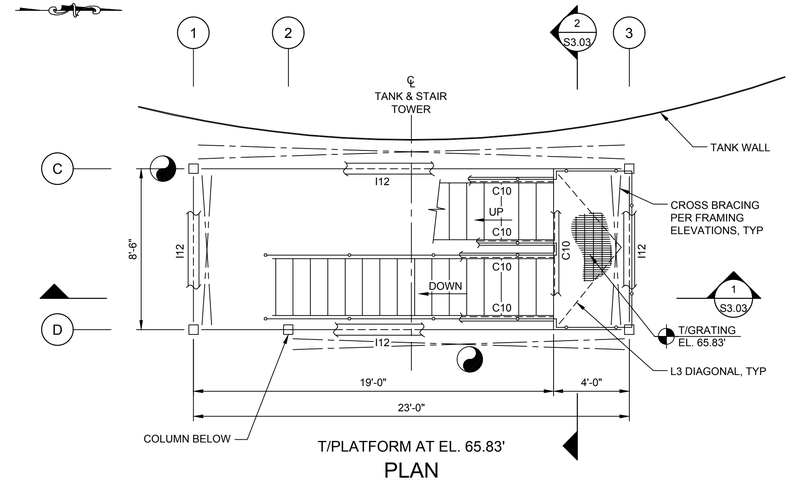

T/PLATFORM AT EL. 65.83'

PLAN

1/4"=1'-0"

SHAPE LEGEND: ALUMINUM

- C12: C12x8.64
- C10: C10x8.36
- C8: C8x5.79
- I12: I12x11.7
- I8: I8X7.02
- RT6: 6x6X3/8
- L4: L4x4x1/4
- L3: L3X3X1/4

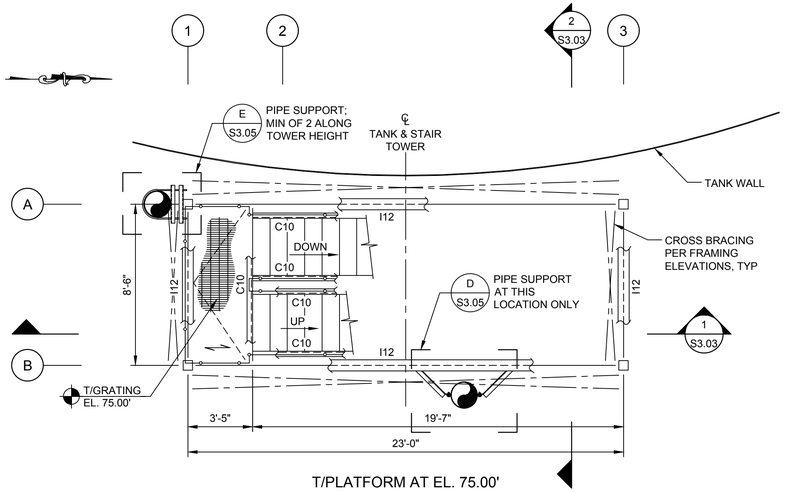

T/PLATFORM AT EL. 75.00'

PLAN

1/4"=1'-0"

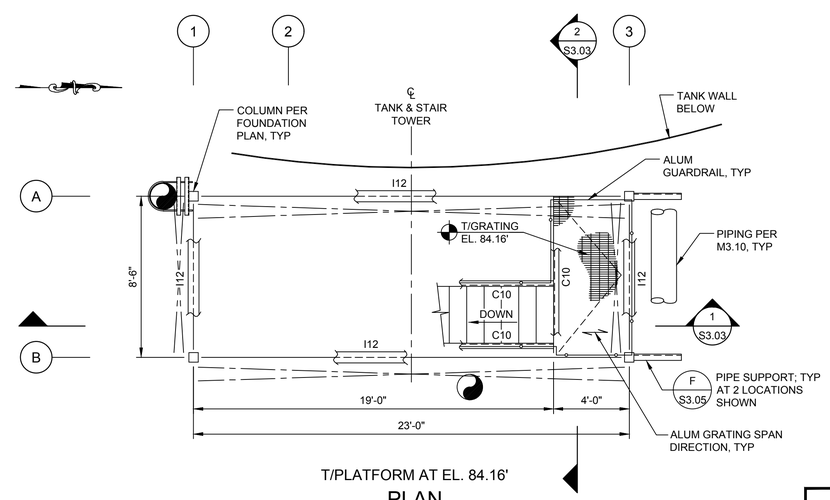

T/PLATFORM AT EL. 84.16'

PLAN

1/4"=1'-0"

NOTES:

1. ALL STAIR TOWER FRAMING SHOWN TO BE ALUMINUM PER SPECIFICATIONS.
2. DIMENSION SHALL BE COORDINATED W/ TANK FOUNDATION DESIGNER PRIOR TO ANY STEEL OR ALUMINUM FABRICATION.

BID DOCUMENTS

IF THIS BAR DOES NOT MEASURE 1" THEN DRAWING HAS BEEN REDUCED SCALE ACCORDINGLY

0 1"

WEKIVA ENGINEERING
711 N ORANGE AVE, SUITE A
WINTER PARK, FL 32789
P: 321.972.4989 CA Lic. No: 31920
WEKIVA PROJECT #16-120

King ENGINEERING ASSOCIATES, INC.
4921 Memorial Highway
One Memorial Center, Suite 300
Tampa, Florida 33634
Phone 813 880-8881
Fax 813 880-8882
www.kingengineering.com
Engineering License #2610

RECORD DRAWINGS

SURVEYED BY:	DRAWN BY:
REVIEWED BY:	PROJECT ENGINEER / DATE
APPROVED BY:	ENGINEER / DATE

REVISION	BY	DATE

CITY OF CLEARWATER, FLORIDA
ENGINEERING DEPARTMENT
100 S. MYRTLE AVE.
CLEARWATER, FL 33756

CALL 811 SUNSHINE STATE ONE CALL OF FLORIDA www.callsunshine.com (800) 432-4770 MIN. 48 HOURS BEFORE YOU EXCAVATE

NORTHEAST WRF GRIT REMOVAL, SALSNES FILTER AND EQUALIZATION SYSTEM IMPROVEMENTS

STAIR TOWER PLANS

DWG NAME: –	FIELD BOOK: –	SURVEYED BY: –	SCALE: VERT. AS SHOWN
CONTRACT NO.: 15-0045-UT	DATE DRAWN: FEBRUARY 2019	DRAWN BY: JVS	HORIZ. AS SHOWN
JOB NO.: 2110-210-002	DESIGNED BY: JVS	CHECKED BY: DSM	SHEET NO.: ## OF 117

APPROVED FOR CONSTRUCTION

© COPYRIGHT 2019 KING ENGINEERING ASSOCIATES, INC. DRAWINGS AND CONCEPTS MAY NOT BE USED OR REPRODUCED WITHOUT WRITTEN PERMISSION. CONSULT WITH KEA GRANTED SPECIFICALLY TO GOVERNMENTAL AGENCIES TO REPRODUCE THIS DOCUMENT IN COMPLIANCE WITH F.S. CHAPTER 119.

O:\ENV_ENG\2110\210\002\production\Drawings\S3.00-3.02 2019-03-25.dwg, March 18, 2020 2:37 PM, King Engineering Associate Inc.

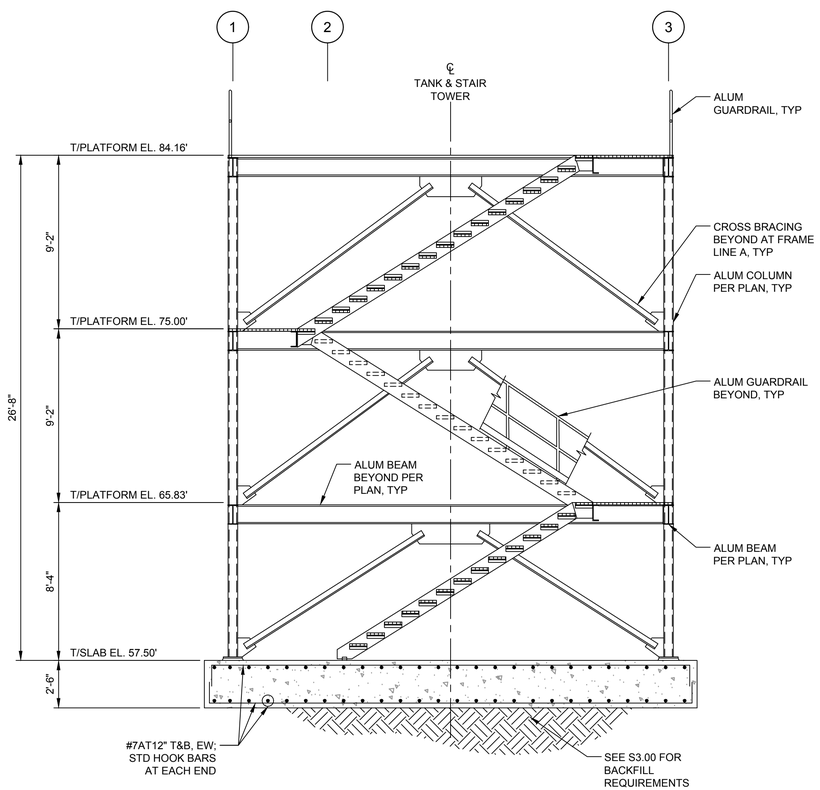

SECTION 1 / S3.02
1/4"=1'-0"

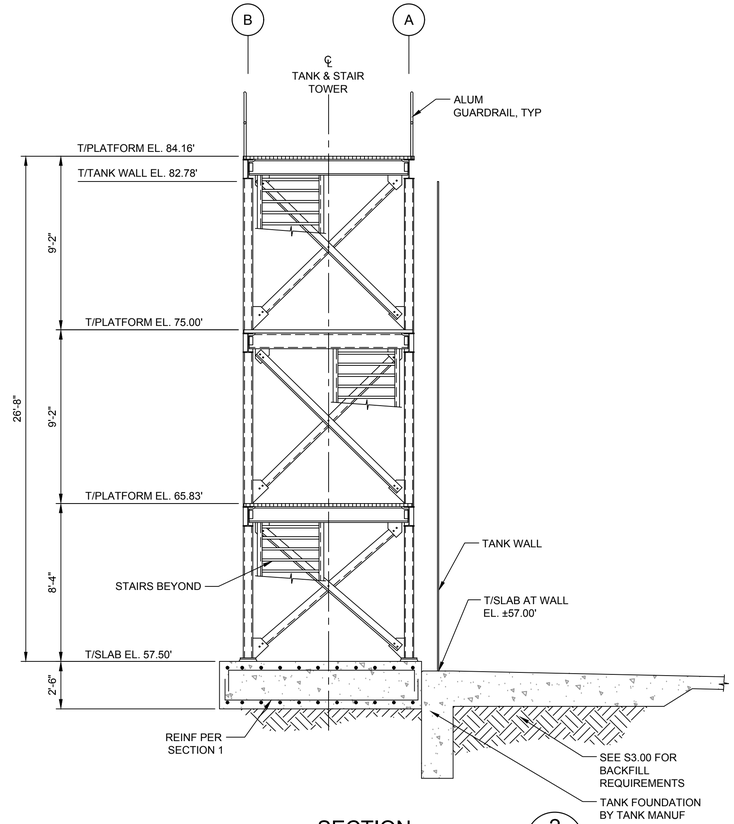

SECTION 2 / S3.02
1/4"=1'-0"

© COPYRIGHT 2019 KING ENGINEERING ASSOCIATES, INC. DRAWINGS AND CONCEPTS MAY NOT BE USED OR REPRODUCED WITHOUT WRITTEN PERMISSION. CONSULT WITH KING ENGINEERING ASSOCIATES, INC. REGARDING ANY REQUEST TO REPRODUCE THIS DOCUMENT IN COMPLIANCE WITH F.S. CHAPTER 119.

BID DOCUMENTS

IF THIS BAR DOES NOT MEASURE 1" THEN DRAWING HAS BEEN REDUCED SCALE ACCORDINGLY

WEKIVA ENGINEERING
711 N ORANGE AVE, SUITE A
WINTER PARK, FL 32789
P: 321.972.4989 CA Lic. No: 31920
WEKIVA PROJECT #16-120

King ENGINEERING ASSOCIATES, INC.
4921 Memorial Highway
One Memorial Center, Suite 300
Tampa, Florida 33634
Phone 813 880-8881
Fax 813 880-8882
www.kingengineering.com
Engineering License #2610

RECORD DRAWINGS
SURVEYED BY: | DRAWN BY:
REVIEWED BY: PROJECT ENGINEER DATE
APPROVED BY: ENGINEER DATE

REVISION	BY	DATE

CITY OF CLEARWATER, FLORIDA
ENGINEERING DEPARTMENT
100 S. MYRTLE AVE.
CLEARWATER, FL 33756

CALL 811 SUNSHINE STATE ONE CALL OF FLORIDA www.callsunshine.com (800) 432-4770

NORTHEAST WRF GRIT REMOVAL, SALSNES FILTER AND EQUALIZATION SYSTEM IMPROVEMENTS

STAIR TOWER SECTIONS

DWG NAME: –	FIELD BOOK: –	SURVEYED BY: –	SCALE: VERT. AS SHOWN
CONTRACT NO.: 15-0045-UT	DATE DRAWN: FEBRUARY 2019	DRAWN BY: JVS	HORIZ. AS SHOWN
JOB NO.: 2110-210-002	DESIGNED BY: JVS	CHECKED BY: DSM	SHEET NO.: ## OF 117
APPROVED FOR CONSTRUCTION			

O:\ENV_ENG\2110\210\002\production\Drawings\S3.00-3.02 2019-03-25.dwg, March 18, 2020 2:37 PM, King Engineering Associate Inc.

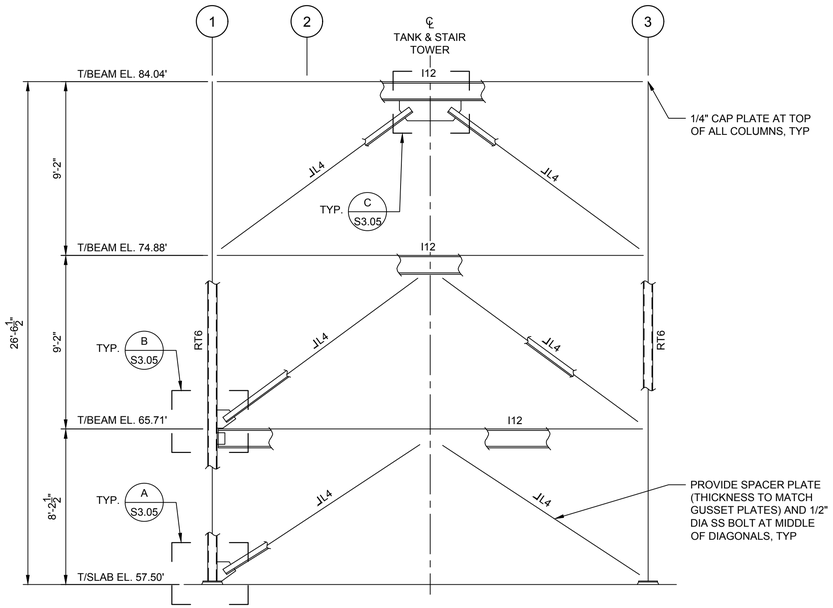

STAIR TOWER - WEST
FRAMING ELEVATION
1/4"=1'-0"

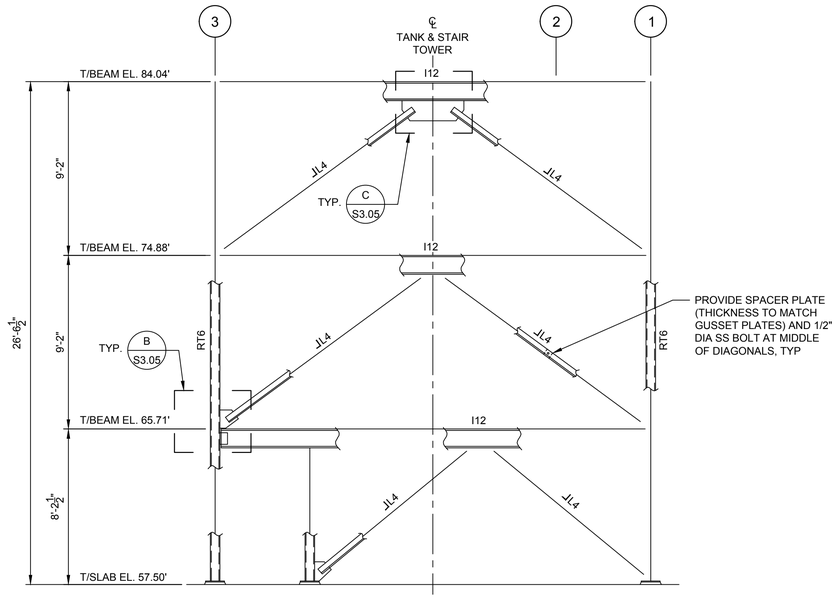

STAIR TOWER - EAST
FRAMING ELEVATION
1/4"=1'-0"

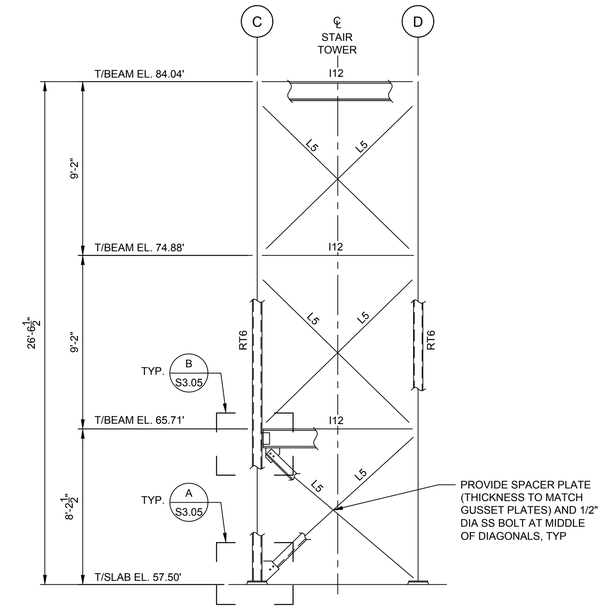

STAIR TOWER - NORTH (SOUTH SIMILAR)
FRAMING ELEVATION
1/4"=1'-0"

SHAPE LEGEND: ALUMINUM

- I12: I12x11.7
- RT6: 6x6X3/8
- JL4: JL4x4x1/4
- L5: L5x5x3/8

NOTES:
1. ALL STAIR TOWER FRAMING SHOWN TO BE ALUMINUM PER SPECIFICATIONS.

BID DOCUMENTS

IF THIS BAR DOES NOT MEASURE 1" THEN DRAWING HAS BEEN REDUCED SCALE ACCORDINGLY

WEKIVA ENGINEERING
711 N ORANGE AVE, SUITE A
WINTER PARK, FL 32789
P: 321.972.4989 CA Lic. No: 31920
WEKIVA PROJECT #16-120

King ENGINEERING ASSOCIATES, INC.
4921 Memorial Highway
One Memorial Center, Suite 300
Tampa, Florida 33634
Phone 813 880-8881
Fax 813 880-8882
www.kingengineering.com
Engineering License #2610

© COPYRIGHT 2019 KING ENGINEERING ASSOCIATES, INC. DRAWINGS AND CONCEPTS MAY NOT BE USED OR REPRODUCED WITHOUT WRITTEN PERMISSION. CONSULTANTS HEREIN GRANTED SPECIFICALLY TO ENGINEERING AGENCIES TO REPRODUCE THIS DOCUMENT IN COMPLIANCE WITH F.S. CHAPTER 119.

RECORD DRAWINGS
SURVEYED BY: DRAWN BY:
REVIEWED BY: PROJECT ENGINEER DATE
APPROVED BY: ENGINEER DATE

REVISION	BY	DATE

CITY OF CLEARWATER, FLORIDA
ENGINEERING DEPARTMENT
100 S. MYRTLE AVE.
CLEARWATER, FL 33756

CALL 811 SUNSHINE STATE ONE CALL OF FLORIDA www.callsunshine.com (800) 432-4770 BEFORE YOU EXCAVATE

NORTHEAST WRF GRIT REMOVAL, SALSNES FILTER AND EQUALIZATION SYSTEM IMPROVEMENTS

STAIR TOWER FRAMING ELEVATIONS

DWG NAME: –	FIELD BOOK: –	SURVEYED BY: –	SCALE: VERT. AS SHOWN
CONTRACT NO.: 15-0045-UT	DATE DRAWN: FEBRUARY 2019	DRAWN BY: JVS	HORIZ. AS SHOWN
JOB NO.: 2110-210-002	DESIGNED BY: JVS	CHECKED BY: DSM	SHEET NO.: ## OF 117

APPROVED FOR CONSTRUCTION

O:\ENV_ENG\2110\210\002\production\Drawings\S3.00-3.02 2019-03-25.dwg, March 18, 2020 2:37 PM, King Engineering Associate Inc.

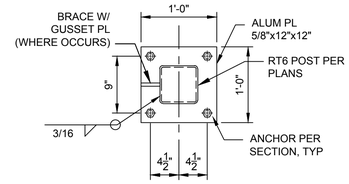

PLAN

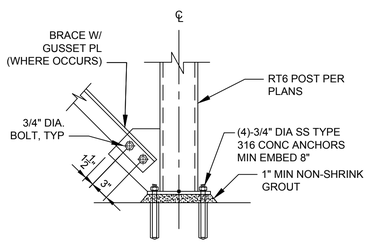

SECTION

COLUMN BASE CONNECTION

DETAIL A
1"=1'-0" S3.04

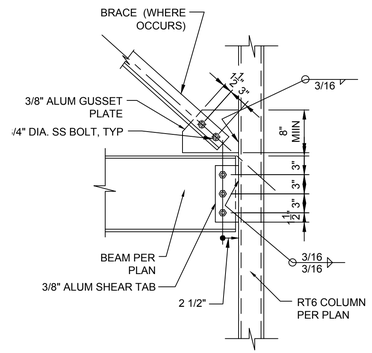

BEAM TO COLUMN CONNECTION AT RT6

DETAIL B
1"=1'-0" S3.04

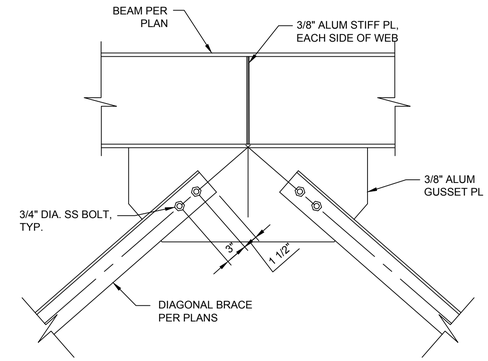

BEAM TO BRACING CONNECTION

DETAIL C
1"=1'-0" S3.04

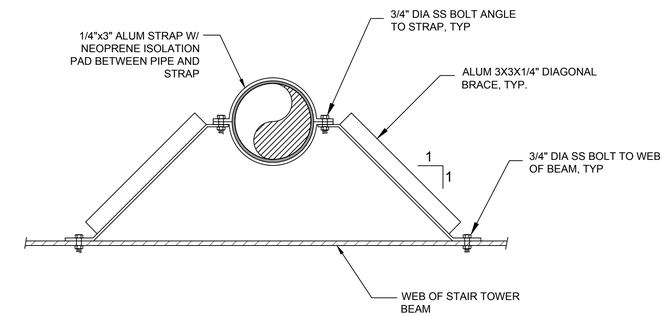

PIPE SUPPORT AT STAIR TOWER BEAM WEB

DETAIL D
1"=1'-0" S3.02

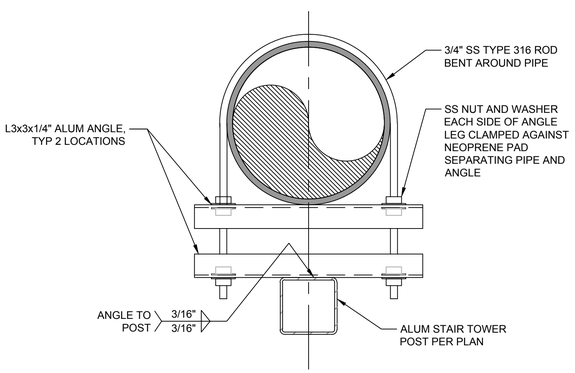

PIPE SUPPORT AT STAIR TOWER POST

DETAIL E
1"=1'-0" S3.02

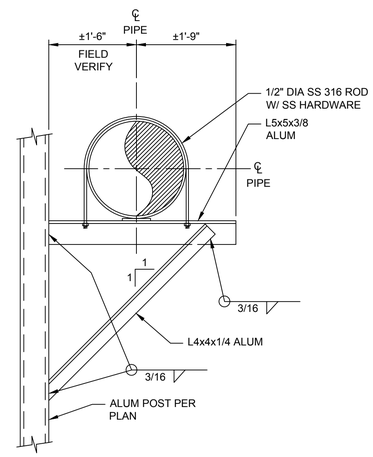

PIPE SUPPORT AT STAIR TOWER POST

DETAIL F
1"=1'-0" S3.02

BID DOCUMENTS

IF THIS BAR DOES NOT MEASURE 1" THEN DRAWING HAS BEEN REDUCED SCALE ACCORDINGLY 0 1"

WEKIVA ENGINEERING
711 N ORANGE AVE, SUITE A
WINTER PARK, FL 32789
P: 321.972.4989 CA Lic. No: 31920
WEKIVA PROJECT #16-120

King ENGINEERING ASSOCIATES, INC.
4921 Memorial Highway
One Memorial Center, Suite 300
Tampa, Florida 33634
Phone 813 880-8881
Fax 813 880-8882
www.kingengineering.com
Engineering License #2610

RECORD DRAWINGS
SURVEYED BY: DRAWN BY:
REVIEWED BY: PROJECT ENGINEER DATE
APPROVED BY: ENGINEER DATE

REVISION	BY	DATE

CITY OF CLEARWATER, FLORIDA
ENGINEERING DEPARTMENT
100 S. MYRTLE AVE.
CLEARWATER, FL 33756

CALL 811
SUNSHINE STATE ONE CALL OF FLORIDA
www.callsunshine.com
(800) 432-4770
BEFORE YOU EXCAVATE

NORTHEAST WRF GRIT REMOVAL, SALSNES FILTER AND EQUALIZATION SYSTEM IMPROVEMENTS

STAIR TOWER AND PIPE SUPPORT DETAILS

DWG NAME: –	FIELD BOOK: –	SURVEYED BY: –	SCALE: VERT. AS SHOWN
CONTRACT NO.: 15-0045-UT	DATE DRAWN: FEBRUARY 2019	DRAWN BY: JVS	HORIZ. AS SHOWN
JOB NO.: 2110-210-002	DESIGNED BY: JVS	CHECKED BY: DSM	SHEET NO.: ## OF 117

APPROVED FOR CONSTRUCTION

© COPYRIGHT 2019 KING ENGINEERING ASSOCIATES, INC. DRAWINGS AND CONCEPTS MAY NOT BE USED OR REPRODUCED WITHOUT WRITTEN PERMISSION. CONSULTANTS WHO HAVE BEEN GRANTED PERMISSION TO REPRODUCE THIS DOCUMENT IN COMPLIANCE WITH F.S. CHAPTER 119.

O:\ENV_ENG\2110\210\002\production\Drawings\S3.00-3.02 2019-03-25.dwg, March 18, 2020 2:37 PM, King Engineering Associate Inc.

REBAR MINIMUM TENSION DEVELOPMENT & LAP LENGTHS

CONCRETE STRENGTH f'c= 4,000 PSI OR GREATER

BAR SIZE	DEVELOPMENT LENGTH, ld		LAP LENGTH (CLASS B SPLICE)		BAR SIZE
	TOP BARS	OTHER BARS	TOP BARS	OTHER BARS	
#3	1'-7"	1'-3"	2'-0"	1'-7"	#3
#4	2'-1"	1'-7"	2'-8"	2'-0"	#4
#5	2'-7"	2'-0"	3'-4"	2'-7"	#5
#6	3'-1"	2'-4"	4'-0"	3'-1"	#6
#7	4'-6"	3'-6"	5'-10"	4'-6"	#7
#8	5'-2"	3'-11"	6'-8"	5'-2"	#8
#9	5'-10"	4'-6"	7'-6"	5'-10"	#9
#10	6'-6"	5'-0"	8'-6"	6'-6"	#10
#11	7'-3"	5'-7"	9'-6"	7'-3"	#11

NOTES:
1. GRADE 60 UNCOATED REINFORCEMENT
2. SPLICE LENGTHS GIVEN ABOVE ARE TO BE USED UNLESS NOTED OTHERWISE ON DESIGN DRAWINGS.

MAXIMUM BAR SPACING AT NON-CONTACT LAPS:

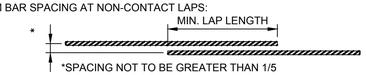

*SPACING NOT TO BE GREATER THAN 1/5 LAP LENGTH OR 6IN. WHICH EVER IS LESS

STANDARD HOOK DEVELOPMENT LENGTH

BAR SIZE	90° STD HOOK "A"	180° STD HOOK "J"	DEVELOPMENT LENGTH, ldh
#3	6"	3"	6"
#4	8"	4"	7"
#5	10"	5"	9"
#6	1'-0"	6"	10"
#7	1'-2"	7"	1'-0"
#8	1'-4"	8"	1'-2"
#9	1'-7"	11 3/4"	1'-3"
#10	1'-10"	1'-1 1/2"	1'-5"
#11	2'-0"	1'-2 3/4"	1'-7"

*FOR STD HOOK BAR GEOMETRY NOT SHOWN REFER TO MINIMUM ACI REQUIREMENTS

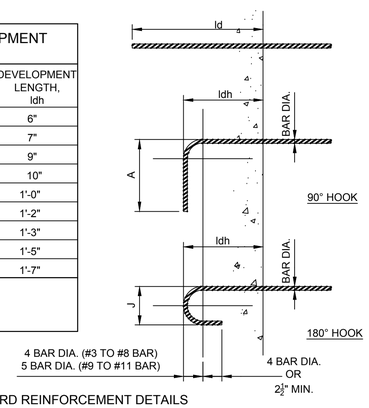

STANDARD REINFORCEMENT DETAILS

DETAIL A
NTS

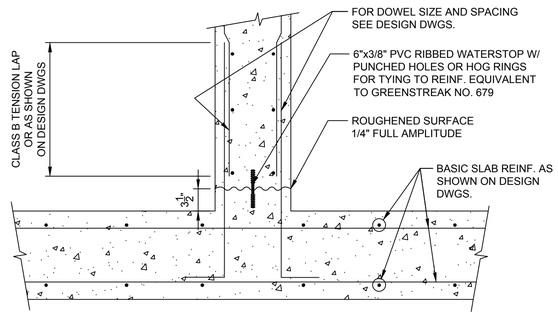

WALL BASE CONSTRUCTION JOINT

DETAIL B
NTS

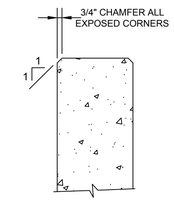

CHAMFER

DETAIL C
NTS

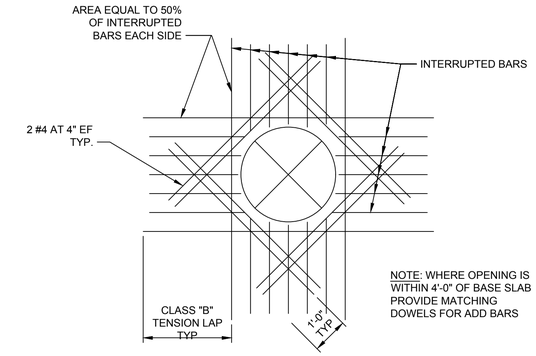

REINF AT CIRCULAR OPENINGS GREATER THAN 12"

DETAIL D
NTS

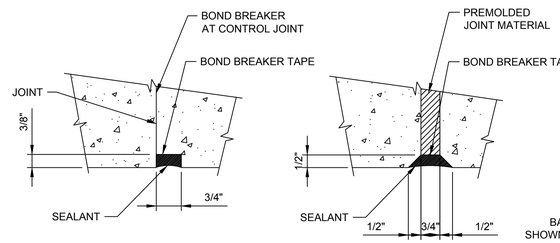

CONTORL JOINT SEALANT

CHAMFERED JOINT SEALANT

JOINT SEALANTS

DETAIL E
NTS

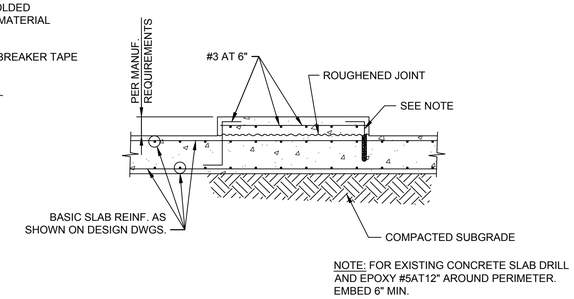

NOTE: FOR EXISTING CONCRETE SLAB DRILL AND EPOXY #5AT12" AROUND PERIMETER. EMBED 6" MIN.

EQUIPMENT PAD

DETAIL F
NTS

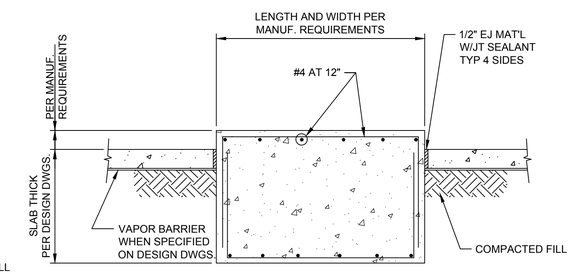

ISOLATED EQUIPMENT PAD

DETAIL G
NTS

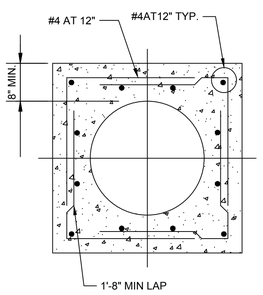

PIPE ENCASEMENT

DETAIL H
NTS

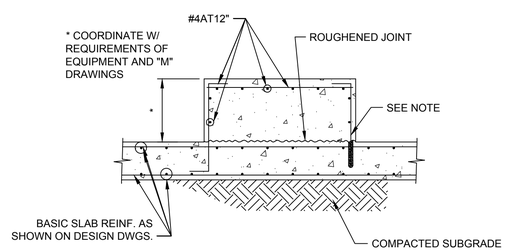

NOTE: FOR EXISTING CONCRETE SLAB DRILL AND EPOXY #5AT12" AROUND PERIMETER. EMBED 6" MIN.

EQUIPMENT PEDESTAL

DETAIL I
NTS

BID DOCUMENTS

IF THIS BAR DOES NOT MEASURE 1" THEN DRAWING HAS BEEN REDUCED SCALE ACCORDINGLY

WEKIVA ENGINEERING
711 N ORANGE AVE, SUITE A
WINTER PARK, FL 32789
P: 321.972.4989 CA Lic. No: 31920
WEKIVA PROJECT #16-120

King ENGINEERING ASSOCIATES, INC.
4921 Memorial Highway
One Memorial Center, Suite 300
Tampa, Florida 33634
Phone 813 880-8881
Fax 813 880-8882
www.kingengineering.com
Engineering License #2610

RECORD DRAWINGS
SURVEYED BY: DRAWN BY:
REVIEWED BY: PROJECT ENGINEER DATE
APPROVED BY: ENGINEER DATE

REVISION	BY	DATE

CITY OF CLEARWATER, FLORIDA
ENGINEERING DEPARTMENT
100 S. MYRTLE AVE.
CLEARWATER, FL 33756

CALL 811 SUNSHINE STATE ONE CALL OF FLORIDA www.callsunshine.com (800) 432-4770 NOT LATER THAN 48 HOURS BEFORE YOU EXCAVATE

NORTHEAST WRF GRIT REMOVAL, SALSNES FILTER AND EQUALIZATION SYSTEM IMPROVEMENTS

STANDARD DETAILS 1 OF 2

DWG NAME: –	FIELD BOOK: –	SURVEYED BY: –	SCALE: VERT. AS SHOWN
CONTRACT NO.: 15-0045-UT	DATE DRAWN: FEBRUARY 2019	DRAWN BY: JVS	HORIZ. AS SHOWN
JOB NO.: 2110-210-002	DESIGNED BY: JVS	CHECKED BY: DSM	SHEET NO.: ## OF 117

APPROVED FOR CONSTRUCTION

© COPYRIGHT 2019 KING ENGINEERING ASSOCIATES, INC. DRAWINGS AND CONCEPTS MAY NOT BE USED OR REPRODUCED WITHOUT WRITTEN PERMISSION. CONSULTANT HEREBY GRANTS PERMISSION TO GOVERNMENTAL AGENCIES TO REPRODUCE THIS DOCUMENT IN COMPLIANCE WITH F.S. CHAPTER 119.

O:\ENV_ENG\2110\210\002\production\Drawings\S5.01-5.02 2019-03-25 .dwg, March 18, 2020 2:37 PM, King Engineering Associate Inc.

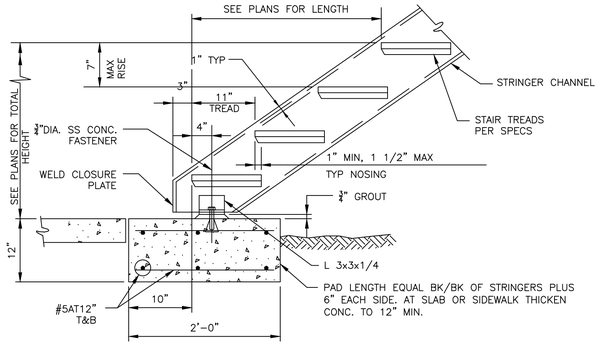

ALUM STAIR STRINGER TO CONCRETE

DETAIL A
NTS

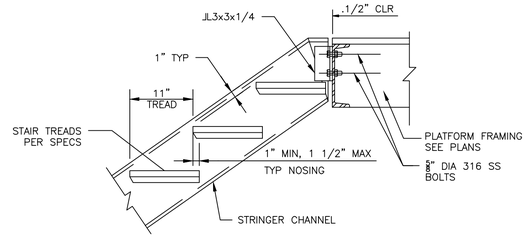

ALUM STAIR STRINGER TO CONCRETE PLATFORM TOP

DETAIL B
NTS

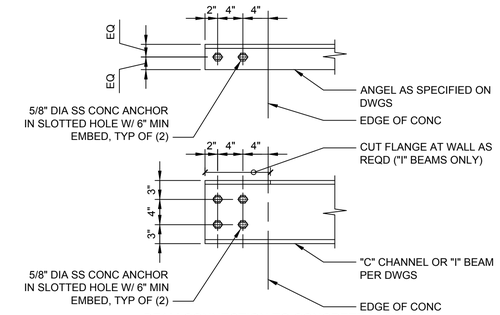

BEAM CONNECTION TO CONCRETE FACE

DETAIL C
NTS

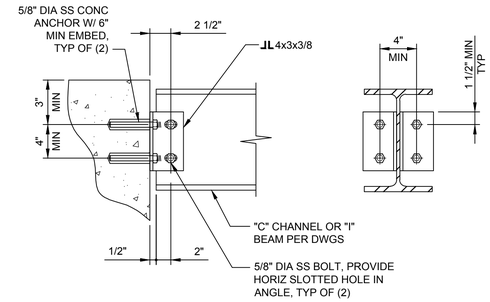

TYPICAL FRAMING CONNECTION TO CONCRETE

DETAIL D
NTS

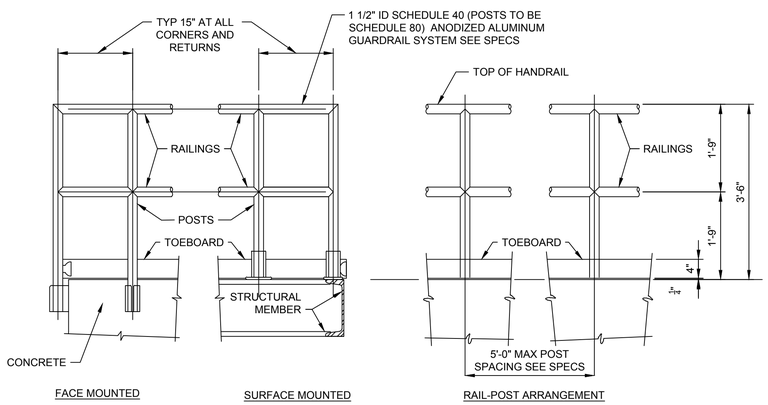

GUARDRAILS

DETAIL E
NTS

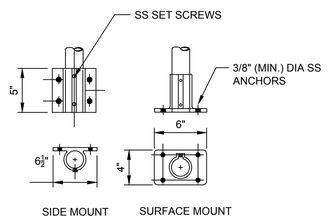

CONNECTIONS

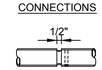

LOCATED AT 30'-0" MAX INTERVALS

EXPANSION JT

BASE CONNECTION NOTE:
4 ANCHOR PATTERN SHOWN, 2 BOLT PATTERN WILL BE ACCEPTABLE GIVEN THE LOADING REQUIREMENTS SPECIFIED ARE SATISFIED AND A MINIMUM OF 1/2" DIA. SS BOLTS ARE PROVIDED.

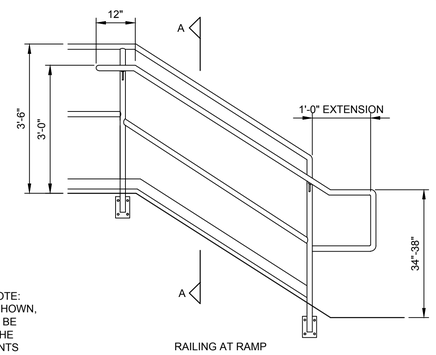

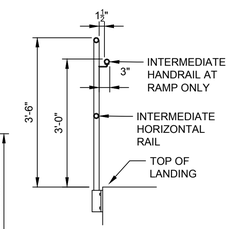

HANDRAIL ATTACHED TO GUARDRAIL SYSTEM

DETAIL F
NTS

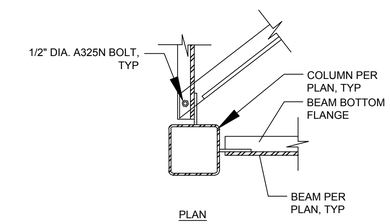

TYPICAL FRAMING CONNECTION TO CONCRETE

DETAIL G
NTS

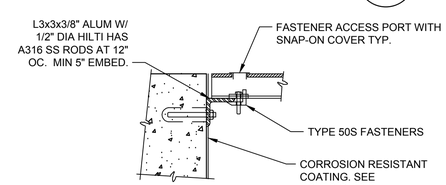

MAXIMUM SPAN	DEPTH	TYPE	STYLE
5'-0"	1 1/2"	HD	P
6'-0"	1 3/4"	HD	P
7'-0"	2"	HD	P
7'-6"	2 1/4"	HD	P
8'-0"	2 1/2"	HD	P

CONNECT INDIVIDUAL 6" WIDE PIECES TO ACHIEVE 4'-0" WIDE SECTIONS. PROVIDE 4 TYPE 50 FASTENERS PER EACH 4'-0" SECTION.

ALUM PLANK GRATING AND GRATING SUPPORT

DETAIL I
NTS

NOTES:

1. ALUMINUM EMBEDDED IN CONCRETE MUST BE PAINTED WITH ONE SHOP COAT OF HEAVY BITUMASTIC.
2. ALUMINUM SHAPES IN CONTACT WITH CONCRETE MUST BE SEPARATED BY 1/32" NEOPRENE GASKET OR ANY CASE WHERE TWO DIFFERENT METALS ARE TO BE IN CONTACT. A NEOPRENE GASKET MUST BE PROVIDED.
3. HANDRAILS, GUARDRAILS, POST, BRACKETS AND MOUNTINGS SHALL MEET THE FLORIDA BUILDING CODE (FBC) OR INTERNATIONAL BUILDING CODE (IBC) AND OCCUPATIONAL SAFETY AND HEALTH ADMINISTRATIONS (OSHA) LOADING REQUIREMENTS.
4. TOP OF ALL GUARDRAILS SHOULD BE 42" HIGH ABOVE THE FINISH FLOOR OR WALKWAY, THE INTERMEDIATE RAILS SHALL BE EQUALLY SPACED BETWEEN THE TOP RAIL AND THE TOEBOARD.
5. ALL WALKWAYS SHALL USE GRATING UNLESS OTHERWISE SHOWN ELSEWHERE ON THE DRAWINGS. GRATING SHALL BE PLACED SUCH THAT OPENINGS AROUND GATES AND OTHER EQUIPMENT IS 2" MINIMUM.
6. HANDRAIL AT GATE LOCATIONS SHALL NOT BE INTERRUPTED AND SHALL BE SPECIFICALLY ADDRESSED IN SHOP DRAWING SUBMITTALS.

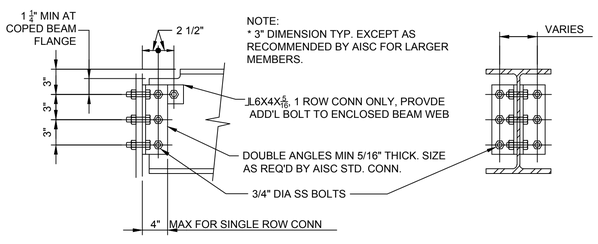

NOTE:
* 3" DIMENSION TYP. EXCEPT AS RECOMMENDED BY AISC FOR LARGER MEMBERS.

NOMINAL BEAM DEPTH, INCHES	ROWS OF BOLTS	LENGTH (3) OF ANGLE
12-15	3	8 1/2"
8-10	2	5 1/2"
6	1	3"

NOTES:

1. NUMBER OF ROWS IS EQUAL TO NUMBER OF BOLTS TO ENCLOSE WEB.
2. ALL FRAMING CONNECTIONS SHALL CONFORM TO SCHEDULE UNLESS DETAILED OTHERWISE ON FRAMING DRAWINGS.
3. ADD 1 1/2" TO ANGLE LENGTH FOR STAGGERED BOLT CONNECTIONS.
4. USE SS BOLTS FOR ALL ALUMINUM FRAMING.
5. USE WASHERS ON NUTS.

TYPICAL FRAMING CONNECTION

DETAIL H
NTS

BID DOCUMENTS

IF THIS BAR DOES NOT MEASURE 1" THEN DRAWING HAS BEEN REDUCED SCALE ACCORDINGLY
0 1"

WEKIVA ENGINEERING
711 N ORANGE AVE, SUITE A
WINTER PARK, FL 32789
P: 321.972.4989 CA Lic. No: 31920
WEKIVA PROJECT #16-120

King ENGINEERING ASSOCIATES, INC.
4921 Memorial Highway
One Memorial Center, Suite 300
Tampa, Florida 33634
Phone 813 880-8881
Fax 813 880-8882
www.kingengineering.com
Engineering License #2610

© COPYRIGHT 2019 KING ENGINEERING ASSOCIATES, INC. DRAWINGS AND CONCEPTS MAY NOT BE USED OR REPRODUCED WITHOUT WRITTEN PERMISSION. CONSULTANT HEREBY GRANTS PERMISSION TO GOVERNMENTAL AGENCIES TO REPRODUCE THIS DOCUMENT IN COMPLIANCE WITH F.S. CHAPTER 119.

RECORD DRAWINGS
SURVEYED BY: DRAWN BY:
REVIEWED BY: PROJECT ENGINEER DATE
APPROVED BY: ENGINEER DATE

REVISION	BY	DATE

CITY OF CLEARWATER, FLORIDA
ENGINEERING DEPARTMENT
100 S. MYRTLE AVE.
CLEARWATER, FL 33756

CALL 811 SUNSHINE STATE ONE CALL OF FLORIDA www.callsunshine.com (800) 432-4770 MIN. 48 HOURS BEFORE YOU EXCAVATE

NORTHEAST WRF GRIT REMOVAL, SALSNES FILTER AND EQUALIZATION SYSTEM IMPROVEMENTS

STANDARD DETAILS 2 OF 2

DWG NAME: –	FIELD BOOK: –	SURVEYED BY: –	SCALE: VERT. AS SHOWN
CONTRACT NO.: 15-0045-UT	DATE DRAWN: FEBRUARY 2019	DRAWN BY: JVS	HORIZ. AS SHOWN
JOB NO.: 2110-210-002	DESIGNED BY: JVS	CHECKED BY: DSM	SHEET NO.: ## OF 117
APPROVED FOR CONSTRUCTION			

O:\ENV_ENG\2110\210\002\production\Drawings\S5.01-5.02 2019-03-25 .dwg, March 18, 2020 2:37 PM, King Engineering Associate Inc.

M1.01

EX. 6" PRIMARY SLUDGE TO BE REMOVED

REMOVE EX. PIPE, EX. WALL CASTING TO REMAIN. PLUG REMAINING HOLE WITH GROUT.

EX. SUMP PUMP DISCHARGE PIPE TO BE REMOVED

EX. 6" DIP SLUDGE RECYCLE TO BE REMOVED

REMOVE EX. PICKET THICKENER, WALKWAY BRIDGE AND ROTATING COMPONENTS (TYP. 4)

EX. 6" PRIMARY SLUDGE TO BE REMOVED

EX. 6" PRIMARY SLUDGE TO BE REMOVED SEE IMAGES #5 & 6, SHT. M1.06

GROUT FILL OPENING

REMOVE EX. 6" PSL CUT FLUSH WITH WALL

EX. GRIT CYCLONES SEE IMAGES #5 & 6, SHT. M1.06

EXISTING WEMCO HYDROGRITTERS

OPENING IN FLOOR

EXIST. 9" CONC. SLAB

16'-6" N.T.S.

63'-0"

INFLUENT WELL

THICKENER No. 1

THICKENER No. 2

15'-0" DIA.

EX. 6" PVC BYPASS TO BE REMOVED

REMOVE EX. PIPE AND PLUG HOLE WITH GROUT

CONTRACTOR TO REMOVE EX. PIPING AND SUPPORTS AS DIRECTED

EX. 6" PVC PIPE, FITTINGS AND VALVES TO BE REMOVED

REMOVE EX. 6" SLUICE GATE, WALL PIPE AND 45° BEND (TYP. 4)

REMOVE EX. CONC. (TYP. 4)

EX. 6" PVC TO BE REMOVED (TYP. 4)

PLUG EX. WALL SLEEVES

REMOVE EX. PICKET THICKENER, WALKWAY BRIDGE AND ROTATING COMPONENTS SEE IMAGE #4, SHT. M1.06

EX. 6" DIP SLUDGE RECYCLE TO BE REMOVED

EXIST. 9" CONC. SLAB

℄ 6" WALL SLEEVES EL. 69.50

℄ 6" WALL SLEEVE EL. 58.75

℄ 6" WALL SLEEVE EL. 62.50

℄ 4" WALL SLEEVE EL. 70.08

℄ 4" WALL SLEEVE EL. 57.83

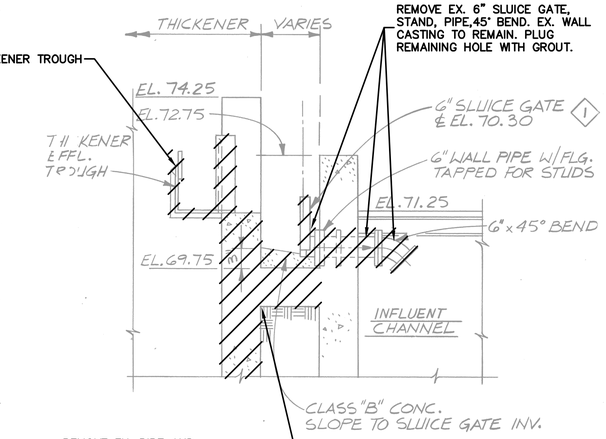

SECTION J

SCALE: NTS

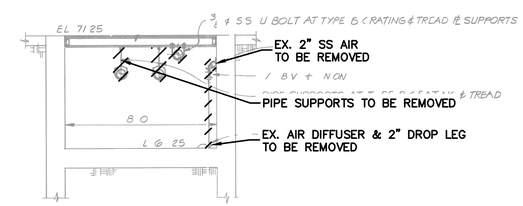

SECTION E

SCALE: NTS

EXISTING NORTHEAST PLANT BACKGROUND INFORMATION BASED ON BRILEY, WILD & ASSOCIATES RECORD DRAWINGS.

LEGEND:

= TO BE REMOVED

BID DOCUMENTS

King ENGINEERING ASSOCIATES, INC.
4921 Memorial Highway
One Memorial Center, Suite 300
Tampa, Florida 33634
Phone 813 880-8881
Fax 813 880-8882
www.kingengineering.com
Engineering License #2610

IF THIS BAR DOES NOT MEASURE 1" THEN DRAWING HAS BEEN REDUCED SCALE ACCORDINGLY

RECORD DRAWINGS

SURVEYED BY: DRAWN BY:

REVIEWED BY: PROJECT ENGINEER DATE

APPROVED BY: ENGINEER DATE

REVISION	BY	DATE

CITY OF CLEARWATER, FLORIDA
ENGINEERING DEPARTMENT
100 S. MYRTLE AVE.
CLEARWATER, FL 33756

INVESTIGATE BEFORE YOU EXCAVATE
CALL 811
SUNSHINE STATE ONE CALL OF FLORIDA
www.callsunshine.com
(800) 432-4770
MIN. 48 HOURS BEFORE YOU EXCAVATE

NORTHEAST WRF GRIT REMOVAL, MOVING BELT FILTER AND EQUALIZATION SYSTEM IMPROVEMENTS

INFLUENT STRUCTURE UPPER LEVEL DEMO PLAN

DWG NAME: M1.01 – M1.06 AND M3.01 – M3.03	FIELD BOOK:	SURVEYED BY:	SCALE: VERT. N/A
CONTRACT NO.: 15-0045-UT	DATE DRAWN: MARCH 2016	DRAWN BY: MJG	HORIZ. AS SHOWN
JOB NO.: 2110-210-002	DESIGNED BY: LVM	CHECKED BY: TAT	SHEET NO.: 48 of 117

APPROVED FOR CONSTRUCTION

© COPYRIGHT 2010 KING ENGINEERING ASSOCIATES, INC. DRAWINGS AND CONCEPTS MAY NOT BE USED OR REPRODUCED WITHOUT WRITTEN PERMISSION. CONSENT IS HEREBY GRANTED SPECIFICALLY TO GOVERNMENTAL AGENCIES TO REPRODUCE THIS DOCUMENT IN COMPLIANCE WITH F.S. CHAPTER 119.

O:\ENV_ENG\2110\210\002\production\Drawings\M1.01 - M1.06 and M3.01 - M3.03.dwg, March 18, 2020 2:40 PM, King Engineering Associate Inc.

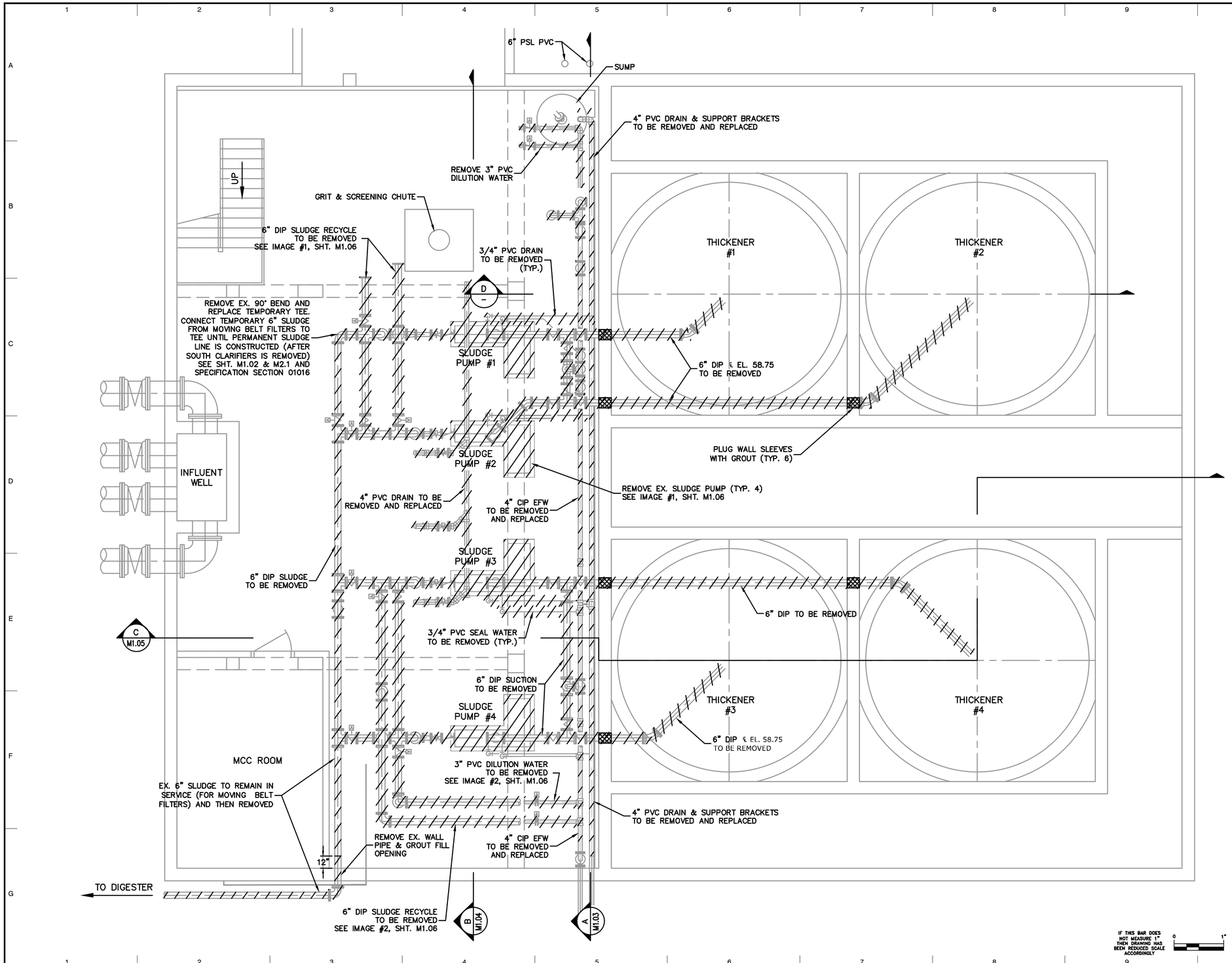

EXISTING NORTHEAST PLANT BACKGROUND INFORMATION BASED ON BRILEY, WILD & ASSOCIATES RECORD DRAWINGS.

LEGEND:

= TO BE REMOVED

SEE STRUCTURAL DRAWINGS FOR THE EXTENT OF CONCRETE REMOVAL

BID DOCUMENTS

IF THIS BAR DOES NOT MEASURE 1" THEN DRAWING HAS BEEN REDUCED SCALE ACCORDINGLY

0 1"

King
ENGINEERING ASSOCIATES, INC.
4921 Memorial Highway
One Memorial Center, Suite 300
Tampa, Florida 33634
Phone 813 880-8881
Fax 813 880-8882
www.kingengineering.com
Engineering License #2610

RECORD DRAWINGS

SURVEYED BY: DRAWN BY:
REVIEWED BY:
PROJECT ENGINEER DATE
APPROVED BY:
ENGINEER DATE

REVISION	BY	DATE

CITY OF CLEARWATER, FLORIDA
ENGINEERING DEPARTMENT
100 S. MYRTLE AVE.
CLEARWATER, FL 33756

CALL 811 SUNSHINE STATE ONE CALL OF FLORIDA www.call811.com (800) 432-4770 MIN. 48 HOURS BEFORE YOU EXCAVATE

NORTHEAST WRF GRIT REMOVAL, MOVING BELT FILTER AND EQUALIZATION SYSTEM IMPROVEMENTS

INFLUENT STRUCTURE LOWER LEVEL DEMO PLAN

DWG NAME: M1.01 – M1.06 AND M3.01 – M3.03	FIELD BOOK:	SURVEYED BY:	SCALE: VERT. N/A
CONTRACT NO.: 15-0045-UT	DATE DRAWN: MARCH 2016	DRAWN BY: MJG	HORIZ. AS SHOWN
JOB NO.: 2110-210-002	DESIGNED BY: LVM	CHECKED BY: TAT	SHEET NO.: 49 of 117
APPROVED FOR CONSTRUCTION			

© COPYRIGHT 2010 KING ENGINEERING ASSOCIATES, INC. DRAWINGS AND CONCEPTS MAY NOT BE USED OR REPRODUCED WITHOUT WRITTEN PERMISSION. CONSENT IS HEREBY GRANTED SPECIFICALLY TO GOVERNMENTAL AGENCIES TO REPRODUCE THIS DOCUMENT IN COMPLIANCE WITH F.S. CHAPTER 119.

O:\ENV_ENG\2110\210\002 Production\Drawings\M1.01 - M1.06 and M3.01 - M3.03.dwg, March 26, 2020 3:08 PM, King Engineering Associate Inc.

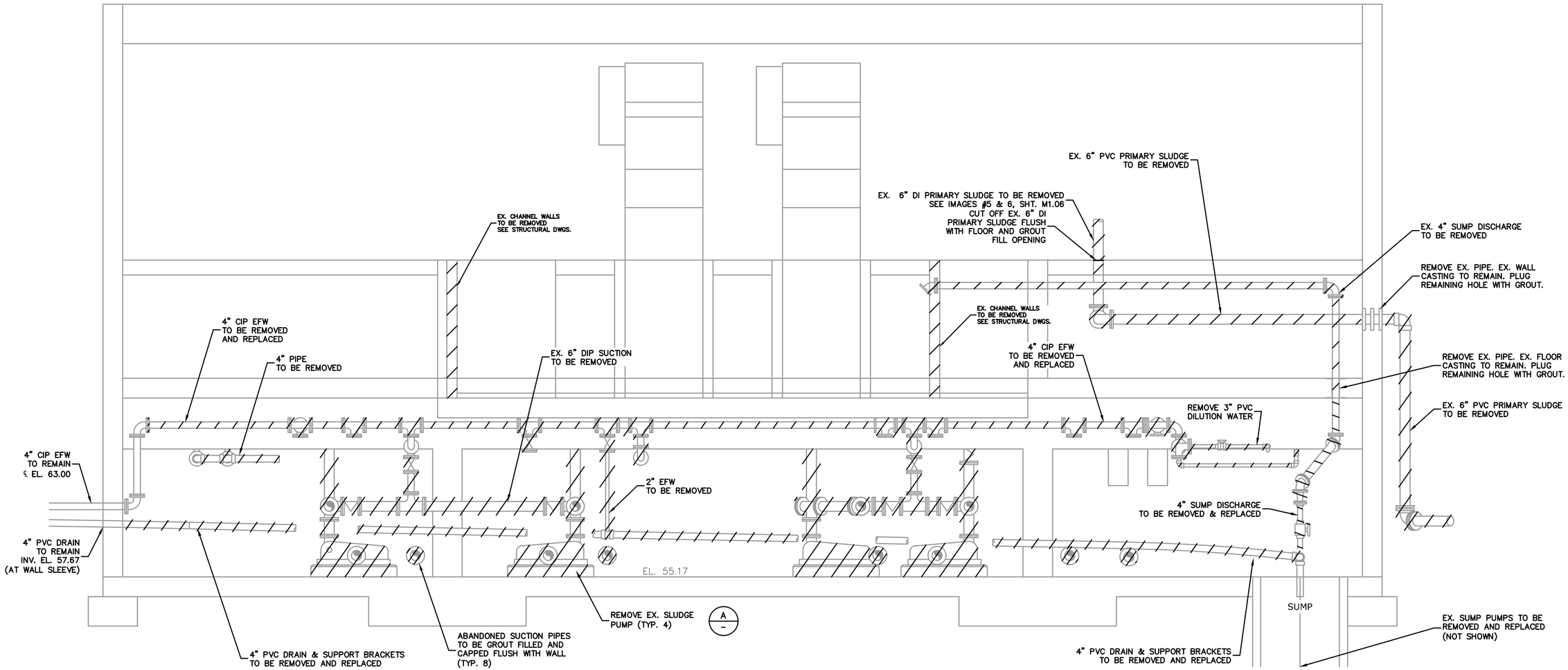

EXISTING NORTHEAST PLANT BACKGROUND INFORMATION BASED ON BRILEY, WILD & ASSOCIATES RECORD DRAWINGS.

LEGEND:

▨ = TO BE REMOVED

SECTION A/M1.01 A/M1.02

SCALE: NTS

IF THIS BAR DOES NOT MEASURE 1" THEN DRAWING HAS BEEN REDUCED SCALE ACCORDINGLY 0 1"

BID DOCUMENTS

King
ENGINEERING ASSOCIATES, INC.
4921 Memorial Highway
One Memorial Center, Suite 300
Tampa, Florida 33634
Phone 813 880-8881
Fax 813 880-8882
www.kingengineering.com
Engineering License #2610

RECORD DRAWINGS

SURVEYED BY: | DRAWN BY:

REVIEWED BY: PROJECT ENGINEER DATE

APPROVED BY: ENGINEER DATE

REVISION	BY	DATE

CITY OF CLEARWATER, FLORIDA
ENGINEERING DEPARTMENT
100 S. MYRTLE AVE.
CLEARWATER, FL 33756

INVESTIGATE BEFORE YOU EXCAVATE
CALL 811
SUNSHINE STATE ONE CALL OF FLORIDA
www.callsunshine.com
(800) 432-4770
MIN. 48 HOURS BEFORE YOU EXCAVATE

NORTHEAST WRF GRIT REMOVAL, MOVING BELT FILTER AND EQUALIZATION SYSTEM IMPROVEMENTS

INFLUENT STRUCTURE MECHANICAL DEMO PLAN SECTION - A

DWG NAME: M1.01 – M1.06 AND M3.01 – M3.03	FIELD BOOK:	SURVEYED BY:	SCALE: VERT. N/A
CONTRACT NO.: 15-0045-UT	DATE DRAWN: MARCH 2016	DRAWN BY: MJG	HORIZ. AS SHOWN
JOB NO.: 2110-210-002	DESIGNED BY: LVM	CHECKED BY: TAT	SHEET NO.: 50 of 117

APPROVED FOR CONSTRUCTION

© COPYRIGHT 2010 KING ENGINEERING ASSOCIATES, INC. DRAWINGS AND CONCEPTS MAY NOT BE USED OR REPRODUCED WITHOUT WRITTEN PERMISSION CONSENT IS HEREBY GRANTED SPECIFICALLY TO GOVERNMENTAL AGENCIES TO REPRODUCE THIS DOCUMENT IN COMPLIANCE WITH F.S. CHAPTER 119.

O:\ENV_ENG\2110\210\002\production\Drawings\M1.01 - M1.06 and M3.01 - M3.03.dwg, March 18, 2020 2:40 PM, King Engineering Associate Inc.

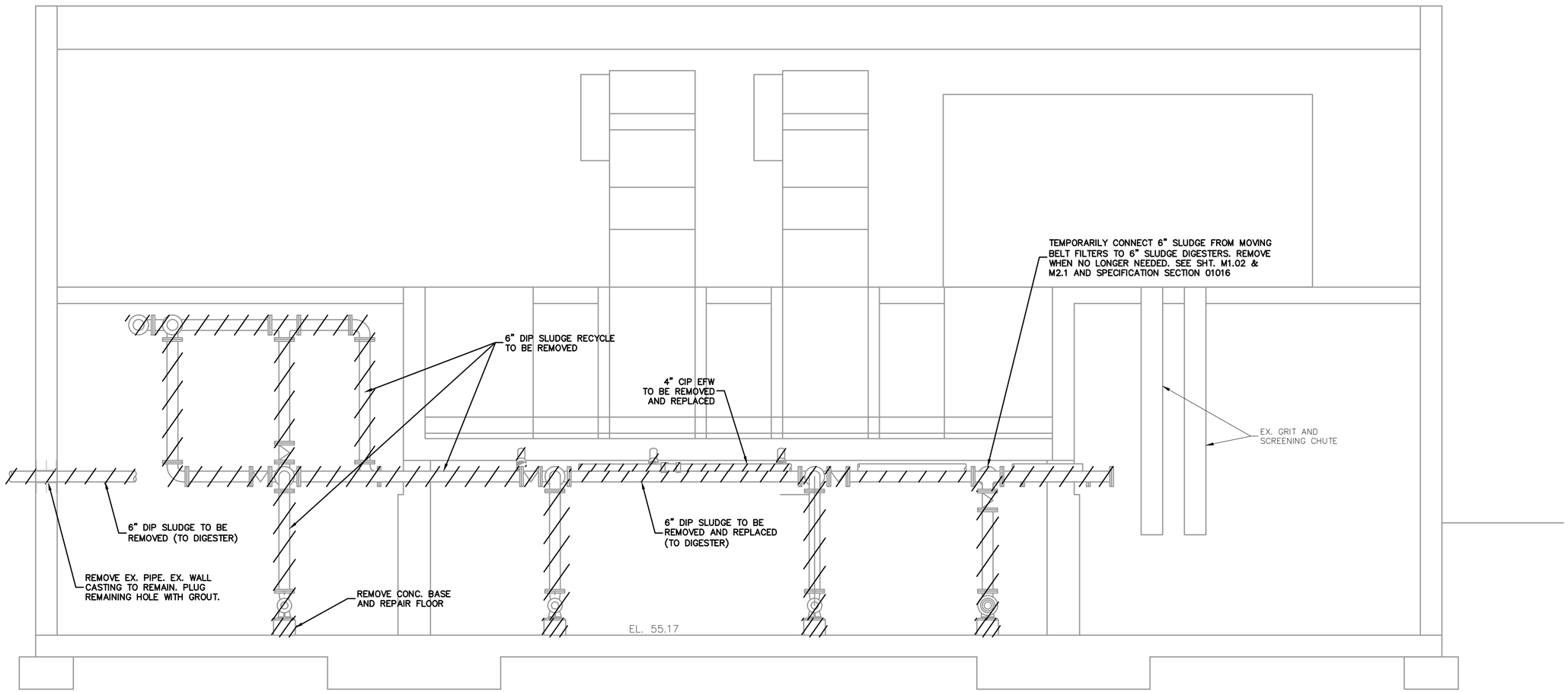

EXISTING NORTHEAST PLANT BACKGROUND INFORMATION BASED ON BRILEY, WILD & ASSOCIATES RECORD DRAWINGS.

LEGEND:

= TO BE REMOVED

SECTION B / M1.02
SCALE: NTS

BID DOCUMENTS

King
ENGINEERING ASSOCIATES, INC.
4921 Memorial Highway
One Memorial Center, Suite 300
Tampa, Florida 33634
Phone 813 880-8881
Fax 813 880-8882
www.kingengineering.com
Engineering License #2610

IF THIS BAR DOES NOT MEASURE 1" THEN DRAWING HAS BEEN REDUCED SCALE ACCORDINGLY 0 1"

RECORD DRAWINGS
SURVEYED BY: DRAWN BY:
REVIEWED BY: PROJECT ENGINEER DATE
APPROVED BY: ENGINEER DATE

REVISION	BY	DATE

CITY OF CLEARWATER, FLORIDA
ENGINEERING DEPARTMENT
100 S. MYRTLE AVE.
CLEARWATER, FL 33756

INVESTIGATE BEFORE YOU EXCAVATE
CALL 811
SUNSHINE STATE ONE CALL OF FLORIDA
www.callsunshine.com
(800) 432-4770
MIN. 48 HOURS BEFORE YOU EXCAVATE

NORTHEAST WRF GRIT REMOVAL, MOVING BELT FILTER AND EQUALIZATION SYSTEM IMPROVEMENTS

INFLUENT STRUCTURE MECHANICAL DEMO PLAN SECTION - B

DWG NAME: M1.01 – M1.06 AND M3.01 – M3.03	FIELD BOOK:	SURVEYED BY:	SCALE: VERT. N/A
CONTRACT NO.: 15-0045-UT	DATE DRAWN: MARCH 2016	DRAWN BY: MJG	HORIZ. AS SHOWN
JOB NO.: 2110-210-002	DESIGNED BY: LVM	CHECKED BY: TAT	SHEET NO.: 51 of 117

APPROVED FOR CONSTRUCTION

© COPYRIGHT 2010 KING ENGINEERING ASSOCIATES, INC. DRAWINGS AND CONCEPTS MAY NOT BE USED OR REPRODUCED WITHOUT WRITTEN PERMISSION CONSENT IS HEREBY GRANTED SPECIFICALLY TO GOVERNMENTAL AGENCIES TO REPRODUCE THIS DOCUMENT IN COMPLIANCE WITH F.S. CHAPTER 119.

O:\ENV_ENG\2110\210\002\production\Drawings\M1.01 - M1.06 and M3.01 - M3.03.dwg, March 18, 2020 2:40 PM, King Engineering Associate Inc.

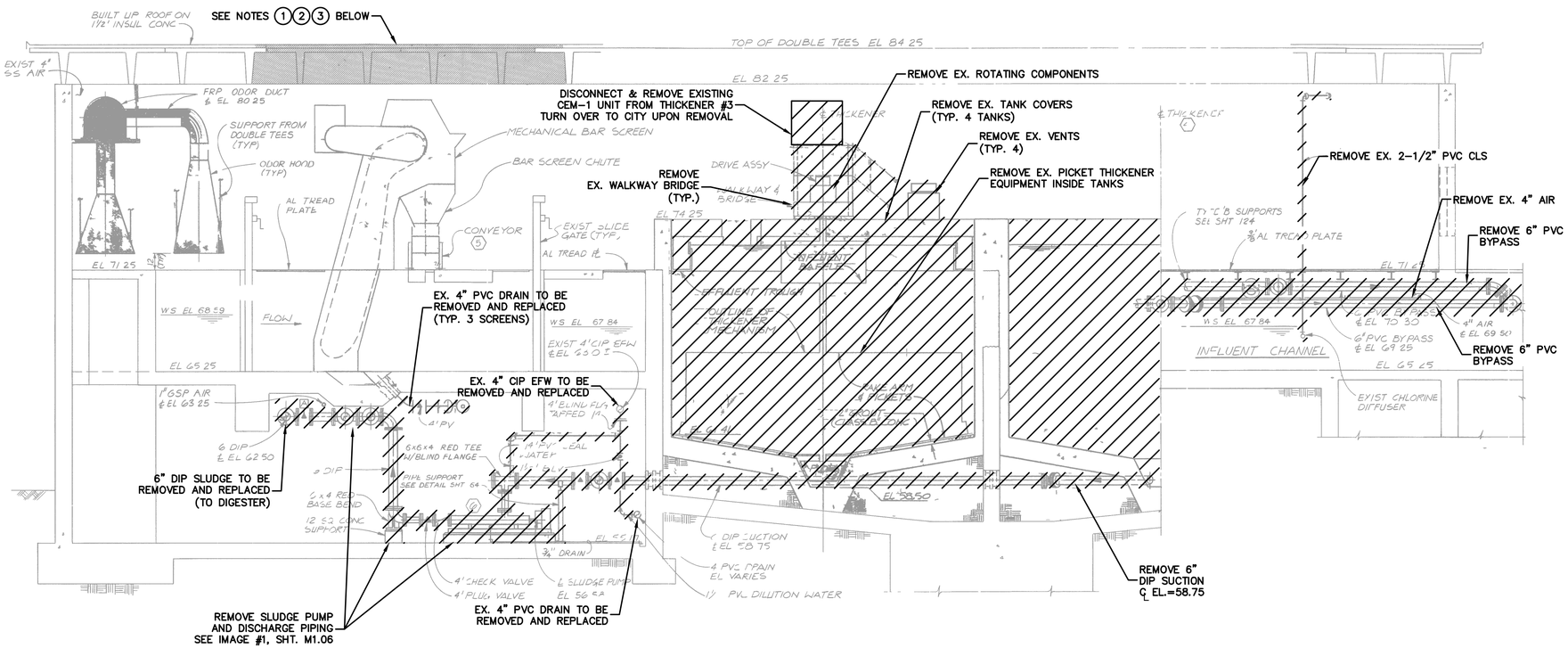

SECTION C/M1.01 C/M1.02

SCALE: NTS

ROOF NOTES:

1. EXISTING SHADED DOUBLE T ROOF SECTION HAS BEEN MODIFIED.
2. REFER TO JONES EDMUNDS DRAWINGS NE-S-02 THRU NE-S-06 FOR THOSE MODIFIED TRUSSES.
3. CONTRACTOR TO REMOVE THE SOUTHERNMOST REMOVABLE PANEL SHOWN ON THE EDMUNDS DRAWINGS & PLACE NEW HEAD CELL COMPONENTS INSIDE THE BUILDING THROUGH THE VOID. REINSTALL THE REMOVABLE PANEL & RESTORE THE OPENING TO A WATERTIGHT CONDITION.

EXISTING NORTHEAST PLANT BACKGROUND INFORMATION BASED ON BRILEY, WILD & ASSOCIATES RECORD DRAWINGS.

LEGEND:

▨ = TO BE REMOVED

BID DOCUMENTS

IF THIS BAR DOES NOT MEASURE 1" THEN DRAWING HAS BEEN REDUCED SCALE ACCORDINGLY 0 1"

King
ENGINEERING ASSOCIATES, INC.
4921 Memorial Highway
One Memorial Center, Suite 300
Tampa, Florida 33634
Phone 813 880-8881
Fax 813 880-8882
www.kingengineering.com
Engineering License #2610

RECORD DRAWINGS

SURVEYED BY: | DRAWN BY:
REVIEWED BY: PROJECT ENGINEER DATE
APPROVED BY: ENGINEER DATE

REVISION	BY	DATE

CITY OF CLEARWATER, FLORIDA
ENGINEERING DEPARTMENT
100 S. MYRTLE AVE.
CLEARWATER, FL 33756

INVESTIGATE BEFORE YOU EXCAVATE
CALL 811
SUNSHINE STATE ONE CALL OF FLORIDA
www.callsunshine.com
(800) 432-4770
MIN. 48 HOURS BEFORE YOU EXCAVATE

NORTHEAST WRF GRIT REMOVAL, MOVING BELT FILTER AND EQUALIZATION SYSTEM IMPROVEMENTS

INFLUENT STRUCTURE MECHANICAL DEMO PLAN SECTION - C

DWG NAME: M1.01 – M1.06 AND M3.01 – M3.03	FIELD BOOK:	SURVEYED BY:	SCALE: VERT. N/A
CONTRACT NO.: 15-0045-UT	DATE DRAWN: MARCH 2016	DRAWN BY: MJG	HORIZ. AS SHOWN
JOB NO.: 2110-210-002	DESIGNED BY: LVM	CHECKED BY: TAT	SHEET NO.: 52 of 117

APPROVED FOR CONSTRUCTION

© COPYRIGHT 2010 KING ENGINEERING ASSOCIATES, INC. DRAWINGS AND CONCEPTS MAY NOT BE USED OR REPRODUCED WITHOUT WRITTEN PERMISSION. CONSENT IS HEREBY GRANTED SPECIFICALLY TO GOVERNMENTAL AGENCIES TO REPRODUCE THIS DOCUMENT IN COMPLIANCE WITH F.S. CHAPTER 119.

O:\ENV_ENG\2110\210\002\production\Drawings\M1.01 - M1.06 and M3.01 - M3.03.dwg, March 18, 2020 2:40 PM, King Engineering Associate Inc.

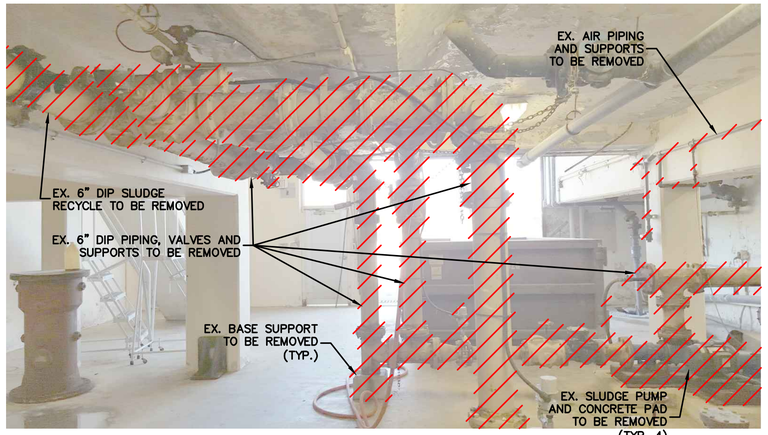

IMAGE #1 LOWER LEVEL / SLUDGE PUMPS / WEST

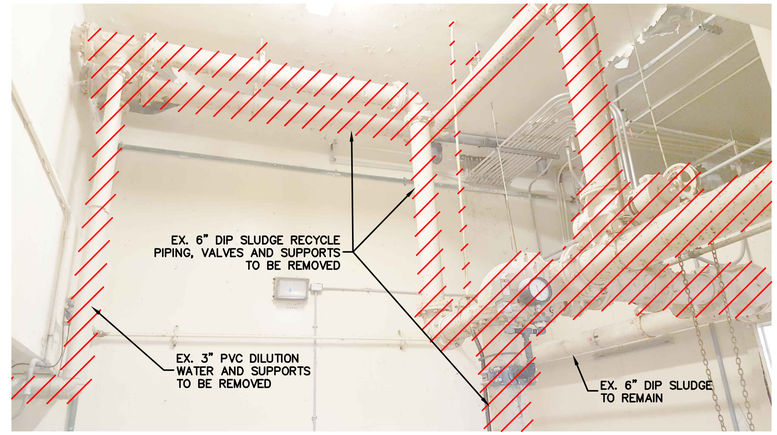

IMAGE #2 LOWER LEVEL / SLUDGE PIPING / SOUTH

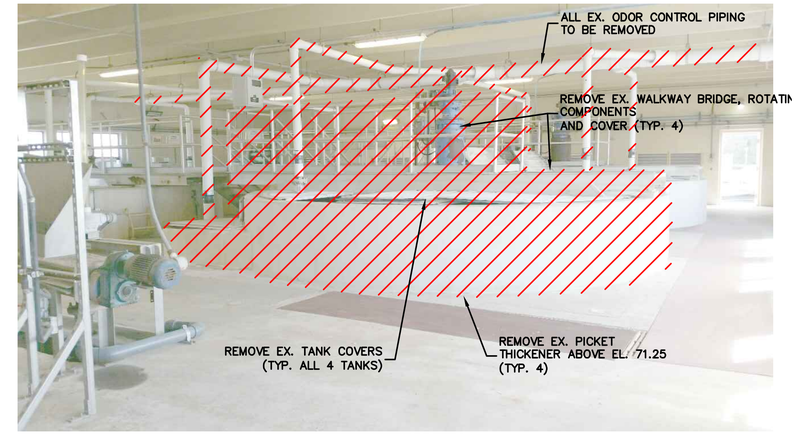

IMAGE #3 UPPER LEVEL / THICKENER / NORTHWEST

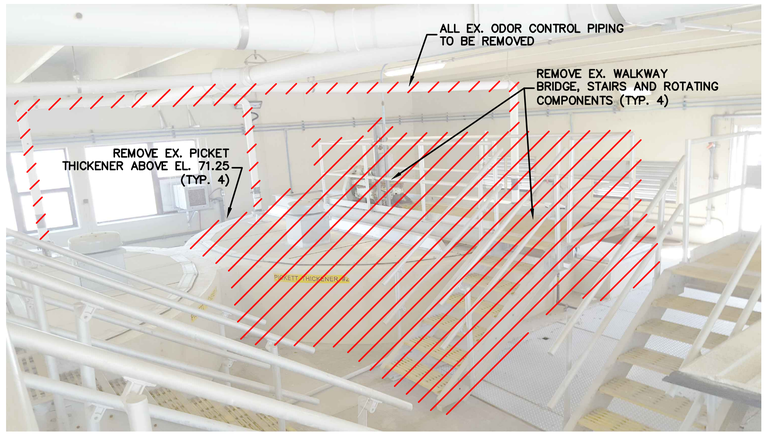

IMAGE #4 UPPER LEVEL / THICKENER / NORTHEAST

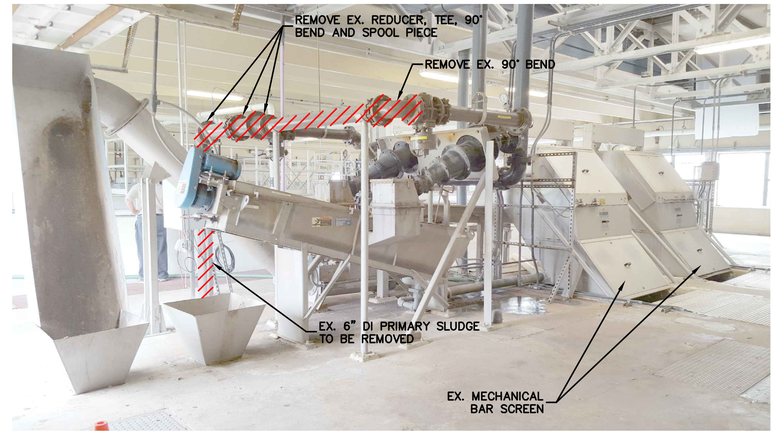

IMAGE #5 UPPER LEVEL / GRIT CYCLONE & CLASSIFIER / NORTHWEST

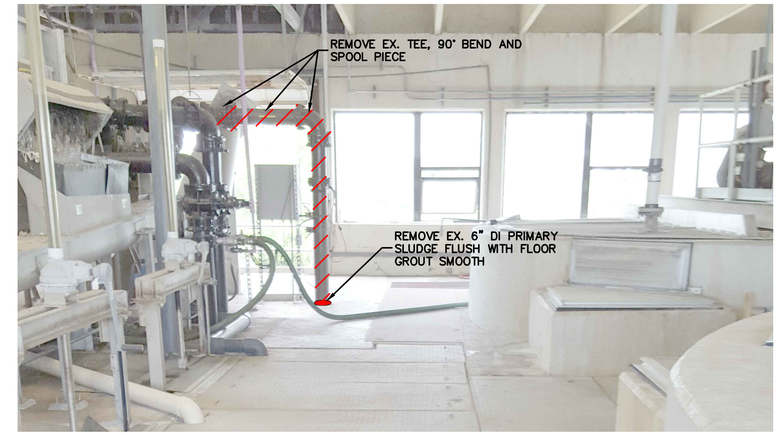

IMAGE #6 UPPER LEVEL / GRIT CYCLONE & CLASSIFIER / NORTH

LEGEND:

= TO BE REMOVED

IF THIS BAR DOES NOT MEASURE 1" THEN DRAWING HAS BEEN REDUCED SCALE ACCORDINGLY 0 1"

BID DOCUMENTS

King
ENGINEERING ASSOCIATES, INC.
4921 Memorial Highway
One Memorial Center, Suite 300
Tampa, Florida 33634
Phone 813 880-8881
Fax 813 880-8882
www.kingengineering.com
Engineering License #2610

RECORD DRAWINGS

SURVEYED BY: DRAWN BY:

REVIEWED BY: PROJECT ENGINEER DATE

APPROVED BY: ENGINEER DATE

REVISION	BY	DATE

CITY OF CLEARWATER, FLORIDA
ENGINEERING DEPARTMENT
100 S. MYRTLE AVE.
CLEARWATER, FL 33756

INVESTIGATE BEFORE YOU EXCAVATE
CALL 811
SUNSHINE STATE ONE CALL OF FLORIDA
www.callsunshine.com
(800) 432-4770
MIN. 48 HOURS BEFORE YOU EXCAVATE

NORTHEAST WRF GRIT REMOVAL, MOVING BELT FILTER AND EQUALIZATION SYSTEM IMPROVEMENTS

INFLUENT STRUCTURE MECHANICAL DEMO PLAN DETAILS

DWG NAME: M1.01 – M1.06	FIELD BOOK: AND M3.01 – M3.03	SURVEYED BY:	SCALE: VERT. N/A
CONTRACT NO.: 15-0045-UT	DATE DRAWN: MARCH 2016	DRAWN BY: MJG	HORIZ. AS SHOWN
JOB NO.: 2110-210-002	DESIGNED BY: LVM	CHECKED BY: TAT	SHEET NO.: 53 of 117

APPROVED FOR CONSTRUCTION

© COPYRIGHT KING ENGINEERING ASSOCIATES, INC. DRAWINGS AND CONCEPTS MAY NOT BE USED OR REPRODUCED WITHOUT WRITTEN PERMISSION. CONSENT IS HEREBY GRANTED SPECIFICALLY TO GOVERNMENTAL AGENCIES TO REPRODUCE THIS DOCUMENT IN COMPLIANCE WITH F.S. CHAPTER 119.

O:\ENV_ENG\2110\210\002\production\Drawings\M1.01 - M1.06 and M3.01 - M3.03.dwg, March 18, 2020 2:40 PM, King Engineering Associate Inc.

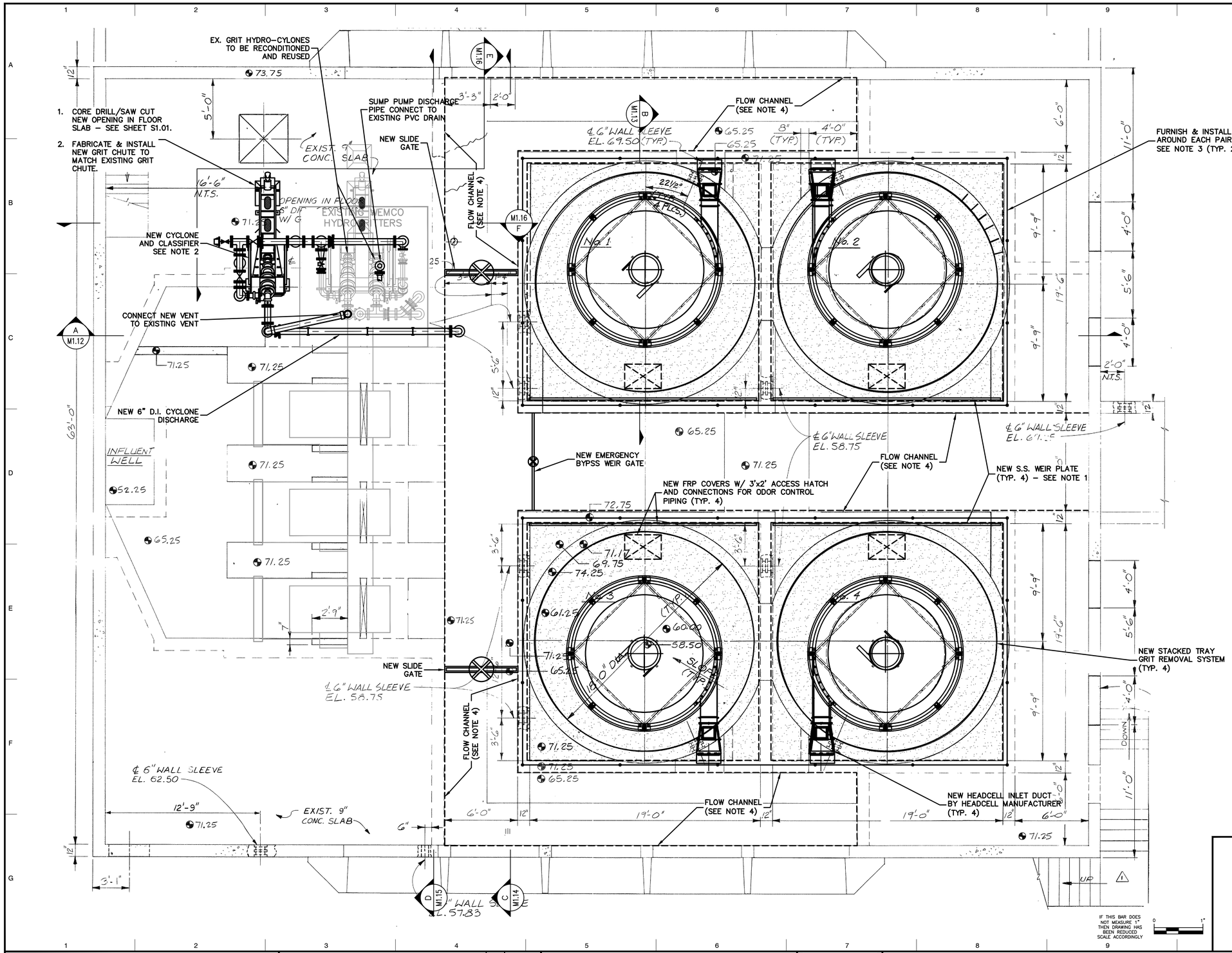

NOTES:

NOTE 1 –FURNISH AND INSTALL 17" X 3/8" 304 S.S. WEIR PLATES. ANCHOR TO WALL WITH 316 S.S. ANCHORS @ 12" C/C. PROVIDE NEOPRENE GASKETS. WEIR PLATES SHALL BE SLOTTED TO ALLOW 2" VERTICAL ADJUSTMENT, AND FURNISHED WITH 5" DIA. WASHERS. LENGTH AS REQUIRED.

NOTE 2 –CONTRACTOR TO FURNISH AND INSTALL NEW 1" SCH. 80 PVC EFW TO GRIT CLASSIFIER AND RUN 2" SCH. 80 PVC DRAIN FROM NEW GRIT CLASSIFIER TO EXISTING DRAIN SUMP.

NOTE 3 –FURNISH AND INSTALL (8) 2'x2' SIGNS MOUNTED TO THE HANDRAIL "DO NOT WALK ON THE TANK COVERS"

NOTE 4 –REPAIR AND COAT ALL FLOW CHANNEL WALLS AND FLOORS AS REQUIRED, BASED ON A VISUAL INSPECTION BY THE ENGINEER AS THOSE AREAS BECOME VISIBLE. THE FLOW CHANNEL EXTENDS TO AND INCLUDES THE SPLITTER BOX AND THE SCUM BOX BETWEEN THE THE PRIMARY CLARIFIERS, EXCLUDING THE ACTUAL FLUME. SEE LOCATION ON SHEET M2.11.

EXISTING NORTHEAST PLANT BACKGROUND INFORMATION BASED ON BRILEY, WILD & ASSOCIATES RECORD DRAWINGS.

BID DOCUMENTS

King
ENGINEERING ASSOCIATES, INC.
4921 Memorial Highway
One Memorial Center, Suite 300
Tampa, Florida 33634
Phone 813 880-8881
Fax 813 880-8882
www.kingengineering.com
Engineering License #2610

© COPYRIGHT 2010 KING ENGINEERING ASSOCIATES, INC. DRAWINGS AND CONCEPTS MAY NOT BE USED OR REPRODUCED WITHOUT WRITTEN PERMISSION CONSENT IS HEREBY GRANTED SPECIFICALLY TO GOVERNMENTAL AGENCIES TO REPRODUCE THIS DOCUMENT IN COMPLIANCE WITH F.S. CHAPTER 119.

RECORD DRAWINGS
SURVEYED BY: | DRAWN BY:
REVIEWED BY: PROJECT ENGINEER | DATE
APPROVED BY: ENGINEER | DATE

REVISION	BY	DATE

CITY OF CLEARWATER, FLORIDA
ENGINEERING DEPARTMENT
100 S. MYRTLE AVE.
CLEARWATER, FL 33756

INVESTIGATE BEFORE YOU EXCAVATE
CALL 811
SUNSHINE STATE ONE CALL OF FLORIDA
www.callsunshine.com
(800) 432-4770
MIN. 48 HOURS BEFORE YOU EXCAVATE

NORTHEAST WRF GRIT REMOVAL, MOVING BELT FILTER AND EQUALIZATION SYSTEM IMPROVEMENTS

INFLUENT STRUCTURE UPPER LEVEL MECHANICAL IMPROVEMENTS PLAN

DWG NAME: M1.12 – M1.13	FIELD BOOK:	SURVEYED BY:	SCALE: VERT. N/A
CONTRACT NO.: 15-0045-UT	DATE DRAWN: MARCH 2016	DRAWN BY: MJG	HORIZ. AS SHOWN
JOB NO.: 2110-210-002	DESIGNED BY: LVM	CHECKED BY: TAT	SHEET NO.: 54 of 117

APPROVED FOR CONSTRUCTION | DATE

O:\ENV_ENG\2110\210\002\production\Drawings\M1.12 - M1.13.dwg, March 18, 2020 2:42 PM, King Engineering Associate Inc.

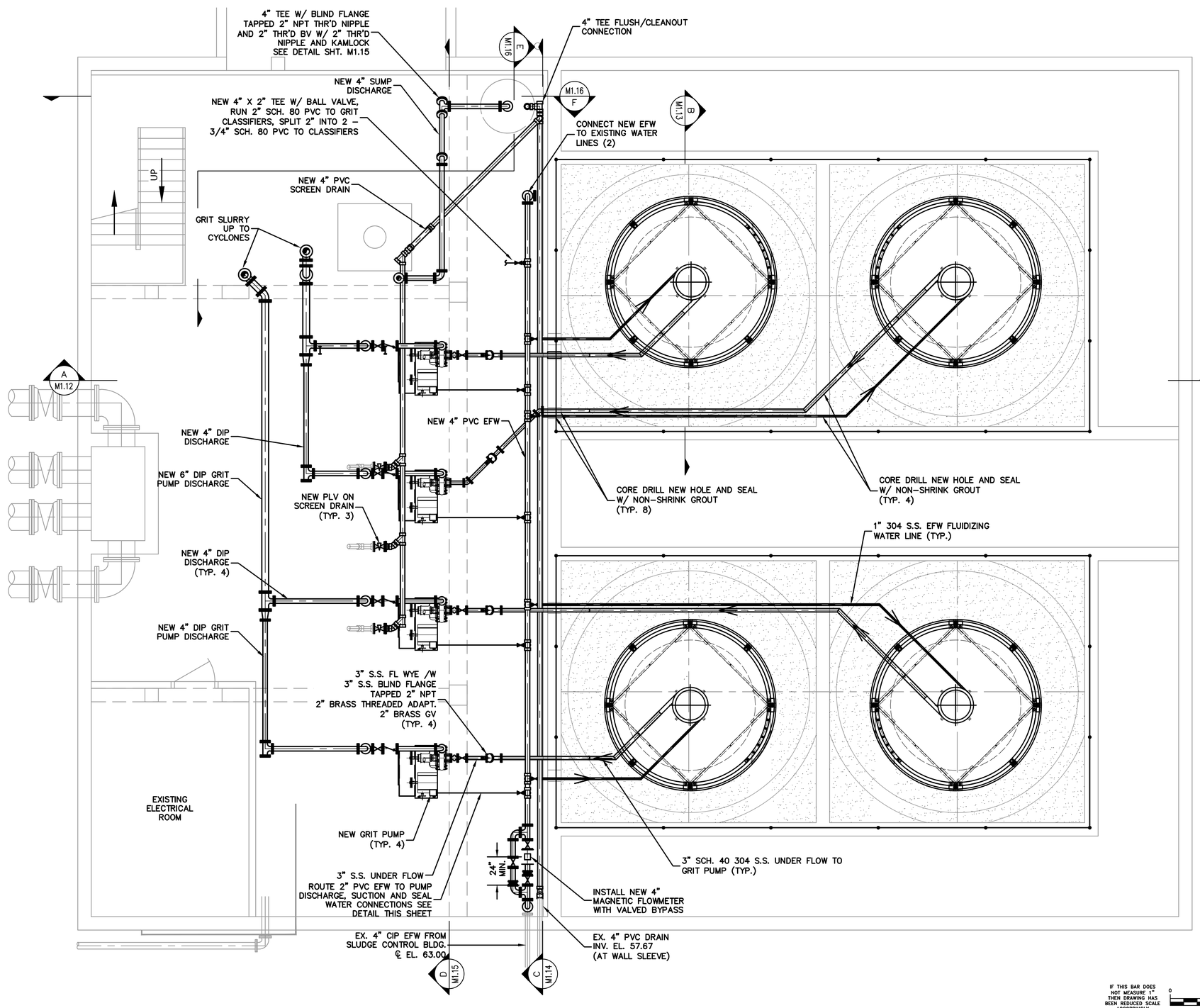

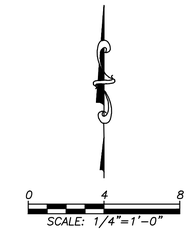

NOTES:

1. CONNECT TO PUMP PIPING USING S.S. SADDLE.
2. SOLENOID VAVLE INTERLOCKED TO OPEN WHEN PUMP OPERATES.

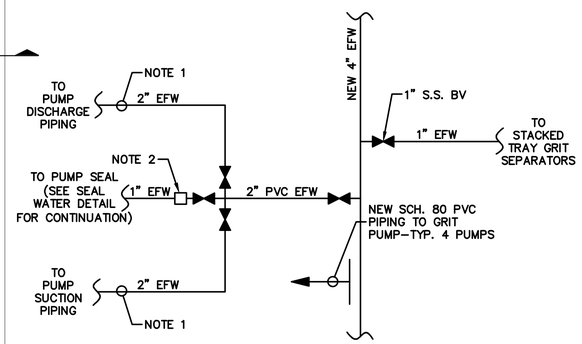

EFW WATER SERVICE DIAGRAM
(TYP. 4 SEPARATORS/PUMPS)

BID DOCUMENTS

IF THIS BAR DOES NOT MEASURE 1" THEN DRAWING HAS BEEN REDUCED SCALE ACCORDINGLY
0 1"

King
ENGINEERING ASSOCIATES, INC.
4921 Memorial Highway
One Memorial Center, Suite 300
Tampa, Florida 33634
Phone 813 880-8881
Fax 813 880-8882
www.kingengineering.com
Engineering License #2610

RECORD DRAWINGS
SURVEYED BY: DRAWN BY:
REVIEWED BY: PROJECT ENGINEER DATE
APPROVED BY: ENGINEER DATE

REVISION	BY	DATE

CITY OF CLEARWATER, FLORIDA
ENGINEERING DEPARTMENT
100 S. MYRTLE AVE.
CLEARWATER, FL 33756

INVESTIGATE BEFORE YOU EXCAVATE
CALL 811
SUNSHINE STATE ONE CALL OF FLORIDA
www.callsunshine.com
(800) 432-4770
MIN. 48 HOURS BEFORE YOU EXCAVATE

NORTHEAST WRF GRIT REMOVAL, MOVING BELT FILTER AND EQUALIZATION SYSTEM IMPROVEMENTS

INFLUENT STRUCTURE LOWER LEVEL MECHANICAL IMPROVEMENTS PLAN

DWG NAME: M1.11 – M1.13 AND M1.14 – M1.16	FIELD BOOK:	SURVEYED BY:	SCALE: VERT. N/A
CONTRACT NO.: 15-0045-UT	DATE DRAWN: MARCH 2016	DRAWN BY: MJG	HORIZ. AS SHOWN
JOB NO.: 2110-210-002	DESIGNED BY: LVM	CHECKED BY: TAT	SHEET NO.: 55 of 117
APPROVED FOR CONSTRUCTION			

© COPYRIGHT 2010 KING ENGINEERING ASSOCIATES, INC. DRAWINGS AND CONCEPTS MAY NOT BE USED OR REPRODUCED WITHOUT WRITTEN PERMISSION. CONSENT IS HEREBY GRANTED SPECIFICALLY TO GOVERNMENTAL AGENCIES TO REPRODUCE THIS DOCUMENT IN COMPLIANCE WITH F.S. CHAPTER 119.

O:\ENV_ENG\2110\210\002\production\Drawings\M1.11 - M1.13 and M1.14 - M1.16.dwg, March 18, 2020 2:43 PM, King Engineering Associate Inc.

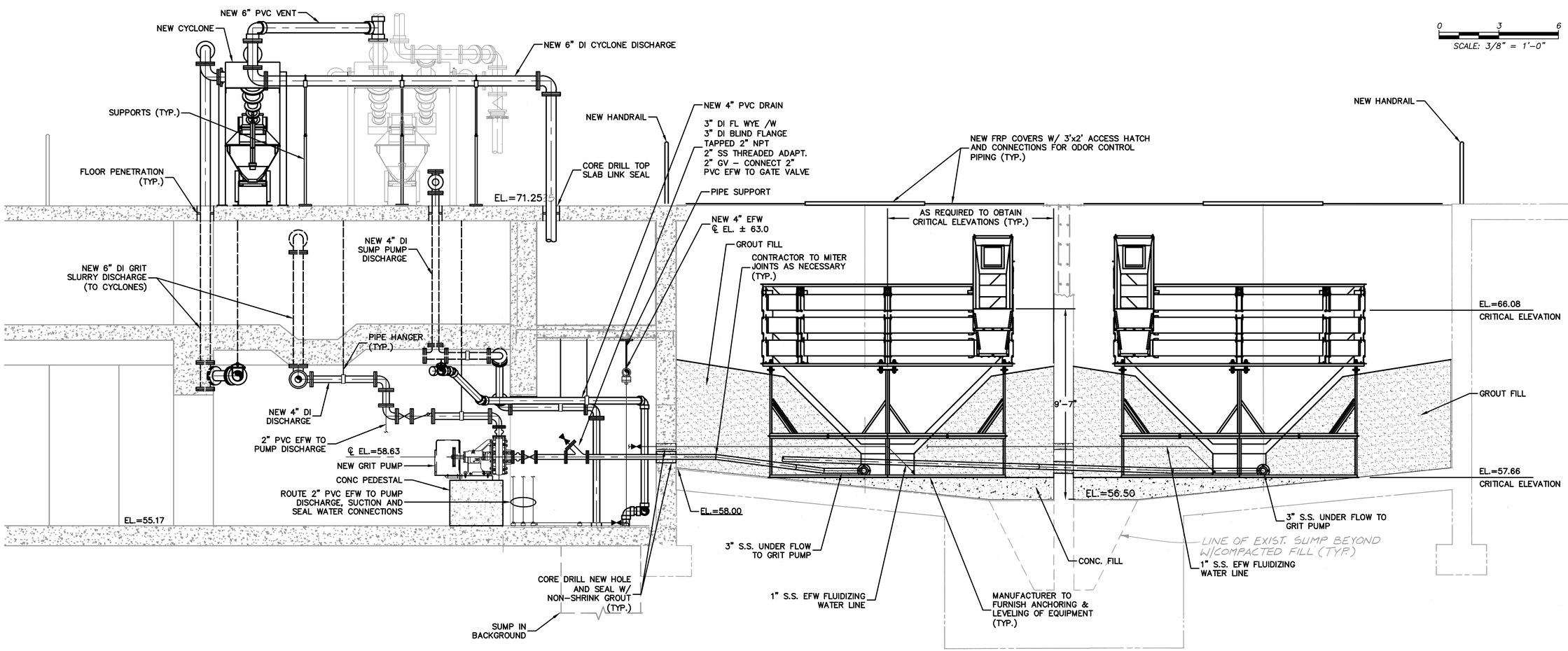

0 3 6
SCALE: 3/8" = 1'-0"

SECTION

SCALE: 3/8"=1'-0"

A M1.10 | A M1.11

EXISTING NORTHEAST PLANT BACKGROUND INFORMATION BASED ON BRILEY, WILD & ASSOCIATES RECORD DRAWINGS.

BID DOCUMENTS

King
ENGINEERING ASSOCIATES, INC.
4921 Memorial Highway
One Memorial Center, Suite 300
Tampa, Florida 33634
Phone 813 880-8881
Fax 813 880-8882
www.kingengineering.com
Engineering License #2610

IF THIS BAR DOES NOT MEASURE 1" THEN DRAWING HAS BEEN REDUCED SCALE ACCORDINGLY
0 1"

RECORD DRAWINGS
SURVEYED BY: DRAWN BY:
REVIEWED BY: PROJECT ENGINEER DATE
APPROVED BY: ENGINEER DATE

REVISION	BY	DATE

CITY OF CLEARWATER, FLORIDA
ENGINEERING DEPARTMENT
100 S. MYRTLE AVE.
CLEARWATER, FL 33756

INVESTIGATE BEFORE YOU EXCAVATE
CALL 811
SUNSHINE STATE ONE CALL OF FLORIDA
www.callsunshine.com
(800) 432-4770
MIN. 48 HOURS BEFORE YOU EXCAVATE

NORTHEAST WRF GRIT REMOVAL, MOVING BELT FILTER AND EQUALIZATION SYSTEM IMPROVEMENTS

INFLUENT STRUCTURE HEAD-CELL SECTION A

DWG NAME: M1.12 – M1.13	FIELD BOOK:	SURVEYED BY:	SCALE: VERT. N/A
CONTRACT NO.: 15-0045-UT	DATE DRAWN: MARCH 2016	DRAWN BY: MJG	HORIZ. AS SHOWN
JOB NO.: 2110-210-002	DESIGNED BY: LVM	CHECKED BY: TAT	SHEET NO.: 56 of 117

APPROVED FOR CONSTRUCTION DATE

© COPYRIGHT 2010 KING ENGINEERING ASSOCIATES, INC. DRAWINGS AND CONCEPTS MAY NOT BE USED OR REPRODUCED WITHOUT WRITTEN PERMISSION. CONSENT IS HEREBY GRANTED SPECIFICALLY TO GOVERNMENTAL AGENCIES TO REPRODUCE THIS DOCUMENT IN COMPLIANCE WITH F.S. CHAPTER 119.

O:\ENV_ENG\2110\210\002\production\Drawings\M1.12 - M1.13.dwg, March 18, 2020 2:45 PM, King Engineering Associate Inc.

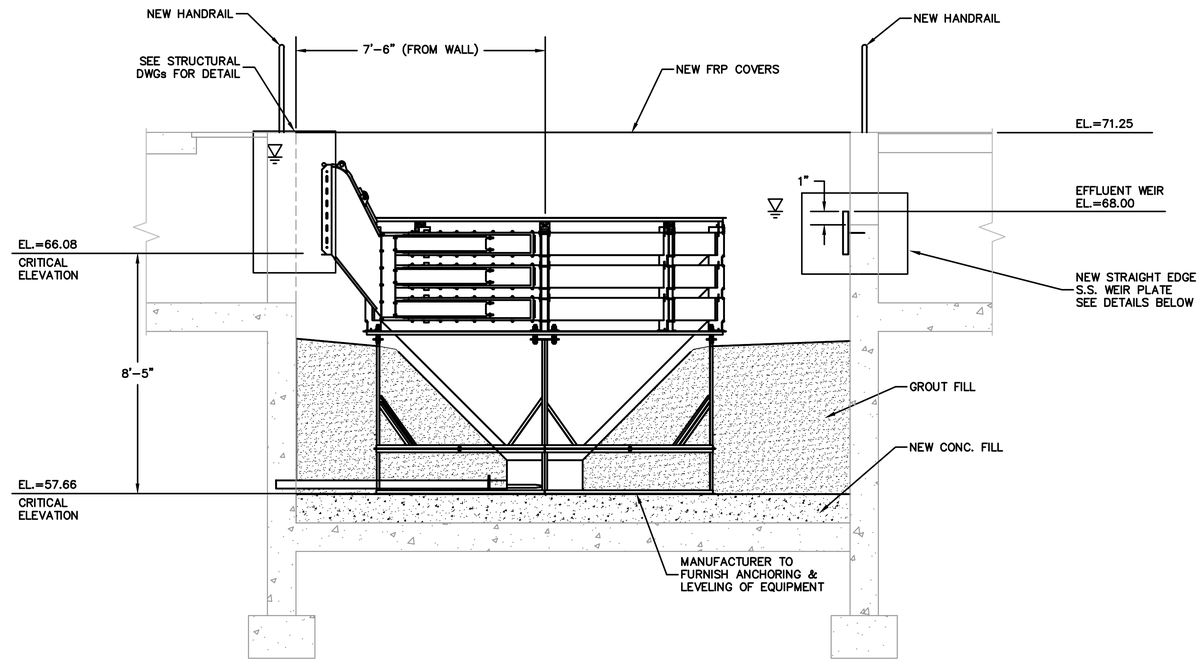

0 3 6
SCALE: 3/8" = 1'-0"

SECTION

SCALE: 3/8"=1'-0"

B M1.10 / B M1.11

0 1/2 1
SCALE: 1 1/2"=1'-0"

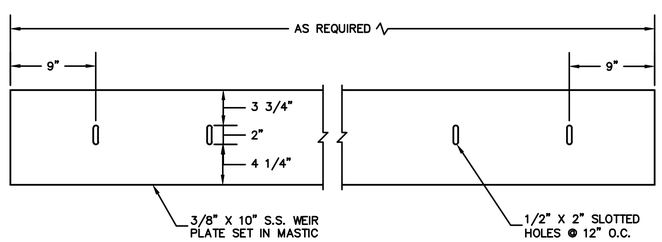

WEIR PLATE DETAIL

SCALE: 1 1/2"=1'-0"

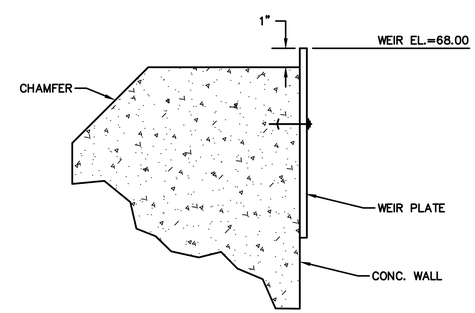

0 4in 8in
SCALE: 3" = 1'-0"

WEIR PLATE INSTALLATION DETAIL

SCALE: 3"=1'-0"

EXISTING NORTHEAST PLANT BACKGROUND INFORMATION BASED ON BRILEY, WILD & ASSOCIATES RECORD DRAWINGS.

BID DOCUMENTS

IF THIS BAR DOES NOT MEASURE 1" THEN DRAWING HAS BEEN REDUCED SCALE ACCORDINGLY
0 1"

King
ENGINEERING ASSOCIATES, INC.
4921 Memorial Highway
One Memorial Center, Suite 300
Tampa, Florida 33634
Phone 813 880-8881
Fax 813 880-8882
www.kingengineering.com
Engineering License #2610

RECORD DRAWINGS
SURVEYED BY: DRAWN BY:
REVIEWED BY: PROJECT ENGINEER DATE
APPROVED BY: ENGINEER DATE

REVISION	BY	DATE

CITY OF CLEARWATER, FLORIDA
ENGINEERING DEPARTMENT
100 S. MYRTLE AVE.
CLEARWATER, FL 33756

INVESTIGATE BEFORE YOU EXCAVATE
CALL 811
SUNSHINE STATE ONE CALL OF FLORIDA
www.callsunshine.com
(800) 432-4770
MIN. 48 HOURS BEFORE YOU EXCAVATE

NORTHEAST WRF GRIT REMOVAL, MOVING BELT FILTER AND EQUALIZATION SYSTEM IMPROVEMENTS

INFLUENT STRUCTURE HEAD-CELL SECTION B

DWG NAME: M1.12 – M1.13	FIELD BOOK:	SURVEYED BY:	SCALE: VERT. N/A
CONTRACT NO.: 15-0045-UT	DATE DRAWN: MARCH 2016	DRAWN BY: MJG	HORIZ. AS SHOWN
JOB NO.: 2110-210-002	DESIGNED BY: LVM	CHECKED BY: TAT	SHEET NO.: 57 of 117

APPROVED FOR CONSTRUCTION DATE

© COPYRIGHT 2010 KING ENGINEERING ASSOCIATES, INC. DRAWINGS AND CONCEPTS MAY NOT BE USED OR REPRODUCED WITHOUT WRITTEN PERMISSION CONSENT IS HEREBY GRANTED SPECIFICALLY TO GOVERNMENTAL AGENCIES TO REPRODUCE THIS DOCUMENT IN COMPLIANCE WITH F.S. CHAPTER 119.

O:\ENV_ENG\2110\210\002\production\Drawings\M1.12 - M1.13.dwg, March 18, 2020 2:47 PM, King Engineering Associate Inc.

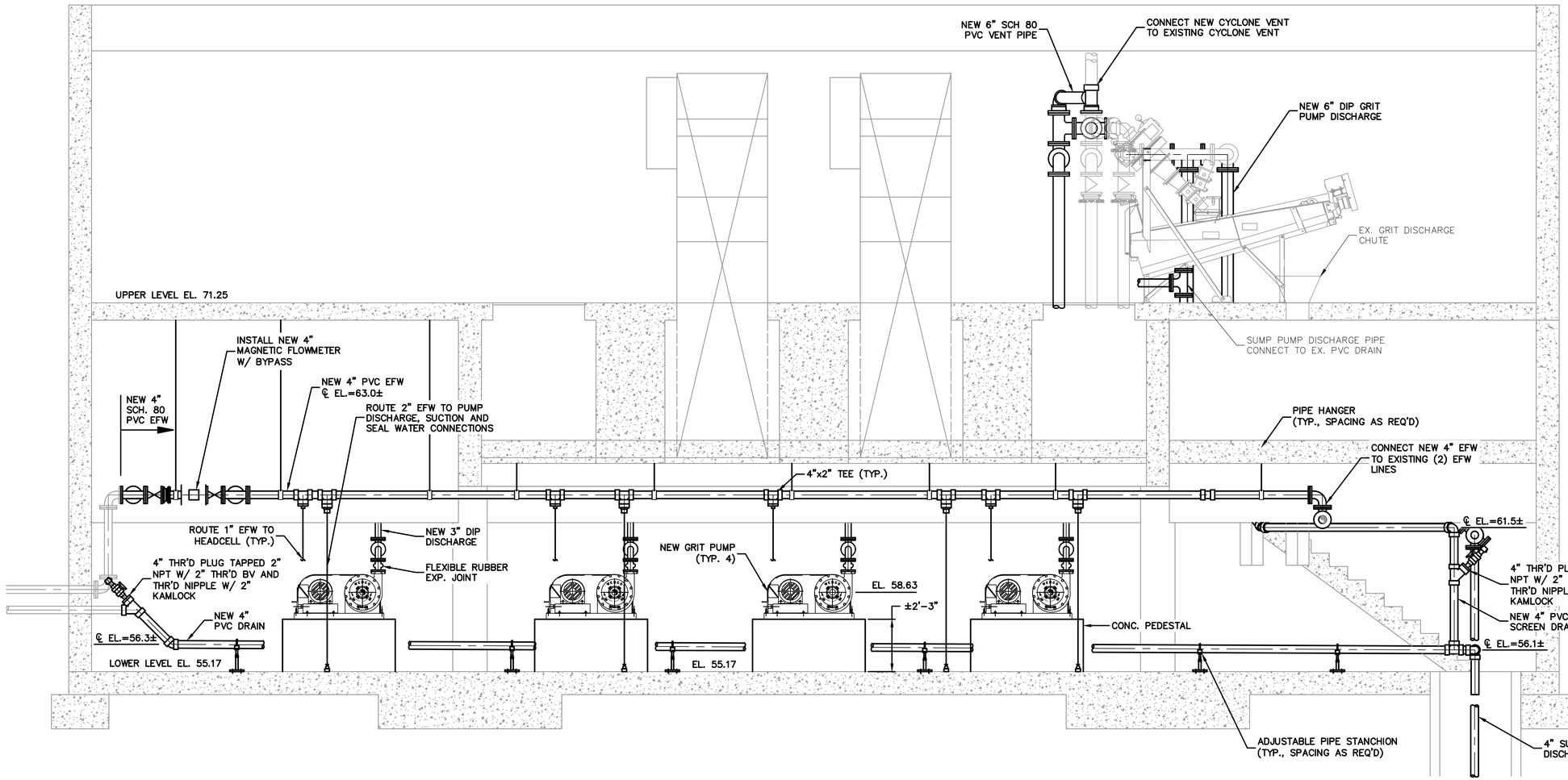

0 3 6
SCALE: 3/8" = 1'-0"

SECTION C/M1.10 C/M1.11
SCALE: 3/8"=1'-0"

IF THIS BAR DOES NOT MEASURE 1" THEN DRAWING HAS BEEN REDUCED SCALE ACCORDINGLY 0 1"

BID DOCUMENTS

King
ENGINEERING ASSOCIATES, INC.
4921 Memorial Highway
One Memorial Center, Suite 300
Tampa, Florida 33634
Phone 813 880-8881
Fax 813 880-8882
www.kingengineering.com
Engineering License #2610

RECORD DRAWINGS
SURVEYED BY: DRAWN BY:
REVIEWED BY: PROJECT ENGINEER DATE
APPROVED BY: ENGINEER DATE

REVISION	BY	DATE

CITY OF CLEARWATER, FLORIDA
ENGINEERING DEPARTMENT
100 S. MYRTLE AVE.
CLEARWATER, FL 33756

INVESTIGATE BEFORE YOU EXCAVATE
CALL 811
SUNSHINE STATE ONE CALL OF FLORIDA
www.callsunshine.com
(800) 432-4770
MIN. 48 HOURS BEFORE YOU EXCAVATE

NORTHEAST WRF GRIT REMOVAL, MOVING BELT FILTER AND EQUALIZATION SYSTEM IMPROVEMENTS

INFLUENT STRUCTURE MECHANICAL SECTION - C

DWG NAME: M1.11 – M1.13 AND M1.14 – M1.16	FIELD BOOK:	SURVEYED BY:	SCALE: VERT. N/A
CONTRACT NO.: 15-0045-UT	DATE DRAWN: MARCH 2016	DRAWN BY: MJG	HORIZ. AS SHOWN
JOB NO.: 2110-210-002	DESIGNED BY: LVM	CHECKED BY: TAT	SHEET NO.: 58 of 117

APPROVED FOR CONSTRUCTION

© COPYRIGHT 2010 KING ENGINEERING ASSOCIATES, INC. DRAWINGS AND CONCEPTS MAY NOT BE USED OR REPRODUCED WITHOUT WRITTEN PERMISSION CONSENT IS HEREBY GRANTED SPECIFICALLY TO GOVERNMENTAL AGENCIES TO REPRODUCE THIS DOCUMENT IN COMPLIANCE WITH F.S. CHAPTER 119.

O:\ENV_ENG\2110\210\002\production\Drawings\M1.11 - M1.13 and M1.14 - M1.16.dwg, March 18, 2020 2:47 PM, King Engineering Associate Inc.

SCALE: 3/8" = 1'-0"

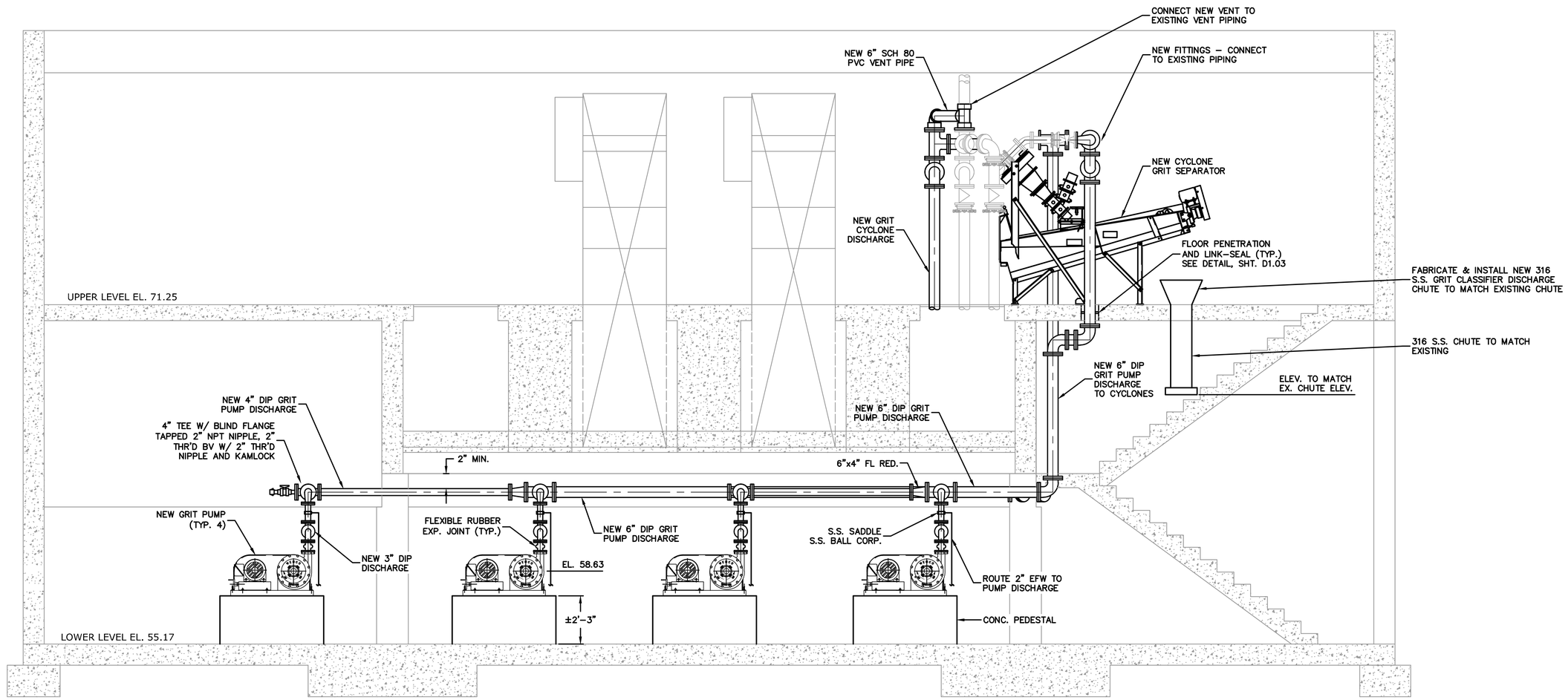

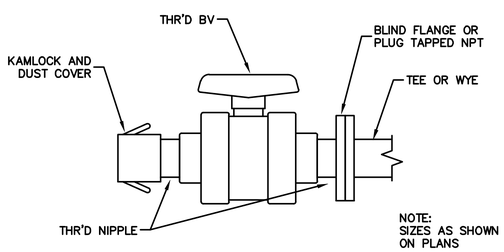

FLUSH/CLEANOUT CONNECTION DETAIL

SCALE: NTS

SECTION D/M1.10 D/M1.11

SCALE: 3/8"=1'-0"

IF THIS BAR DOES NOT MEASURE 1" THEN DRAWING HAS BEEN REDUCED SCALE ACCORDINGLY

BID DOCUMENTS

King
ENGINEERING ASSOCIATES, INC.
4921 Memorial Highway
One Memorial Center, Suite 300
Tampa, Florida 33634
Phone 813 880-8881
Fax 813 880-8882
www.kingengineering.com
Engineering License #2610

RECORD DRAWINGS

SURVEYED BY: DRAWN BY:
REVIEWED BY: PROJECT ENGINEER DATE
APPROVED BY: ENGINEER DATE

REVISION	BY	DATE

CITY OF CLEARWATER, FLORIDA
ENGINEERING DEPARTMENT
100 S. MYRTLE AVE.
CLEARWATER, FL 33756

INVESTIGATE BEFORE YOU EXCAVATE
CALL 811
SUNSHINE STATE ONE CALL OF FLORIDA
www.callsunshine.com
(800) 432-4770
MIN. 48 HOURS BEFORE YOU EXCAVATE

NORTHEAST WRF GRIT REMOVAL, MOVING BELT FILTER AND EQUALIZATION SYSTEM IMPROVEMENTS

INFLUENT STRUCTURE MECHANICAL SECTION - D

DWG NAME: M1.11 – M1.13 AND M1.14 – M1.16	FIELD BOOK:	SURVEYED BY:	SCALE: VERT. N/A
CONTRACT NO.: 15-0045-UT	DATE DRAWN: MARCH 2016	DRAWN BY: MJG	HORIZ. AS SHOWN
JOB NO.: 2110-210-002	DESIGNED BY: LVM	CHECKED BY: TAT	SHEET NO.: 59 of 117

APPROVED FOR CONSTRUCTION

© COPYRIGHT 2013 KING ENGINEERING ASSOCIATES, INC. DRAWINGS AND CONCEPTS MAY NOT BE USED OR REPRODUCED WITHOUT WRITTEN PERMISSION CONSENT IS HEREBY GRANTED SPECIFICALLY TO GOVERNMENTAL AGENCIES TO REPRODUCE THIS DOCUMENT IN COMPLIANCE WITH F.S. CHAPTER 119.

O:\ENV_ENG\2110\210\002\production\Drawings\M1.11 - M1.13 and M1.14 - M1.16.dwg, March 18, 2020 2:48 PM, King Engineering Associate Inc.

SCALE: 3/8" = 1'-0"

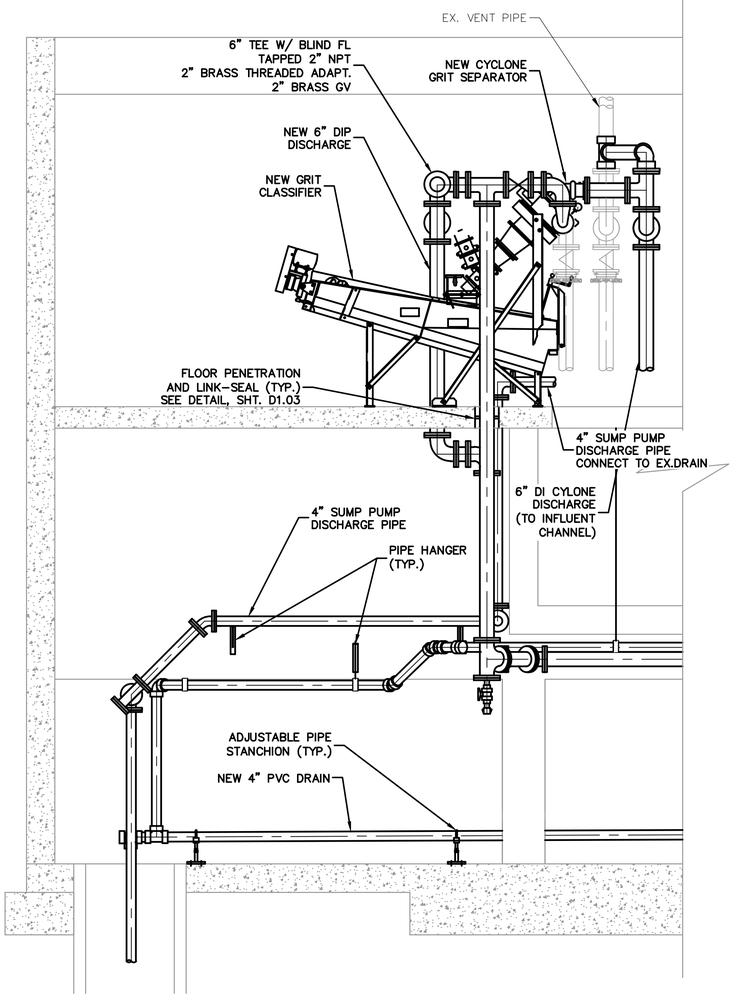

SECTION E M1.10 / E M1.11
SCALE: 3/8"=1'-0"

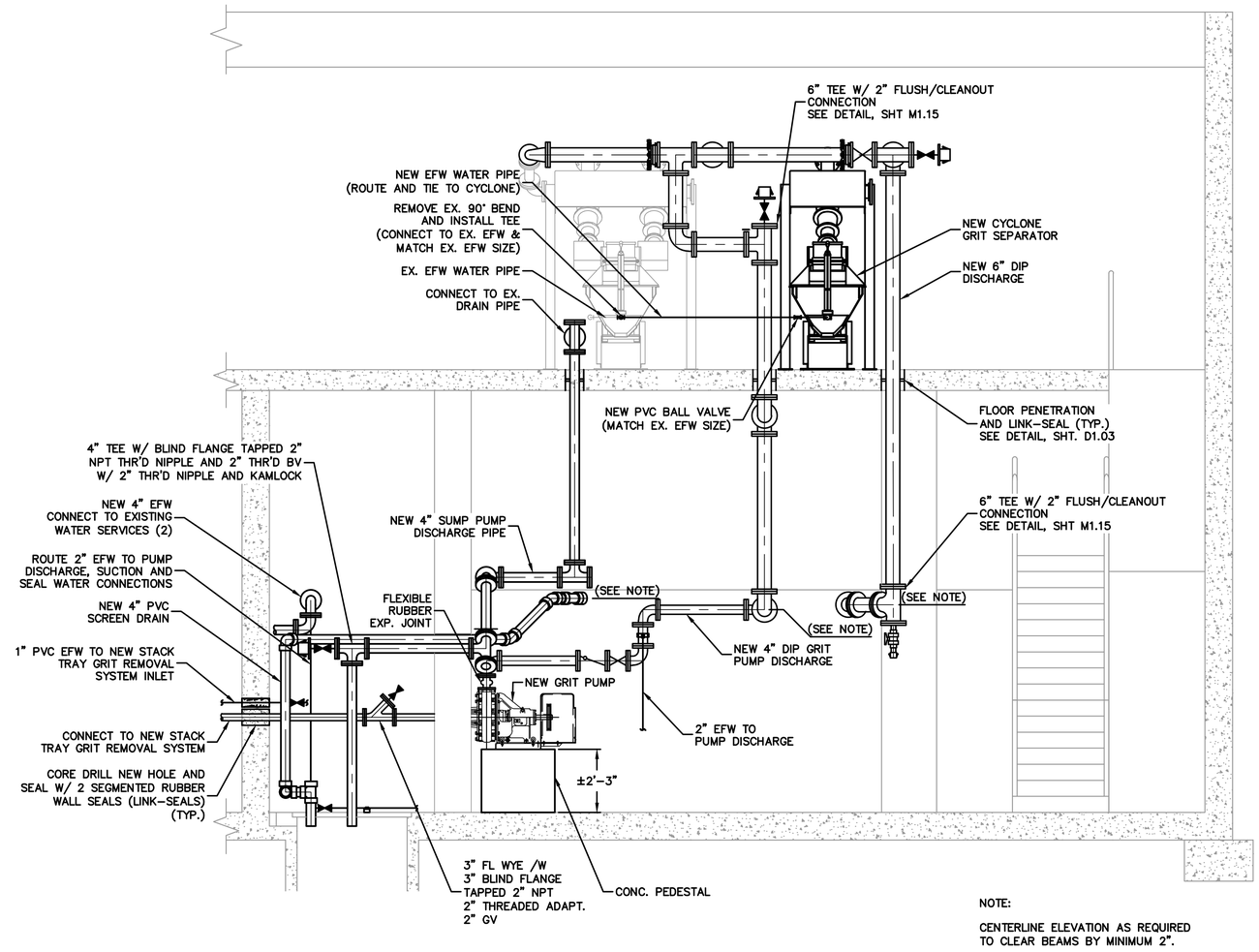

NOTE:

CENTERLINE ELEVATION AS REQUIRED TO CLEAR BEAMS BY MINIMUM 2".

SECTION F M1.10 / F M1.11
SCALE: 3/8"=1'-0"

BID DOCUMENTS

IF THIS BAR DOES NOT MEASURE 1" THEN DRAWING HAS BEEN REDUCED SCALE ACCORDINGLY

King
ENGINEERING ASSOCIATES, INC.
4921 Memorial Highway
One Memorial Center, Suite 300
Tampa, Florida 33634
Phone 813 880-8881
Fax 813 880-8882
www.kingengineering.com
Engineering License #2610

RECORD DRAWINGS
SURVEYED BY: DRAWN BY:
REVIEWED BY: PROJECT ENGINEER DATE
APPROVED BY: ENGINEER DATE

REVISION	BY	DATE

CITY OF CLEARWATER, FLORIDA
ENGINEERING DEPARTMENT
100 S. MYRTLE AVE.
CLEARWATER, FL 33756

INVESTIGATE BEFORE YOU EXCAVATE
CALL 811
SUNSHINE STATE ONE CALL OF FLORIDA
www.callsunshine.com
(800) 432-4770
MIN. 48 HOURS BEFORE YOU EXCAVATE

NORTHEAST WRF GRIT REMOVAL, MOVING BELT FILTER AND EQUALIZATION SYSTEM IMPROVEMENTS

INFLUENT STRUCTURE MECHANICAL SECTIONS - E & F

DWG NAME: M1.11 – M1.13 AND M1.14 – M1.16	FIELD BOOK:	SURVEYED BY:	SCALE: VERT. N/A
CONTRACT NO.: 15-0045-UT	DATE DRAWN: MARCH 2016	DRAWN BY: MJG	HORIZ. AS SHOWN
JOB NO.: 2110-210-002	DESIGNED BY: LVM	CHECKED BY: TAT	SHEET NO.: 60 of 117

APPROVED FOR CONSTRUCTION

© COPYRIGHT 2010 KING ENGINEERING ASSOCIATES, INC. DRAWINGS AND CONCEPTS MAY NOT BE USED OR REPRODUCED WITHOUT WRITTEN PERMISSION CONSENT IS HEREBY GRANTED SPECIFICALLY TO GOVERNMENTAL AGENCIES TO REPRODUCE THIS DOCUMENT IN COMPLIANCE WITH F.S. CHAPTER 119.

O:\ENV_ENG\2110\210\002\production\Drawings\M1.11 - M1.13 and M1.14 - M1.16.dwg, March 18, 2020 2:48 PM, King Engineering Associate Inc.

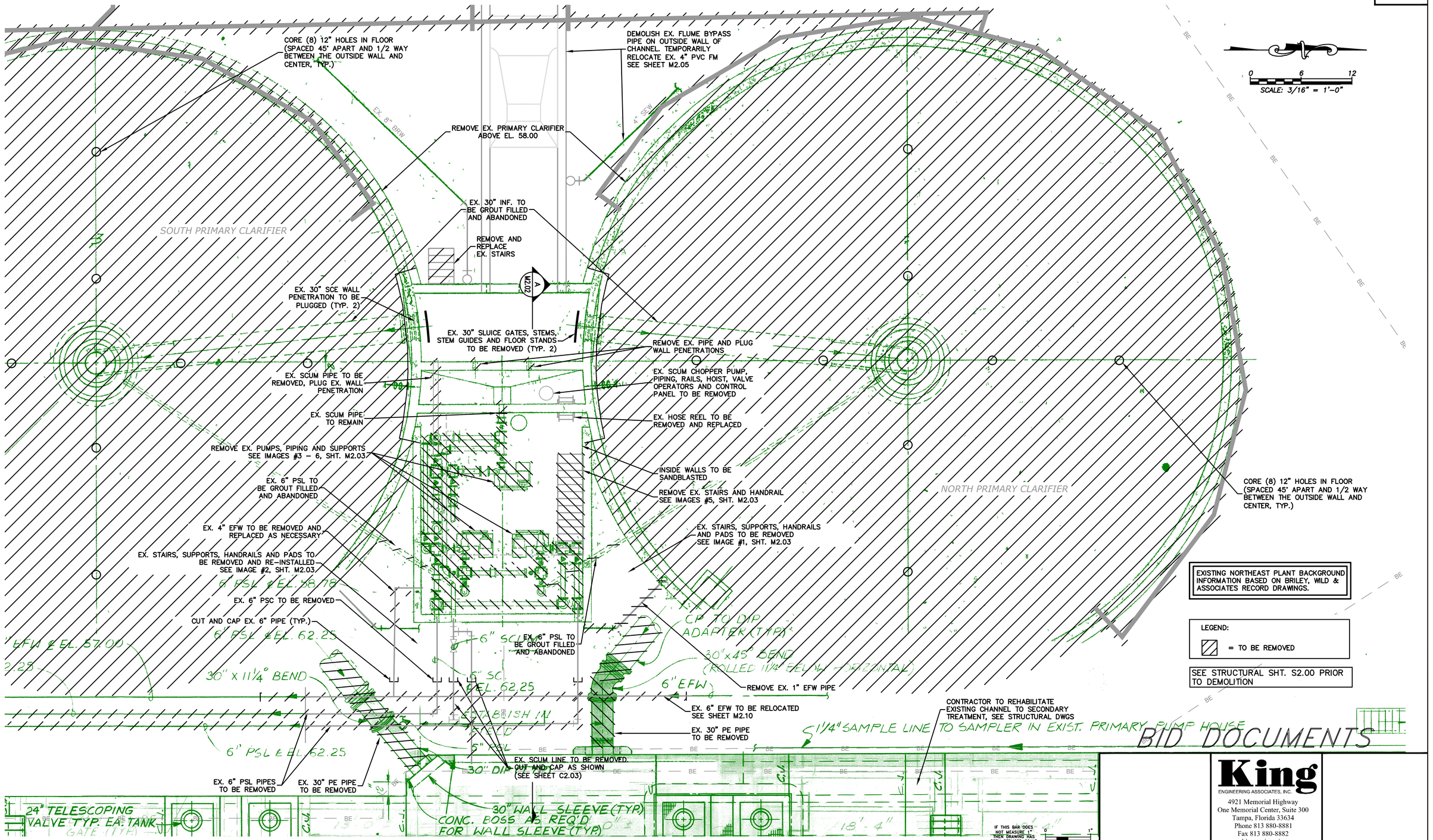

King
ENGINEERING ASSOCIATES, INC.
4921 Memorial Highway
One Memorial Center, Suite 300
Tampa, Florida 33634
Phone 813 880-8881
Fax 813 880-8882
www.kingengineering.com
Engineering License #2610

RECORD DRAWINGS

SURVEYED BY: | DRAWN BY:
REVIEWED BY: PROJECT ENGINEER DATE
APPROVED BY: ENGINEER DATE

REVISION	BY	DATE

CITY OF CLEARWATER, FLORIDA
ENGINEERING DEPARTMENT
100 S. MYRTLE AVE.
CLEARWATER, FL 33756

INVESTIGATE BEFORE YOU EXCAVATE
CALL 811
SUNSHINE STATE ONE CALL OF FLORIDA
www.callsunshine.com
(800) 432-4770
MIN. 48 HOURS BEFORE YOU EXCAVATE

NORTHEAST WRF GRIT REMOVAL, MOVING BELT FILTER AND EQUALIZATION SYSTEM IMPROVEMENTS

EX. PUMP BUILDING & PRIMARY CLARIFIER DEMO PLAN

DWG NAME: M2.01 – M2.05	FIELD BOOK:	SURVEYED BY:	SCALE: VERT. N/A
CONTRACT NO.: 15–0045–UT	DATE DRAWN: MARCH 2016	DRAWN BY: MJG	HORIZ. AS SHOWN
JOB NO.: 2110–210–002	DESIGNED BY: LVM	CHECKED BY: TAT	SHEET NO.: 61 of 117

APPROVED FOR CONSTRUCTION

SCALE: 3/8" = 1'-0"

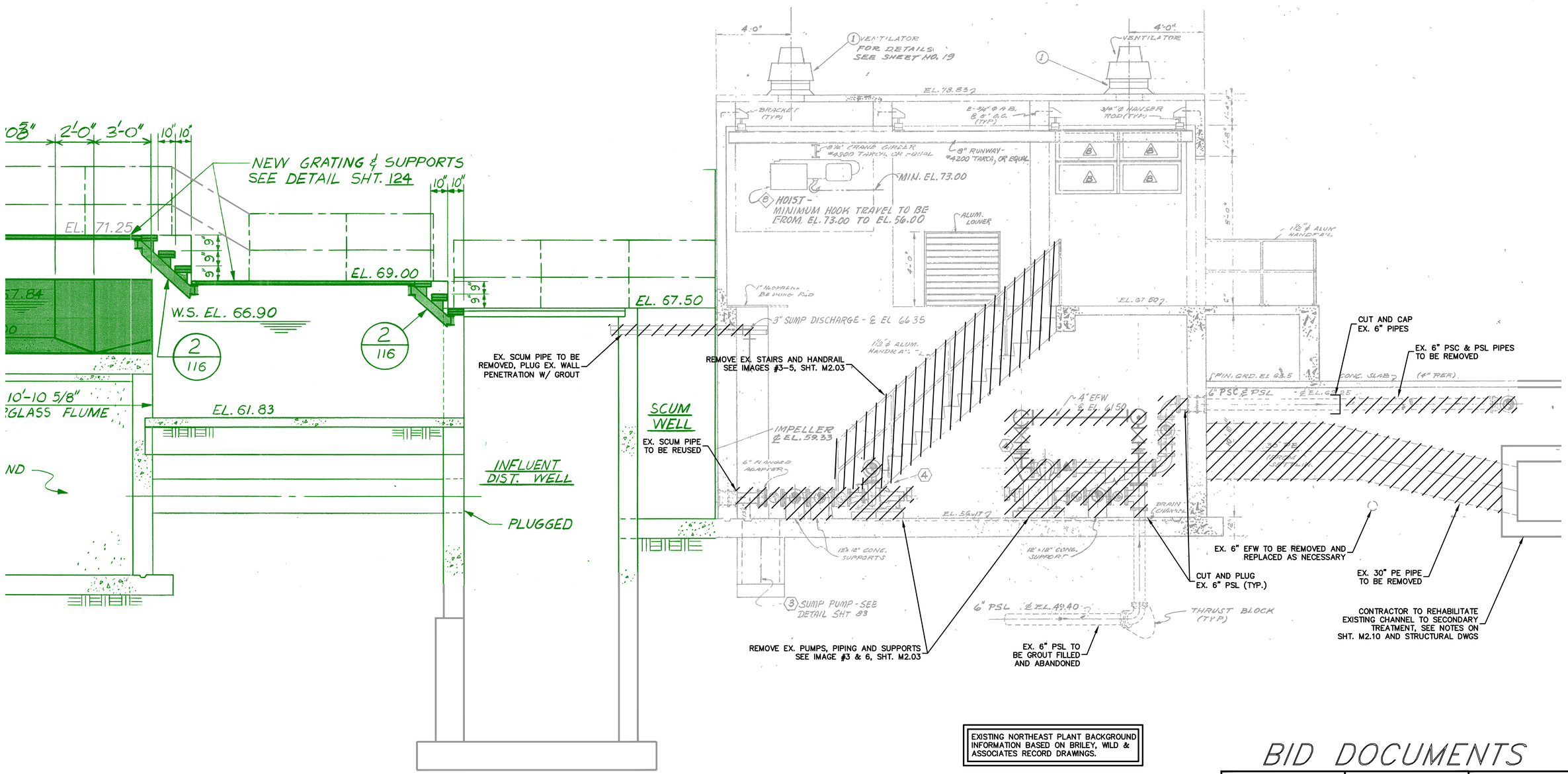

SECTION A / M2.01

SCALE: 3/8" = 1'-0"

EXISTING NORTHEAST PLANT BACKGROUND INFORMATION BASED ON BRILEY, WILD & ASSOCIATES RECORD DRAWINGS.

LEGEND:

= TO BE REMOVED

IF THIS BAR DOES NOT MEASURE 1" THEN DRAWING HAS BEEN REDUCED SCALE ACCORDINGLY

BID DOCUMENTS

King
ENGINEERING ASSOCIATES, INC.
4921 Memorial Highway
One Memorial Center, Suite 300
Tampa, Florida 33634
Phone 813 880-8881
Fax 813 880-8882
www.kingengineering.com
Engineering License #2610

RECORD DRAWINGS

SURVEYED BY: DRAWN BY:
REVIEWED BY: PROJECT ENGINEER DATE
APPROVED BY: ENGINEER DATE

REVISION	BY	DATE

CITY OF CLEARWATER, FLORIDA
ENGINEERING DEPARTMENT
100 S. MYRTLE AVE.
CLEARWATER, FL 33756

INVESTIGATE BEFORE YOU EXCAVATE
CALL 811
SUNSHINE STATE ONE CALL OF FLORIDA
www.callsunshine.com
(800) 432-4770
MIN. 48 HOURS BEFORE YOU EXCAVATE

NORTHEAST WRF GRIT REMOVAL, MOVING BELT FILTER AND EQUALIZATION SYSTEM IMPROVEMENTS

EX. PUMP BUILDING SECTION DEMO PLAN

DWG NAME: M2.01 – M2.05	FIELD BOOK:	SURVEYED BY:	SCALE: VERT. N/A
CONTRACT NO.: 15-0045-UT	DATE DRAWN: MARCH 2016	DRAWN BY: MJG	HORIZ. AS SHOWN
JOB NO.: 2110-210-002	DESIGNED BY: LVM	CHECKED BY: TAT	SHEET NO.: 61 of 117

APPROVED FOR CONSTRUCTION

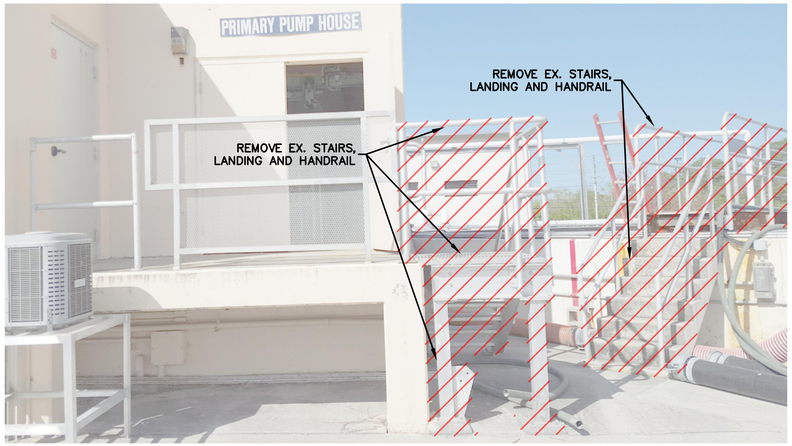

IMAGE #1

IMAGE #2

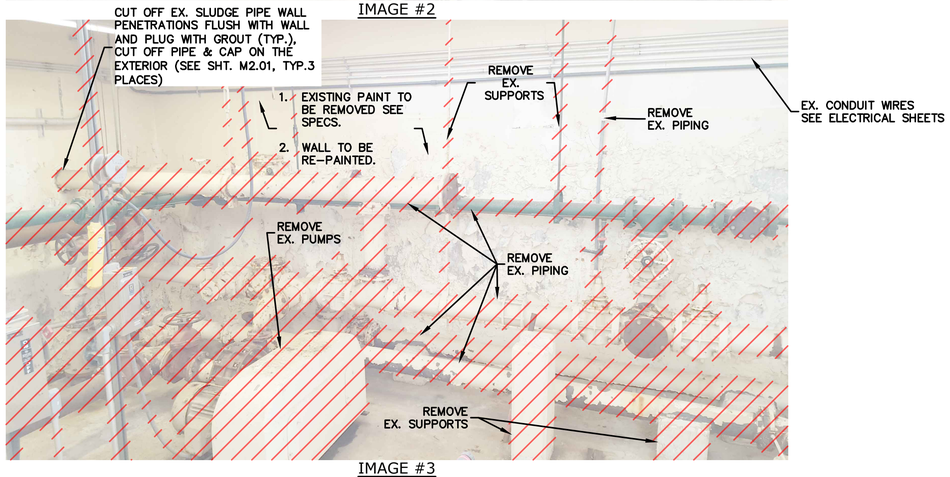

IMAGE #3

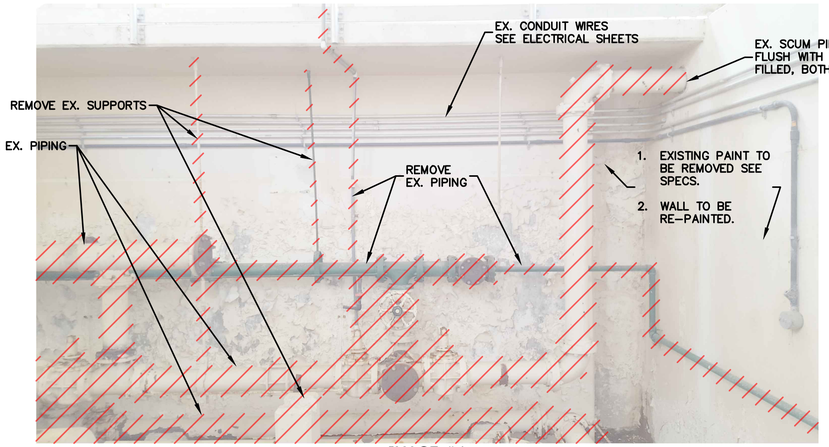

IMAGE #4

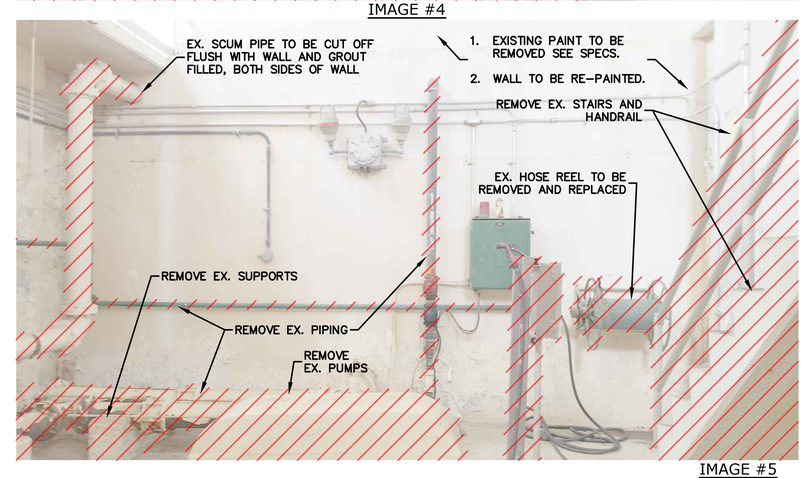

IMAGE #5

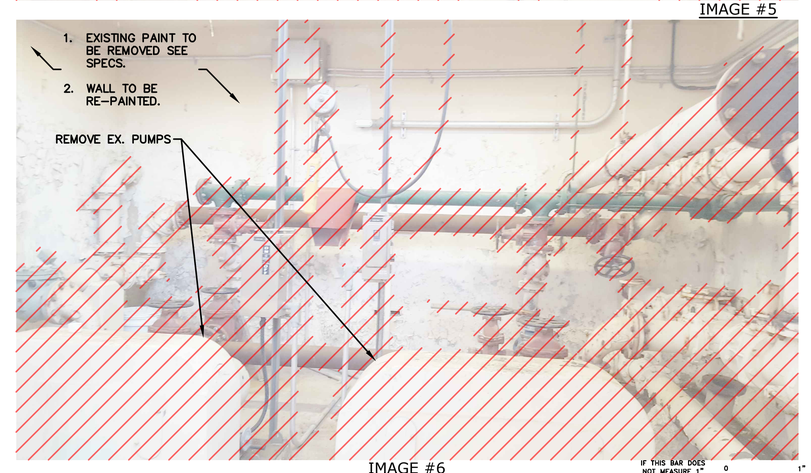

IMAGE #6

IF THIS BAR DOES NOT MEASURE 1" THEN DRAWING HAS BEEN REDUCED SCALE ACCORDINGLY 0 1"

LEGEND:

= TO BE REMOVED

NOTE:

EX. CONDUIT AND WIRE TO MCC TO BE REMOVED FOR ALL EQUIPMENT TO BE REMOVED, SEE ELECTRICAL SHEETS

BID DOCUMENTS

King
ENGINEERING ASSOCIATES, INC.
4921 Memorial Highway
One Memorial Center, Suite 300
Tampa, Florida 33634
Phone 813 880-8881
Fax 813 880-8882
www.kingengineering.com
Engineering License #2610

RECORD DRAWINGS
SURVEYED BY: DRAWN BY:
REVIEWED BY:
PROJECT ENGINEER DATE
APPROVED BY:
ENGINEER DATE

REVISION	BY	DATE

CITY OF CLEARWATER, FLORIDA
ENGINEERING DEPARTMENT
100 S. MYRTLE AVE.
CLEARWATER, FL 33756

INVESTIGATE BEFORE YOU EXCAVATE
CALL 811
SUNSHINE STATE ONE CALL OF FLORIDA
www.callsunshine.com
(800) 432-4770
MIN. 48 HOURS BEFORE YOU EXCAVATE

NORTHEAST WRF GRIT REMOVAL, MOVING BELT FILTER AND EQUALIZATION SYSTEM IMPROVEMENTS

EX. PUMP BUILDING SECTION DEMO PLAN DETAILS

DWG NAME: M2.01 – M2.05	FIELD BOOK:	SURVEYED BY:	SCALE: VERT. N/A
CONTRACT NO.: 15-0045-UT	DATE DRAWN: MARCH 2016	DRAWN BY: MJG	HORIZ. AS SHOWN
JOB NO.: 2110-210-002	DESIGNED BY: LVM	CHECKED BY: TAT	SHEET NO.: 63 of 117

APPROVED FOR CONSTRUCTION

© COPYRIGHT 2010 KING ENGINEERING ASSOCIATES, INC. DRAWINGS AND CONCEPTS MAY NOT BE USED OR REPRODUCED WITHOUT WRITTEN PERMISSION CONSENT IS HEREBY GRANTED SPECIFICALLY TO GOVERNMENTAL AGENCIES TO REPRODUCE THIS DOCUMENT IN COMPLIANCE WITH F.S. CHAPTER 119.

O:\ENV_ENG\2110\210\002\production\Drawings\M2.01 - M2.05.dwg, March 18, 2020 2:49 PM, King Engineering Associate Inc.

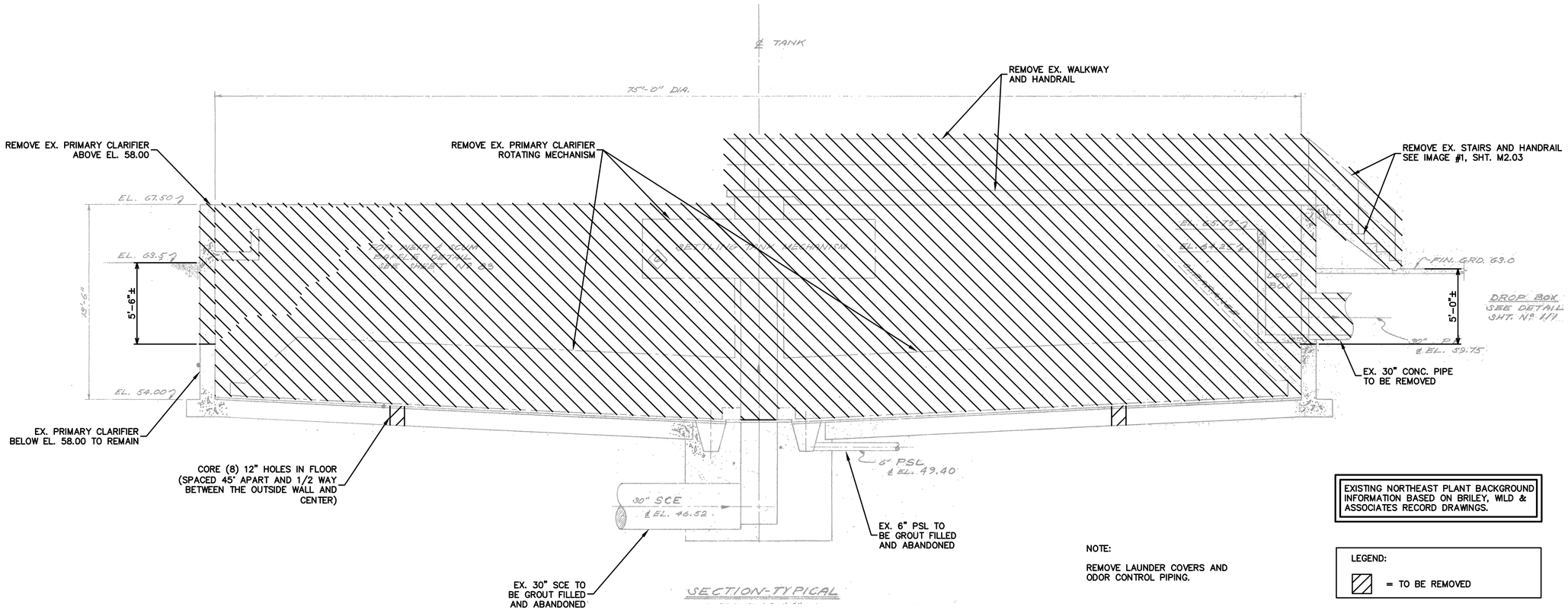

EXISTING NORTHEAST PLANT BACKGROUND INFORMATION BASED ON BRILEY, WILD & ASSOCIATES RECORD DRAWINGS.

NOTE:

REMOVE LAUNDER COVERS AND ODOR CONTROL PIPING.

LEGEND:

= TO BE REMOVED

BID DOCUMENTS

IF THIS BAR DOES NOT MEASURE 1" THEN DRAWING HAS BEEN REDUCED SCALE ACCORDINGLY 0 1"

King
ENGINEERING ASSOCIATES, INC.
4921 Memorial Highway
One Memorial Center, Suite 300
Tampa, Florida 33634
Phone 813 880-8881
Fax 813 880-8882
www.kingengineering.com
Engineering License #2610

RECORD DRAWINGS

SURVEYED BY: DRAWN BY:

REVIEWED BY: PROJECT ENGINEER DATE

APPROVED BY: ENGINEER DATE

REVISION	BY	DATE

CITY OF CLEARWATER, FLORIDA
ENGINEERING DEPARTMENT
100 S. MYRTLE AVE.
CLEARWATER, FL 33756

INVESTIGATE BEFORE YOU EXCAVATE
CALL 811
SUNSHINE STATE ONE CALL OF FLORIDA
www.callsunshine.com
(800) 432-4770
MIN. 48 HOURS BEFORE YOU EXCAVATE

NORTHEAST WRF GRIT REMOVAL, MOVING BELT FILTER AND EQUALIZATION SYSTEM IMPROVEMENTS

EX. PRIMARY CLARIFIER SECTION DEMO PLAN

DWG NAME: M2.01 – M2.05	FIELD BOOK:	SURVEYED BY:	SCALE: VERT. N/A
CONTRACT NO.: 15-0045-UT	DATE DRAWN: MARCH 2016	DRAWN BY: MJG	HORIZ. AS SHOWN
JOB NO.: 2110-210-002	DESIGNED BY: LVM	CHECKED BY: TAT	SHEET NO.: 64 of 117

APPROVED FOR CONSTRUCTION

© COPYRIGHT 2013 KING ENGINEERING ASSOCIATES, INC. DRAWINGS AND CONCEPTS MAY NOT BE USED OR REPRODUCED WITHOUT WRITTEN PERMISSION CONSENT IS HEREBY GRANTED SPECIFICALLY TO GOVERNMENTAL AGENCIES TO REPRODUCE THIS DOCUMENT IN COMPLIANCE WITH F.S. CHAPTER 119.

O:\ENV_ENG\2110\210\002\production\Drawings\M2.01 - M2.05.dwg, March 18, 2020 2:49 PM, King Engineering Associate Inc.

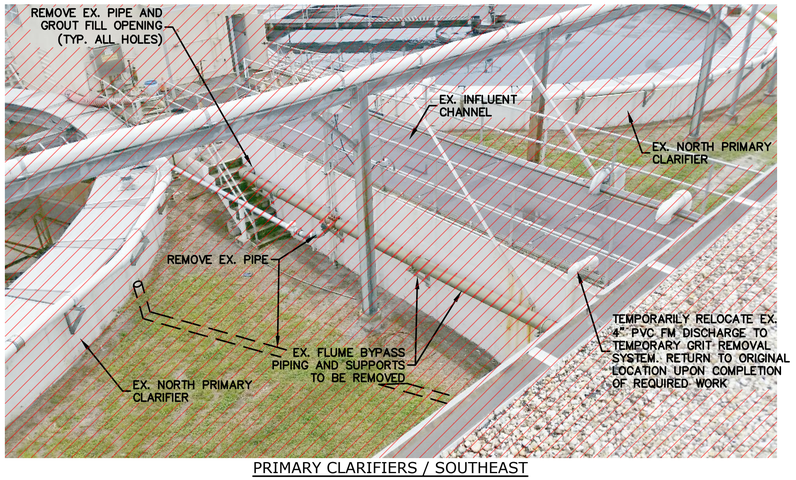

PRIMARY CLARIFIERS / SOUTHEAST

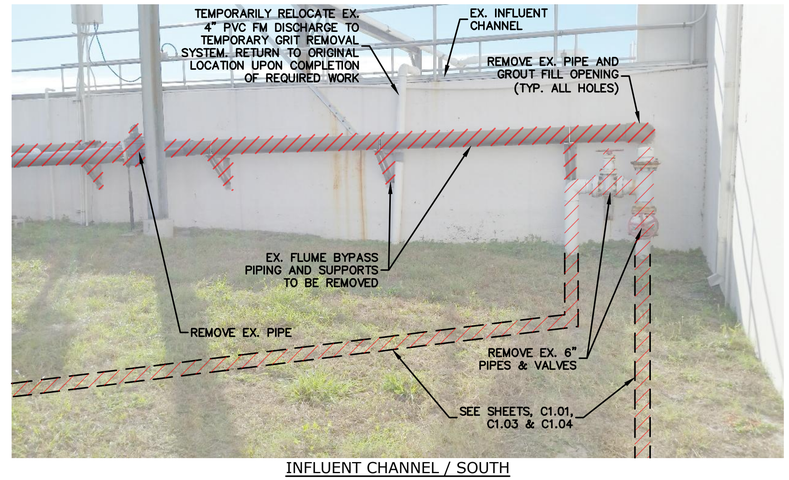

INFLUENT CHANNEL / SOUTH

LEGEND:

= TO BE REMOVED

IF THIS BAR DOES NOT MEASURE 1" THEN DRAWING HAS BEEN REDUCED SCALE ACCORDINGLY 0 1"

BID DOCUMENTS

King
ENGINEERING ASSOCIATES, INC.
4921 Memorial Highway
One Memorial Center, Suite 300
Tampa, Florida 33634
Phone 813 880-8881
Fax 813 880-8882
www.kingengineering.com
Engineering License #2610

RECORD DRAWINGS

SURVEYED BY: DRAWN BY:

REVIEWED BY: PROJECT ENGINEER DATE

APPROVED BY: ENGINEER DATE

REVISION	BY	DATE

CITY OF CLEARWATER, FLORIDA
ENGINEERING DEPARTMENT
100 S. MYRTLE AVE.
CLEARWATER, FL 33756

INVESTIGATE BEFORE YOU EXCAVATE
CALL 811
SUNSHINE STATE ONE CALL OF FLORIDA
www.callsunshine.com
(800) 432-4770
MIN. 48 HOURS BEFORE YOU EXCAVATE

NORTHEAST WRF GRIT REMOVAL, MOVING BELT FILTER AND EQUALIZATION SYSTEM IMPROVEMENTS

EX. PRIMARY CLARIFIER SECTION DEMO PLAN AND DETAILS

DWG NAME: M2.01 – M2.05	FIELD BOOK:	SURVEYED BY:	SCALE: VERT. N/A
CONTRACT NO.: 15-0045-UT	DATE DRAWN: MARCH 2016	DRAWN BY: CS	HORIZ. AS SHOWN
JOB NO.: 2110-210-002	DESIGNED BY: JEE	CHECKED BY: TAT	SHEET NO.: 65 of 117

APPROVED FOR CONSTRUCTION

© COPYRIGHT 2013 KING ENGINEERING ASSOCIATES, INC. DRAWINGS AND CONCEPTS MAY NOT BE USED OR REPRODUCED WITHOUT WRITTEN PERMISSION CONSENT IS HEREBY GRANTED SPECIFICALLY TO GOVERNMENTAL AGENCIES TO REPRODUCE THIS DOCUMENT IN COMPLIANCE WITH F.S. CHAPTER 119.

O:\ENV_ENG\2110\210\002\Production\Drawings\M2.01 - M2.05.dwg, March 26, 2020 3:10 PM, King Engineering Associate Inc.

M2.10

SEE C2.01 FOR CONTINUATION

NOTES:

1. SEE SEQUENCE OF CONSTRUCTION SPEC SECTION 01016.
2. ASSIST OWNER/ENGINEER WITH INSPECTION OF INTERIOR OF CHANNEL WHEN EXISTING 30" P.E. PIPES ARE REMOVED FROM EXISTING P.E. BOX CHANNEL.
3. BASED ON INSPECTION, OWNER/ENGINEER WILL DIRECT CONTRACTOR ON DEMOLITION AND REPAIRS TO BE MADE TO THE P.E. CHANNEL, IF ANY.
4. MODIFY EXISTING CONCRETE BOSSES AS REQUIRED TO CONNECT NEW 30" PIPES.
5. SEE SHEET M2.13 FOR PUMP BUILDING UPPER AND LOWER PLANS.
6. ALL MJ PIPE, MJ FITTINGS AND PRESSURE PIPES SHALL BE RESTRAINED.
7. TEMPORARILY EXTEND 6" DI LINE TO EXISTING THICKENER PUMP DISCHARGE HEADER (TO DIGESTER) UNTIL SOUTH CLARIFIER IS REMOVED AND NEW SLUDGE LINE IS PLACED IN SERVICE. SEE SHEETS M1.02, M1.04 AND SPEC SECTION 01016

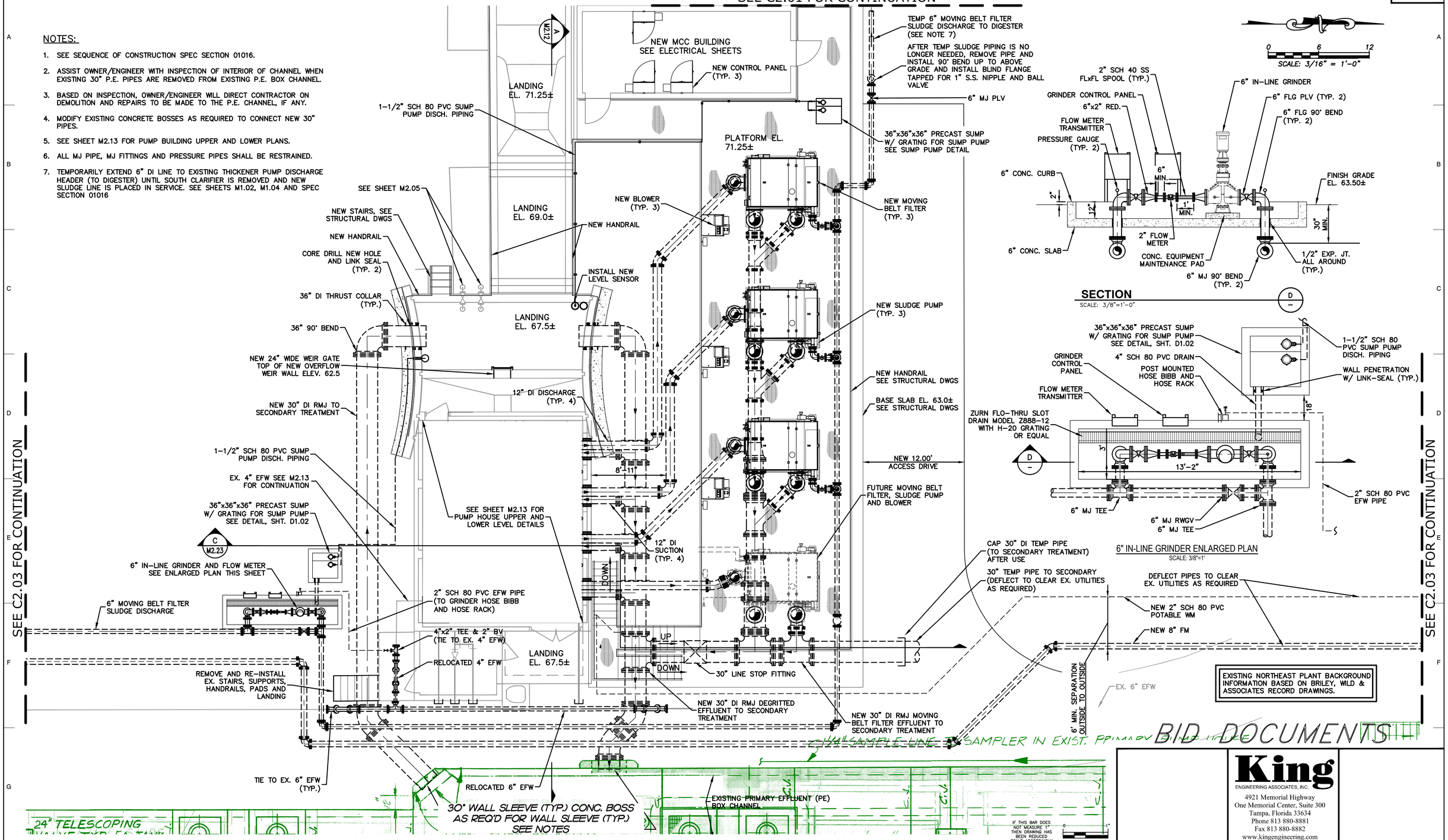

BID DOCUMENTS

King
ENGINEERING ASSOCIATES, INC.
4921 Memorial Highway
One Memorial Center, Suite 300
Tampa, Florida 33634
Phone 813 880-8881
Fax 813 880-8882
www.kingengineering.com
Engineering License #2610

RECORD DRAWINGS			
SURVEYED BY:	DRAWN BY:		
REVIEWED BY:			
PROJECT ENGINEER	DATE		
APPROVED BY:			
ENGINEER	DATE	REVISION	BY / DATE

CITY OF CLEARWATER, FLORIDA
ENGINEERING DEPARTMENT
100 S. MYRTLE AVE.
CLEARWATER, FL 33756

INVESTIGATE BEFORE YOU EXCAVATE
CALL 811
SUNSHINE STATE ONE CALL OF FLORIDA
www.callsunshine.com
(800) 432-4770
MIN. 48 HOURS BEFORE YOU EXCAVATE

NORTHEAST WRF GRIT REMOVAL, MOVING BELT FILTER AND EQUALIZATION SYSTEM IMPROVEMENTS

PUMP BUILDING AND MOVING BELT FILTER PLAN

DWG NAME: M2.10, M2.12 –	FIELD BOOK: M2.13	SURVEYED BY:	SCALE: VERT. N/A
CONTRACT NO.: 15-0045-UT	DATE DRAWN: MARCH 2016	DRAWN BY: MJG	HORIZ. AS SHOWN
JOB NO.: 2110-210-002	DESIGNED BY: LVM	CHECKED BY: TAT	SHEET NO.: 66 of 117
APPROVED FOR CONSTRUCTION			

SEE C2.01 FOR CONTINUATION

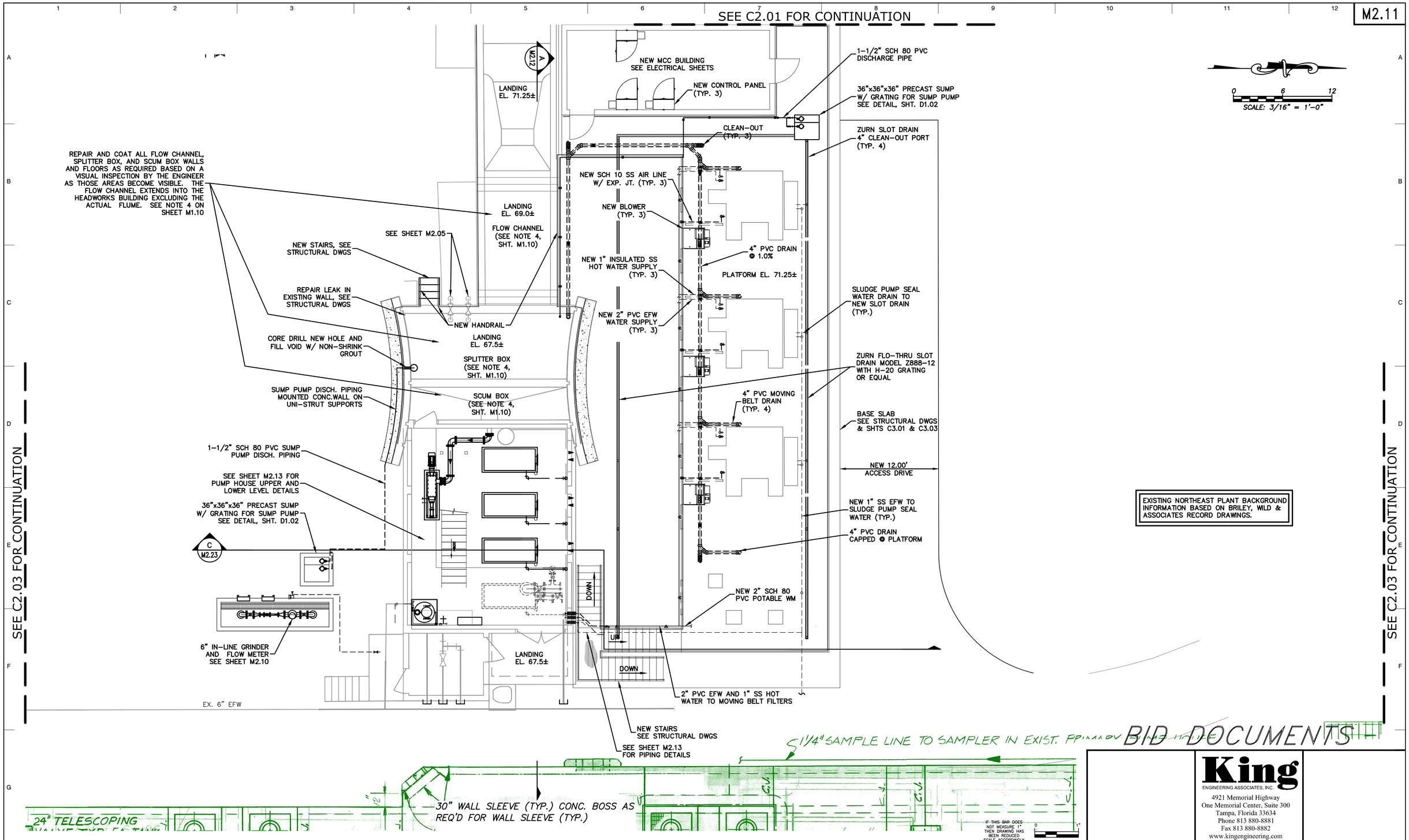

EXISTING NORTHEAST PLANT BACKGROUND INFORMATION BASED ON BRILEY, WILD & ASSOCIATES RECORD DRAWINGS.

SEE C2.03 FOR CONTINUATION

SEE C2.03 FOR CONTINUATION

BID DOCUMENTS

King
ENGINEERING ASSOCIATES, INC.
4921 Memorial Highway
One Memorial Center, Suite 300
Tampa, Florida 33634
Phone 813 880-8881
Fax 813 880-8882
www.kingengineering.com
Engineering License #2610

RECORD DRAWINGS			
SURVEYED BY:	DRAWN BY:		
REVIEWED BY:			
PROJECT ENGINEER	DATE		
APPROVED BY:			
ENGINEER	DATE	REVISION	BY / DATE

CITY OF CLEARWATER, FLORIDA
ENGINEERING DEPARTMENT
100 S. MYRTLE AVE.
CLEARWATER, FL 33756

INVESTIGATE BEFORE YOU EXCAVATE
CALL 811
SUNSHINE STATE ONE CALL OF FLORIDA
www.callsunshine.com
(800) 432-4770
MIN. 48 HOURS BEFORE YOU EXCAVATE

NORTHEAST WRF GRIT REMOVAL, MOVING BELT FILTER AND EQUALIZATION SYSTEM IMPROVEMENTS

PUMP BUILDING AND MOVING BELT FILTER WATER, AIR, DRAIN PIPING PLAN

DWG NAME: M2.11	FIELD BOOK:	SURVEYED BY:	SCALE: VERT. N/A
CONTRACT NO.: 15-0045-UT	DATE DRAWN: MARCH 2016	DRAWN BY: MJG	HORIZ. AS SHOWN
JOB NO.: 2110-210-002	DESIGNED BY: LVM	CHECKED BY: TAT	SHEET NO.: 67 of 117
APPROVED FOR CONSTRUCTION			

SCALE: 3/8" = 1'-0"

2" SCH 80 PVC EFW SPRAY WATER HEADER AROUND N, W, S SIDES OF SUMP. MOUNT SPRAYING SYSTEMS CO. NOZZLES:
- TEN (10) H3/8U 316 S.S. 8020 @ 24" C/C, @ 60° TO WATER SURFACE
- SEVEN (7) H3/8U 316 S.S. 2520 @ 36" C/C, @ 15° TO WATER SURFACE

5'-10 3/8" 2'-0" 3'-0" 10" 10"

EL. 71.25

EL. 67.84

66.00

10'-10 5/8" FIBERGLASS FLUME

SAND

4" PVC FILTER DRAIN @ 1.0% (FROM MOVING BELT FILTERS)

NEW PEDESTAL MOUNTED LEVEL TRANSMITTER

6"(TYP.)

EL. 69.00

℄ EL. 67.80

W.S. EL. 66.90

1-1/2" SCH. 40 S.S. SUMP PUMP DISCHARGE PIPING TO SPLITTER BOX

4" 90° BEND INV.=69.07

C/L EL. 67.25

REMOVE WALL TO ELEV. 62.5 FOR 24" SELF-CONTAINED WEIR GATE - PROVIDE NEW 3"L FOR EXISTING GRATING SUPPORT

CORE DRILL NEW HOLE AND SEAL W/ LINK-SEAL (TYP.)

EXTEND EXISTING SUMP PUMP DISCHARGE PIPING TO SPLITTER BOX

CORE DRILL OPENING FOR SUMP PUMP PIPING - SEAL WITH LINK-SEAL

2" B.V.

EL. 67.50

4" FLG 90° BEND

4" D.I. SCUM PUMP DISCHARGE

SCUM WELL

EL. 61.83

CORE DRILL NEW HOLE AND LINK-SEAL FOR NEW 30" PIPE

INFLUENT DISTRIBUTION PLUGGED

℄ 57.33

BOT. EL.= 56.33

12" CONC. CAP W/ WATER STOP SEE STRUCTURAL DWGS

BACKFILL W/ NO. 57 STONE

30" DEGRITTED EFFLUENT TO SECONDARY TREATMENT

10" RESTRAINED FL EXP. CPLG. (TYP. 3)

VENTILATOR FOR DETAILS SEE SHEET NO. 19

EL. 78.83

BRACKET (TYP)

2-3/4" Ø A.B. @ 6' O.C. (TYP)

3/4" Ø HANGER ROD (TYP)

3 1/4" GRAND GANTRY #4300 TARCH, OR EQUAL

8" RUNWAY - #4200 TARCH, OR EQUAL

MIN. EL. 73.00

HOIST - MINIMUM HOOK TRAVEL TO BE FROM EL. 73.00 TO EL. 56.00

ANGLE BACKET W/ STRAP PIPE SUPPORT (TYP.)

4" FLG 90° BEND

4" FLG CPLG. ADAPT.

3'-9" 5'-7" 5'-7" 5'-7"

4" PLV. (TYP. 3)

12" DI FLG DISCHARGE (TYP. 3)

2" SCH. 80 PVC EFW

12" DI BLIND FLG.

FUTURE SALSNES FEED PUMP

NEW SALSNES FEED PUMP (TYP. 3)

NEW CONC. EQUIPMENT MAINTENANCE PAD (TYP. 3)

ROUTE 3/4" SS SEAL WATER TO SALSNES FEED PUMP SEAL WATER CONNECTION (TYP. 3)

ROUTE 3/4" SS DRAIN TO EX. TRENCH DRAIN (TYP. 3)

SUMP PUMP - SEE DETAIL SHT 83

NEW 6" 90° DI BEND SCUM PUMP SUCTION

EX. SUMP (PUMP AND DISCHARGE PIPING NOT SHOWN)

EX. 6" PSL TO BE ABANDONED & GROUT FILLED

THRUST BLOCK (TYP.)

30" DI RMJ DEGRITTED EFFLUENT TO SECONDARY TREATMENT

EX. 6" PSC & PSL TO BE REMOVED AS NECESSARY

RELOCATED 6" EFW

6" MOVING BELT FILTER SLUDGE DISCHARGE

NEW 8" FM

6" MIN.

30" MIN.

℄ 57.83

EX. 6" EFW TO BE RELOCATED

TIE TO EX. CHANNEL PENETRATION AND SEAL WATER TIGHT

REHABILITATE CHANNEL SEE STRUCTURAL DWGS

1" INSULATED SS HOT WATER SUPPLY TO MOVING BELT FILTERS

2" SS EFW TO MOVING BELT FILTERS AND SLUDGE PUMPS

SS UNI-STRUT PIPE SUPPORT (TYP.)

1" SCH 80 PVC POTABLE WATER TO HOT WATER HEATER

BID DOCUMENTS

SECTION A / M2.10

SCALE: 3/8" = 1'-0"

EXISTING NORTHEAST PLANT BACKGROUND INFORMATION BASED ON BRILEY, WILD & ASSOCIATES RECORD DRAWINGS.

IF THIS BAR DOES NOT MEASURE 1" THEN DRAWING HAS BEEN REDUCED SCALE ACCORDINGLY

King
ENGINEERING ASSOCIATES, INC.
4921 Memorial Highway
One Memorial Center, Suite 300
Tampa, Florida 33634
Phone 813 880-8881
Fax 813 880-8882
www.kingengineering.com
Engineering License #2610

RECORD DRAWINGS
SURVEYED BY: DRAWN BY:
REVIEWED BY: PROJECT ENGINEER DATE
APPROVED BY: ENGINEER DATE

REVISION	BY	DATE

CITY OF CLEARWATER, FLORIDA
ENGINEERING DEPARTMENT
100 S. MYRTLE AVE.
CLEARWATER, FL 33756

INVESTIGATE BEFORE YOU EXCAVATE
CALL 811
SUNSHINE STATE ONE CALL OF FLORIDA
www.callsunshine.com
(800) 432-4770
MIN. 48 HOURS BEFORE YOU EXCAVATE

NORTHEAST WRF GRIT REMOVAL, MOVING BELT FILTER AND EQUALIZATION SYSTEM IMPROVEMENTS

PUMP BUILDING SECTION

DWG NAME: M2.10, M2.12 - M2.13	FIELD BOOK:	SURVEYED BY:	SCALE: VERT. N/A
CONTRACT NO.: 15-0045-UT	DATE DRAWN: MARCH 2016	DRAWN BY: MJG	HORIZ. AS SHOWN
JOB NO.: 2110-210-002	DESIGNED BY: LVM	CHECKED BY: TAT	SHEET NO.: 68 of 117

APPROVED FOR CONSTRUCTION

M2.13

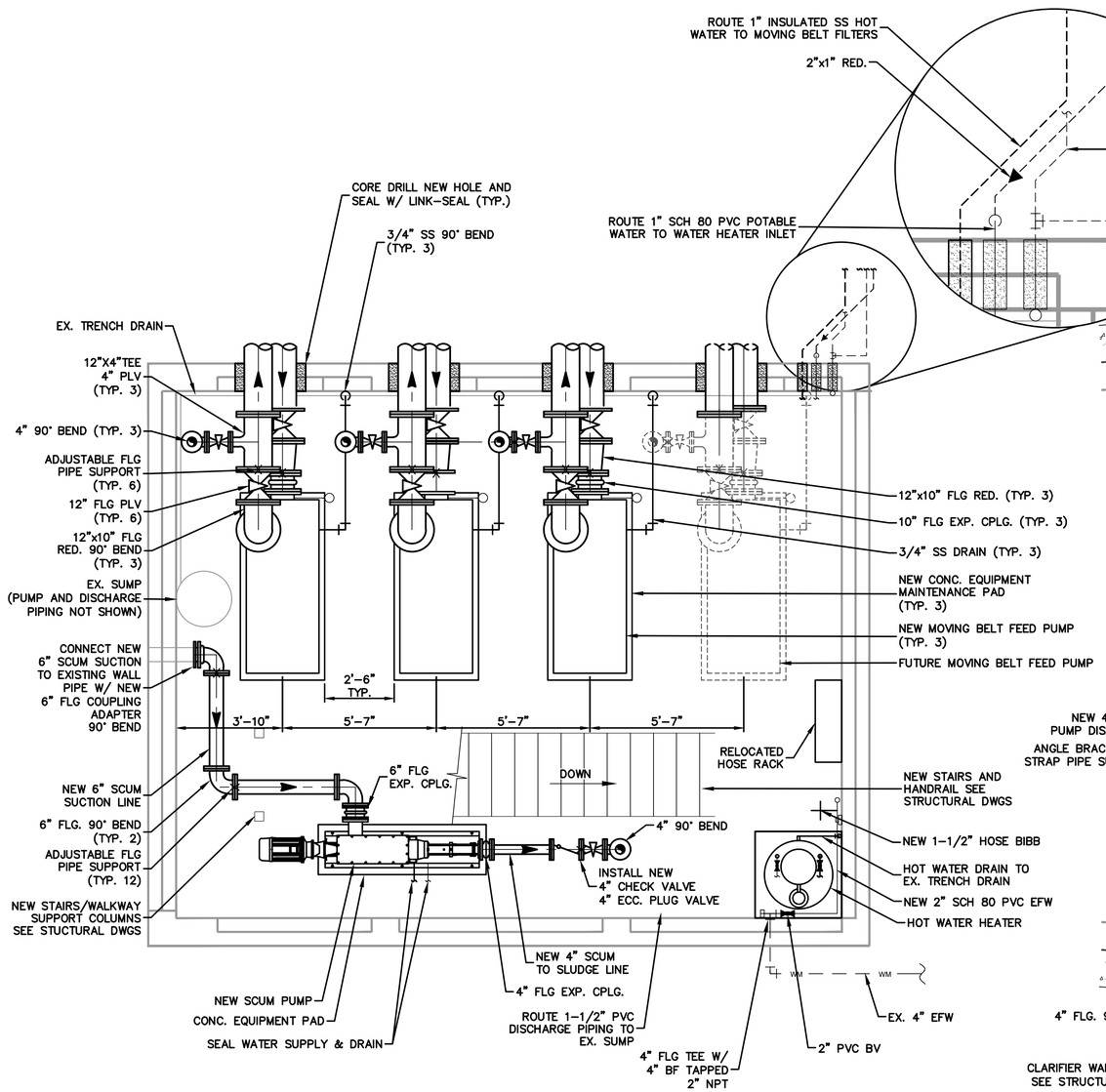

PUMP BLDG. LOWER LEVEL

SCALE: 3/8"=1'-0"

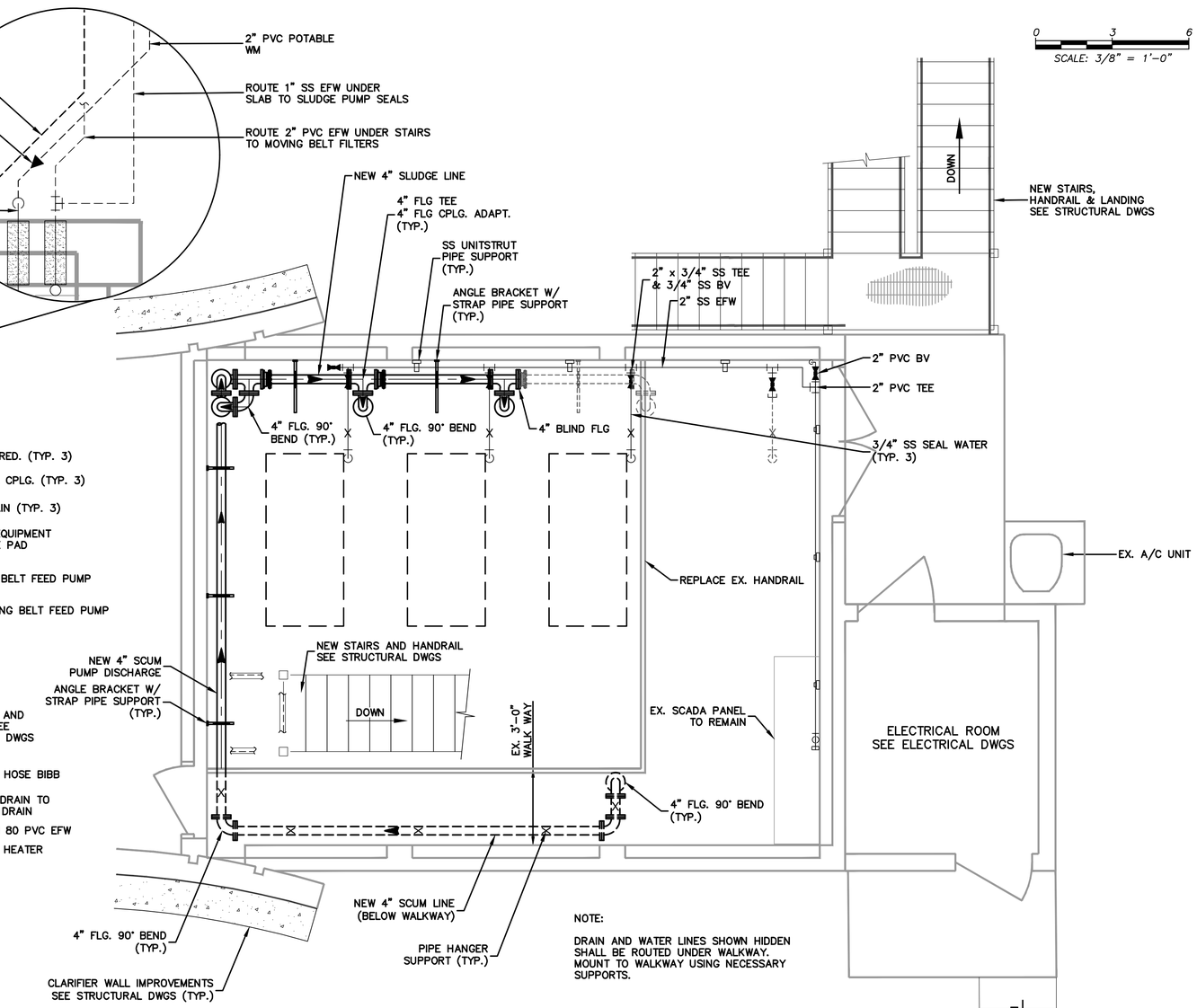

PUMP BLDG. UPPER LEVEL

SCALE: 3/8"=1'-0"

NOTE:

DRAIN AND WATER LINES SHOWN HIDDEN SHALL BE ROUTED UNDER WALKWAY. MOUNT TO WALKWAY USING NECESSARY SUPPORTS.

NOTE:

ALL PVC PIPE SHALL BE SCH 80 PVC.

BID DOCUMENTS

EXISTING NORTHEAST PLANT BACKGROUND INFORMATION BASED ON BRILEY, WILD & ASSOCIATES RECORD DRAWINGS.

IF THIS BAR DOES NOT MEASURE 1" THEN DRAWING HAS BEEN REDUCED SCALE ACCORDINGLY 0 1"

King
ENGINEERING ASSOCIATES, INC.
4921 Memorial Highway
One Memorial Center, Suite 300
Tampa, Florida 33634
Phone 813 880-8881
Fax 813 880-8882
www.kingengineering.com
Engineering License #2610

© COPYRIGHT 2010 KING ENGINEERING ASSOCIATES, INC. DRAWINGS AND CONCEPTS MAY NOT BE USED OR REPRODUCED WITHOUT WRITTEN PERMISSION CONSENT IS HEREBY GRANTED SPECIFICALLY TO GOVERNMENTAL AGENCIES TO REPRODUCE THIS DOCUMENT IN COMPLIANCE WITH F.S. CHAPTER 119.

O:\ENV_ENG\2110\210\002\production\Drawings\M2.10, M2.12 - M2.13.dwg, March 18, 2020 2:51 PM, King Engineering Associate Inc.

RECORD DRAWINGS

SURVEYED BY: | DRAWN BY:

REVIEWED BY: PROJECT ENGINEER DATE

APPROVED BY: ENGINEER DATE

REVISION	BY	DATE

CITY OF CLEARWATER, FLORIDA
ENGINEERING DEPARTMENT
100 S. MYRTLE AVE.
CLEARWATER, FL 33756

INVESTIGATE BEFORE YOU EXCAVATE
CALL 811
SUNSHINE STATE ONE CALL OF FLORIDA
www.callsunshine.com
(800) 432-4770
MIN. 48 HOURS BEFORE YOU EXCAVATE

NORTHEAST WRF GRIT REMOVAL, MOVING BELT FILTER AND EQUALIZATION SYSTEM IMPROVEMENTS

PUMP BUILDING UPPER LEVEL AND LOWER LEVEL

DWG NAME: M2.10, M2.12 - M2.13	FIELD BOOK:	SURVEYED BY:	SCALE: VERT. N/A
CONTRACT NO.: 15-0045-UT	DATE DRAWN: MARCH 2016	DRAWN BY: MJG	HORIZ. AS SHOWN
JOB NO.: 2110-210-002	DESIGNED BY: LVM	CHECKED BY: TAT	SHEET NO.: 69 of 117

APPROVED FOR CONSTRUCTION

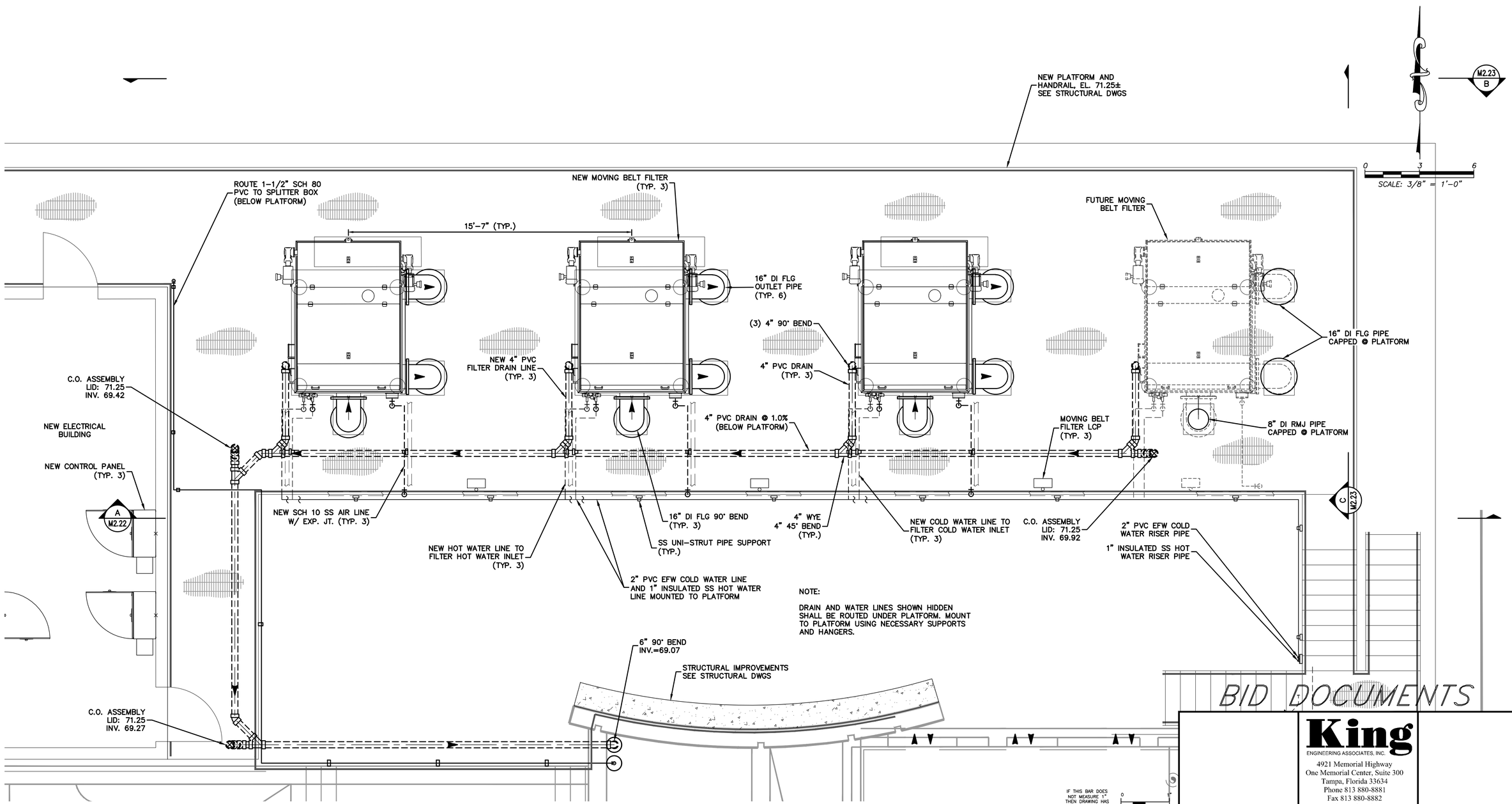

King
ENGINEERING ASSOCIATES, INC.
4921 Memorial Highway
One Memorial Center, Suite 300
Tampa, Florida 33634
Phone 813 880-8881
Fax 813 880-8882
www.kingengineering.com
Engineering License #2610

RECORD DRAWINGS

SURVEYED BY: | DRAWN BY:
REVIEWED BY: PROJECT ENGINEER | DATE
APPROVED BY: ENGINEER | DATE

REVISION	BY	DATE

CITY OF CLEARWATER, FLORIDA
ENGINEERING DEPARTMENT
100 S. MYRTLE AVE.
CLEARWATER, FL 33756

INVESTIGATE BEFORE YOU EXCAVATE
CALL 811
SUNSHINE STATE ONE CALL OF FLORIDA
www.callsunshine.com
(800) 432-4770
MIN. 48 HOURS BEFORE YOU EXCAVATE

NORTHEAST WRF GRIT REMOVAL, MOVING BELT FILTER AND EQUALIZATION SYSTEM IMPROVEMENTS

MOVING BELT FILTER ENLARGED UPPER LEVEL PLAN

DWG NAME: M2.20–M2.23	FIELD BOOK:	SURVEYED BY:	SCALE: VERT. N/A
CONTRACT NO.: 15–0045–UT	DATE DRAWN: MARCH 2016	DRAWN BY: MJG	HORIZ. AS SHOWN
JOB NO.: 2110–210–002	DESIGNED BY: LVM	CHECKED BY: TAT	SHEET NO.: 70 of 117

APPROVED FOR CONSTRUCTION

© COPYRIGHT 2010 KING ENGINEERING ASSOCIATES, INC. DRAWINGS AND CONCEPTS MAY NOT BE USED OR REPRODUCED WITHOUT WRITTEN PERMISSION. CONSENT IS HEREBY GRANTED SPECIFICALLY TO GOVERNMENTAL AGENCIES TO REPRODUCE THIS DOCUMENT IN COMPLIANCE WITH F.S. CHAPTER 119.

O:\ENV_ENG\2110\210\002\production\Drawings\M2.20-M2.23.dwg, March 18, 2020 2:52 PM, King Engineering Associate Inc.

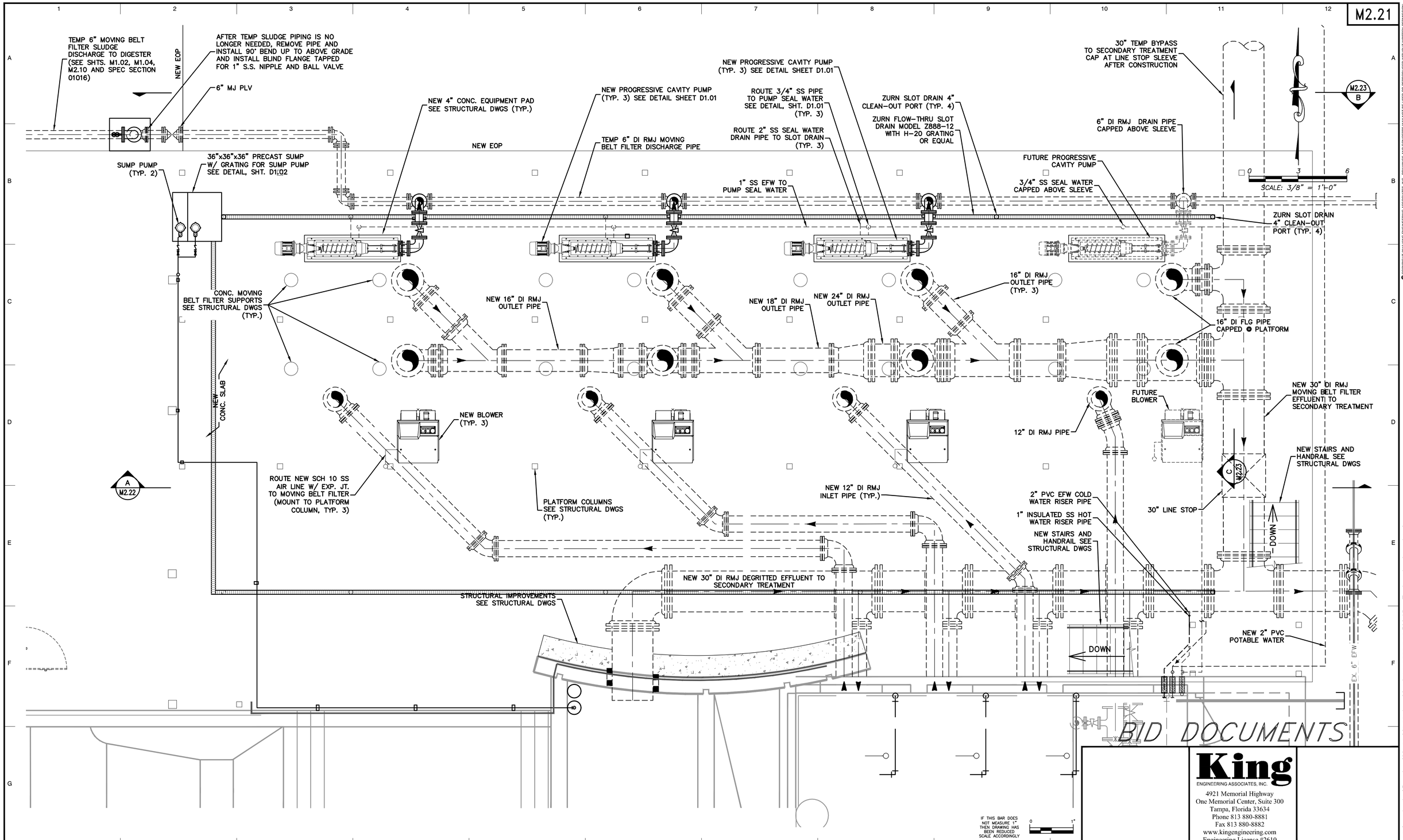

King
ENGINEERING ASSOCIATES, INC.
4921 Memorial Highway
One Memorial Center, Suite 300
Tampa, Florida 33634
Phone 813 880-8881
Fax 813 880-8882
www.kingengineering.com
Engineering License #2610

© COPYRIGHT 2010 KING ENGINEERING ASSOCIATES, INC. DRAWINGS AND CONCEPTS MAY NOT BE USED OR REPRODUCED WITHOUT WRITTEN PERMISSION CONSENT IS HEREBY GRANTED SPECIFICALLY TO GOVERNMENTAL AGENCIES TO REPRODUCE THIS DOCUMENT IN COMPLIANCE WITH F.S. CHAPTER 119.

O:\ENV_ENG\2110\210\002\production\Drawings\M2.20-M2.23.dwg, March 18, 2020 2:52 PM, King Engineering Associate Inc.

RECORD DRAWINGS

SURVEYED BY: | DRAWN BY:
REVIEWED BY: PROJECT ENGINEER | DATE
APPROVED BY: ENGINEER | DATE

REVISION	BY	DATE

CITY OF CLEARWATER, FLORIDA
ENGINEERING DEPARTMENT
100 S. MYRTLE AVE.
CLEARWATER, FL 33756

INVESTIGATE BEFORE YOU EXCAVATE
CALL 811
SUNSHINE STATE ONE CALL OF FLORIDA
www.callsunshine.com
(800) 432-4770
MIN. 48 HOURS BEFORE YOU EXCAVATE

NORTHEAST WRF GRIT REMOVAL, MOVING BELT FILTER AND EQUALIZATION SYSTEM IMPROVEMENTS

MOVING BELT FILTER ENLARGED LOWER LEVEL PLAN

DWG NAME: M2.20-M2.23	FIELD BOOK:	SURVEYED BY:	SCALE: VERT. N/A
CONTRACT NO.: 15-0045-UT	DATE DRAWN: MARCH 2016	DRAWN BY: MJG	HORIZ. AS SHOWN
JOB NO.: 2110-210-002	DESIGNED BY: LVM	CHECKED BY: TAT	SHEET NO.: 71 of 117

APPROVED FOR CONSTRUCTION

SCALE: 3/8" = 1'-0"

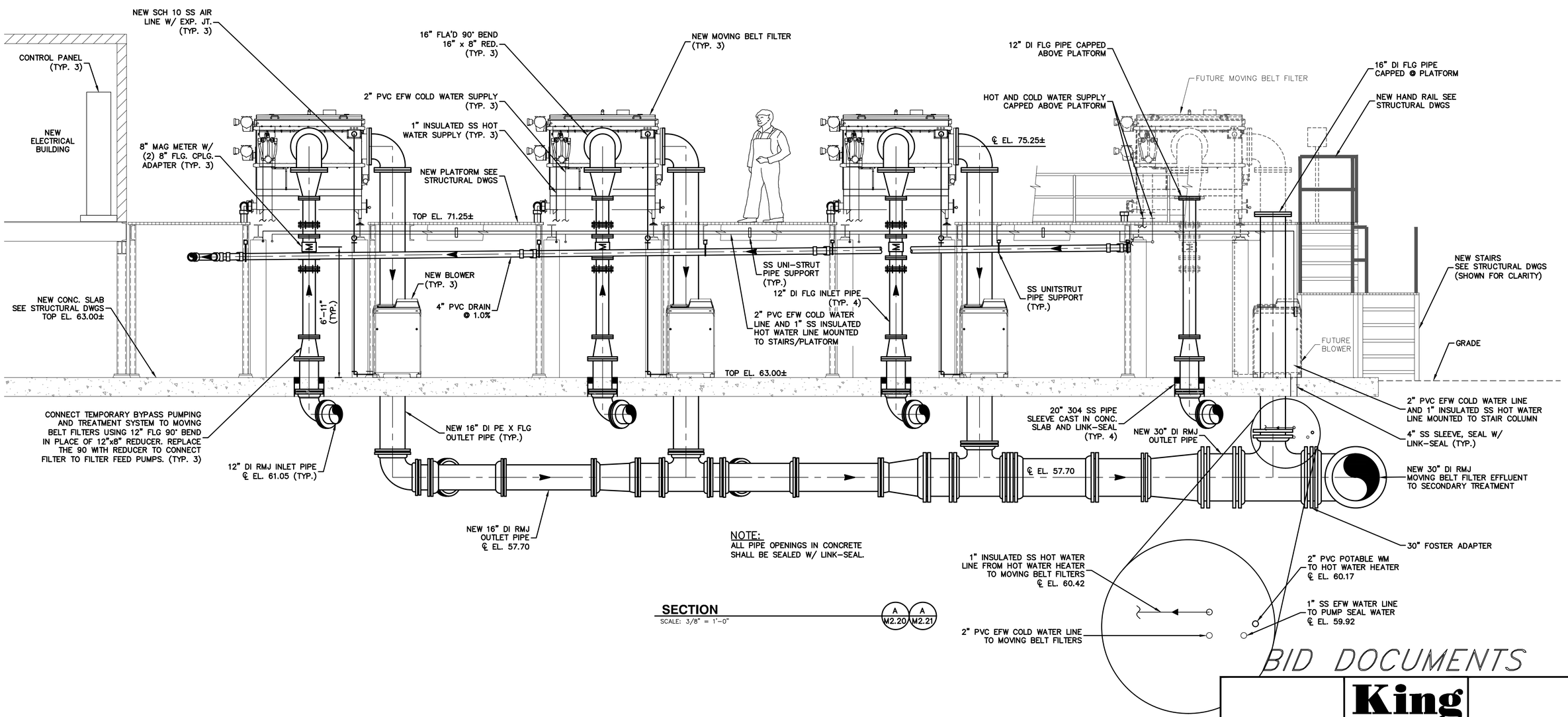

NOTE:
ALL PIPE OPENINGS IN CONCRETE SHALL BE SEALED W/ LINK-SEAL.

SECTION A/M2.20 A/M2.21
SCALE: 3/8" = 1'-0"

BID DOCUMENTS

IF THIS BAR DOES NOT MEASURE 1" THEN DRAWING HAS BEEN REDUCED SCALE ACCORDINGLY

King
ENGINEERING ASSOCIATES, INC.
4921 Memorial Highway
One Memorial Center, Suite 300
Tampa, Florida 33634
Phone 813 880-8881
Fax 813 880-8882
www.kingengineering.com
Engineering License #2610

© COPYRIGHT 2010 KING ENGINEERING ASSOCIATES, INC. DRAWINGS AND CONCEPTS MAY NOT BE USED OR REPRODUCED WITHOUT WRITTEN PERMISSION CONSENT IS HEREBY GRANTED SPECIFICALLY TO GOVERNMENTAL AGENCIES TO REPRODUCE THIS DOCUMENT IN COMPLIANCE WITH F.S. CHAPTER 119.

RECORD DRAWINGS
SURVEYED BY: DRAWN BY:
REVIEWED BY: PROJECT ENGINEER DATE
APPROVED BY: ENGINEER DATE

REVISION	BY	DATE

CITY OF CLEARWATER, FLORIDA
ENGINEERING DEPARTMENT
100 S. MYRTLE AVE.
CLEARWATER, FL 33756

INVESTIGATE BEFORE YOU EXCAVATE
CALL 811
SUNSHINE STATE ONE CALL OF FLORIDA
www.callsunshine.com
(800) 432-4770
MIN. 48 HOURS BEFORE YOU EXCAVATE

NORTHEAST WRF GRIT REMOVAL, MOVING BELT FILTER AND EQUALIZATION SYSTEM IMPROVEMENTS

MOVING BELT FILTER SECTION

DWG NAME: M2.20-M2.23	FIELD BOOK:	SURVEYED BY:	SCALE: VERT. N/A
CONTRACT NO.: 15-0045-UT	DATE DRAWN: MARCH 2016	DRAWN BY: MJG	HORIZ. AS SHOWN
JOB NO.: 2110-210-002	DESIGNED BY: LVM	CHECKED BY: TAT	SHEET NO.: 72 of 117

APPROVED FOR CONSTRUCTION

O:\ENV_ENG\2110\210\002\production\Drawings\M2.20-M2.23.dwg, March 18, 2020 2:52 PM, King Engineering Associate Inc.

M2.23

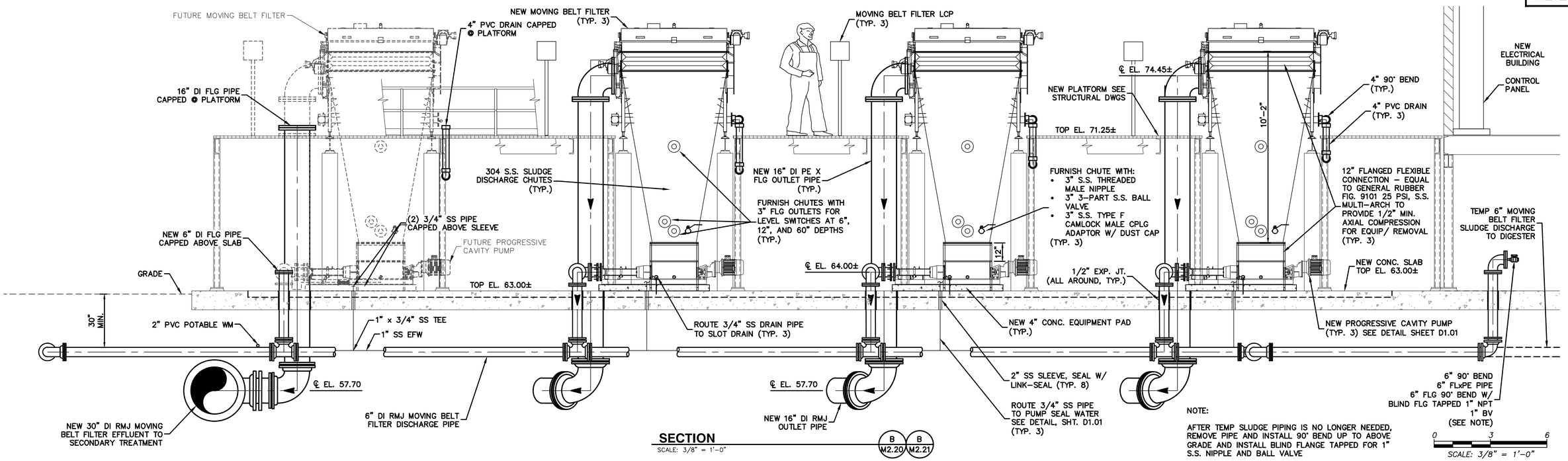

NOTE:
AFTER TEMP SLUDGE PIPING IS NO LONGER NEEDED, REMOVE PIPE AND INSTALL 90° BEND UP TO ABOVE GRADE AND INSTALL BLIND FLANGE TAPPED FOR 1" S.S. NIPPLE AND BALL VALVE

SECTION

SCALE: 3/8" = 1'-0"

B M2.20 B M2.21

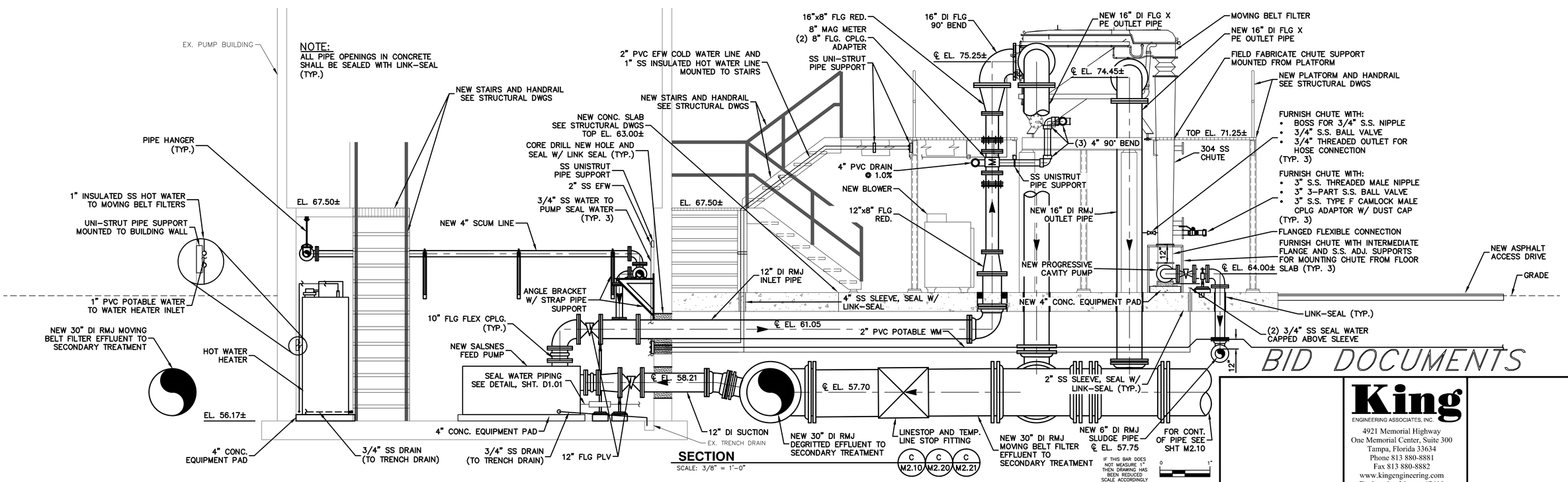

SECTION

SCALE: 3/8" = 1'-0"

BID DOCUMENTS

King
ENGINEERING ASSOCIATES, INC.
4921 Memorial Highway
One Memorial Center, Suite 300
Tampa, Florida 33634
Phone 813 880-8881
Fax 813 880-8882
www.kingengineering.com
Engineering License #2610

© COPYRIGHT KING ENGINEERING ASSOCIATES, INC. DRAWINGS AND CONCEPTS MAY NOT BE USED OR REPRODUCED WITHOUT WRITTEN PERMISSION. CONSENT IS HEREBY GRANTED SPECIFICALLY TO GOVERNMENTAL AGENCIES TO REPRODUCE THIS DOCUMENT IN COMPLIANCE WITH F.S. CHAPTER 119.

RECORD DRAWINGS			
SURVEYED BY:	DRAWN BY:		
REVIEWED BY:			
PROJECT ENGINEER	DATE		
APPROVED BY:			
ENGINEER	DATE	REVISION	BY / DATE

CITY OF CLEARWATER, FLORIDA
ENGINEERING DEPARTMENT
100 S. MYRTLE AVE.
CLEARWATER, FL 33756

INVESTIGATE BEFORE YOU EXCAVATE
CALL 811
SUNSHINE STATE ONE CALL OF FLORIDA
www.callsunshine.com
(800) 432-4770
MIN. 48 HOURS BEFORE YOU EXCAVATE

NORTHEAST WRF GRIT REMOVAL, MOVING BELT FILTER AND EQUALIZATION SYSTEM IMPROVEMENTS

PUMP BUILDING AND SALSNES FILTER SECTION

DWG NAME: M2.20–M2.23	FIELD BOOK:	SURVEYED BY:	SCALE: VERT. N/A
CONTRACT NO.: 15–0045–UT	DATE DRAWN: MARCH 2016	DRAWN BY: MJG	HORIZ. AS SHOWN
JOB NO.: 2110–210–002	DESIGNED BY: LVM	CHECKED BY: TAT	SHEET NO.: 73 of 117

APPROVED FOR CONSTRUCTION

O:\ENV_ENG\2110\210\002\production\Drawings\M2.20-M2.23.dwg, March 18, 2020 2:52 PM, King Engineering Associate Inc.

LEGEND:

= TO BE REMOVED

EXISTING NORTHEAST PLANT BACKGROUND INFORMATION BASED ON BRILEY, WILD & ASSOCIATES RECORD DRAWINGS.

ENTIRE SPLITTER BOX, PUMPS, PIPING AND ELECTRICAL TO BE REMOVED SEE IMAGES # 1–3, SHT. M3.02

LIMITS OF NEW EQ TANK (SHOWN FOR CLARITY, SEE NOTE 1)

ENTIRE IRRIGATION TANK, STAIRS, WALKWAY, PIPING, EQUIPMENT AND ELECTRICAL TO BE REMOVED

ENTIRE CONTROL BUILDING, BLOWERS, PIPING AND ELECTRICAL TO BE REMOVED SEE IMAGES # 4 & 5, SHT. M3.02

EXISTING TANK AND NEW TANK OVER EXCAVATED AREA (SEE NOTE 2)

ENTIRE IRRIGATION TANK, STAIRS, WALKWAY AND PIPING TO BE REMOVED

EX. IRRIGATION PUMPS AND PIPING TO BE REMOVED SEE DETAIL, SHT. M3.02

LIMITS OF NEW EQ TANK (SHOWN FOR CLARITY, SEE NOTE 1)

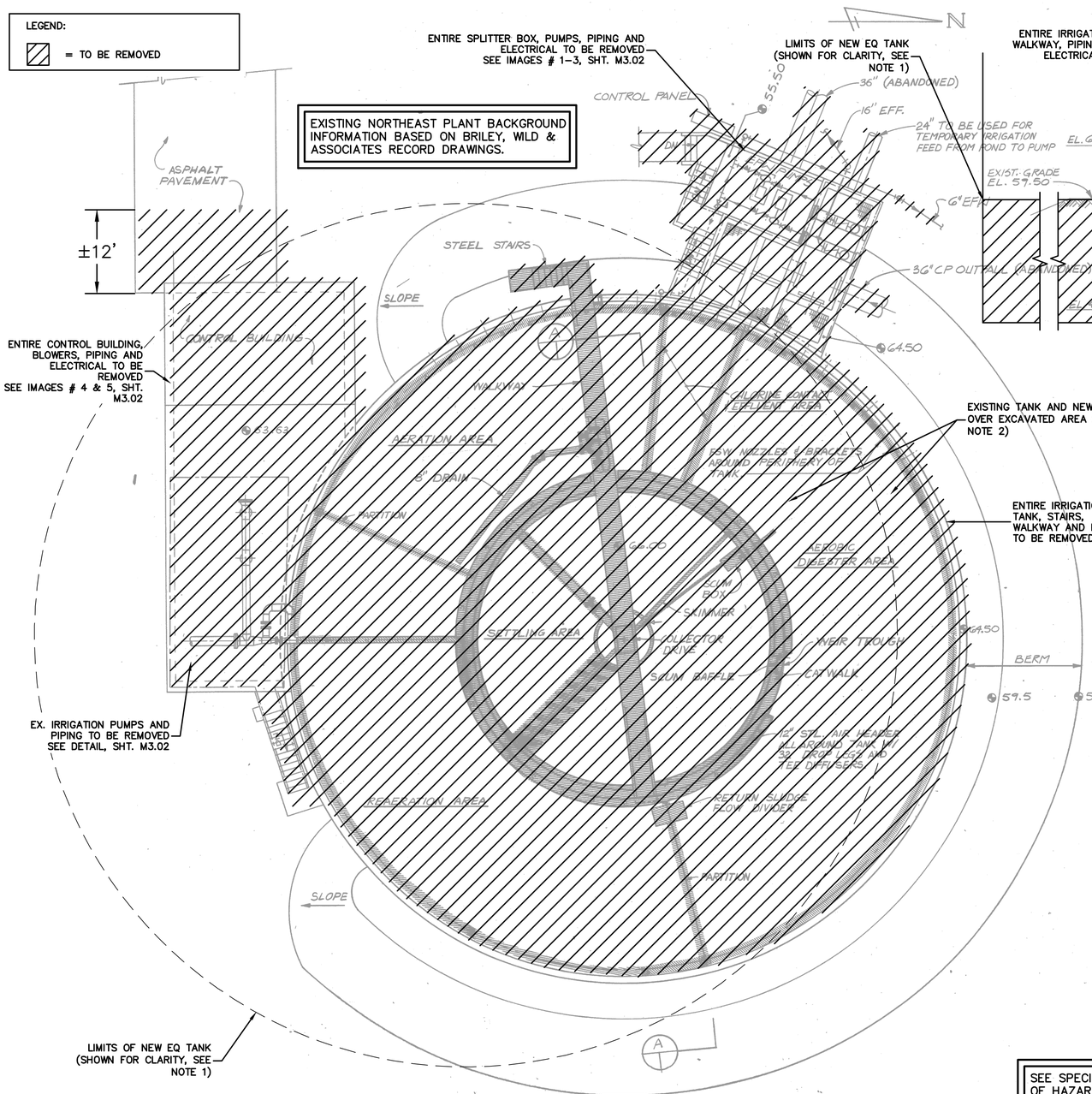

SEE C1.04 FOR CONTINUATION

PLAN

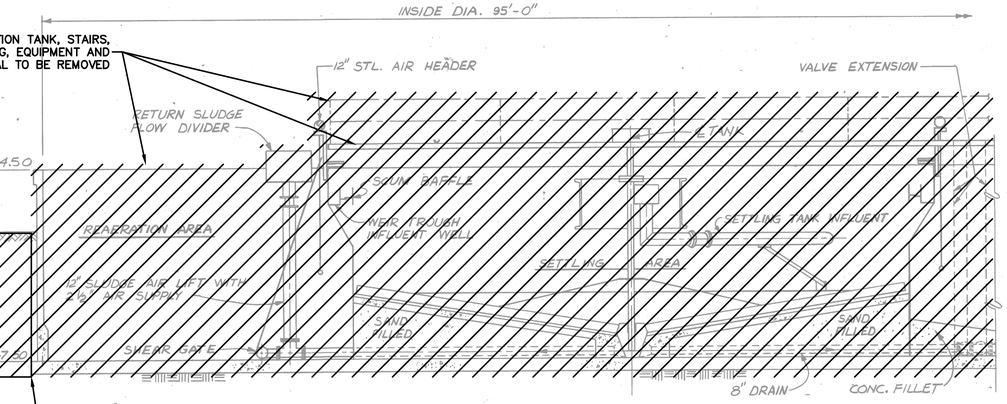

NOTE:
REMOVE ALL TANK INTERNALS INCLUDING MECHANISM, SLOPED CONC. CENTER AREA, SAND FILL, PIPING, WALKWAY, HANDRAIL, SPRAY HEADERS, CATWALK, CONC. FILLET IN EFFL. AREA & ANY OTHER APPURTENANCES WITHIN TANK WALLS.

NOTES:

1. CONTRACTOR TO OVER EXCAVATE UNDER FOOT PRINT OF NEW EQ TANK TO BELOW INVERT OF EX. IRRIGATION TANK.
2. CONTRACTOR TO BACKFILL EXISTING TANK AND OVER EXCAVATED AREA UNDER NEW EQ TANK CONCURRENTLY SEE GEOTECHNICAL REPORT.

SECTION A

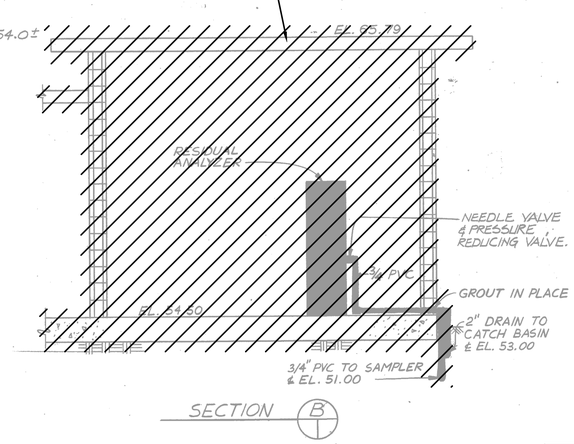

SECTION B

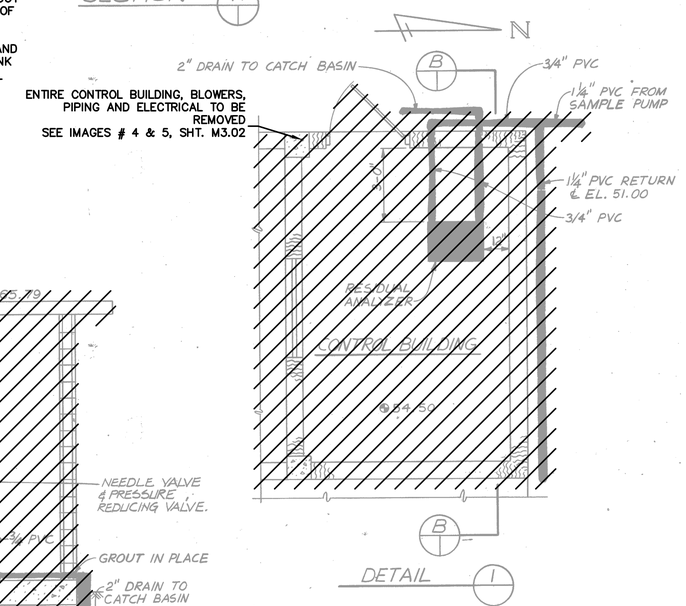

DETAIL 1

SEE SPECIFICATIONS FOR DISPOSAL OF HAZARDOUS MATERIALS

BID DOCUMENTS

IF THIS BAR DOES NOT MEASURE 1" THEN DRAWING HAS BEEN REDUCED SCALE ACCORDINGLY

King
ENGINEERING ASSOCIATES, INC.
4921 Memorial Highway
One Memorial Center, Suite 300
Tampa, Florida 33634
Phone 813 880-8881
Fax 813 880-8882
www.kingengineering.com
Engineering License #2610

RECORD DRAWINGS
SURVEYED BY: DRAWN BY:
REVIEWED BY: PROJECT ENGINEER DATE
APPROVED BY: ENGINEER DATE

REVISION	BY	DATE

CITY OF CLEARWATER, FLORIDA
ENGINEERING DEPARTMENT
100 S. MYRTLE AVE.
CLEARWATER, FL 33756

INVESTIGATE BEFORE YOU EXCAVATE
CALL 811
SUNSHINE STATE ONE CALL OF FLORIDA
www.callsunshine.com
(800) 432-4770
MIN. 48 HOURS BEFORE YOU EXCAVATE

NORTHEAST WRF GRIT REMOVAL, MOVING BELT FILTER AND EQUALIZATION SYSTEM IMPROVEMENTS

IRRIGATION TANK DEMO PLAN

DWG NAME: M1.01 – M1.06 AND M3.01 – M3.03	FIELD BOOK:	SURVEYED BY:	SCALE: VERT. N/A
CONTRACT NO.: 15-0045-UT	DATE DRAWN: MARCH 2016	DRAWN BY: MJG	HORIZ. AS SHOWN
JOB NO.: 2110-210-002	DESIGNED BY: LVM	CHECKED BY: TAT	SHEET NO.: 74 of 117

APPROVED FOR CONSTRUCTION

© COPYRIGHT 2010 KING ENGINEERING ASSOCIATES, INC. DRAWINGS AND CONCEPTS MAY NOT BE USED OR REPRODUCED WITHOUT WRITTEN PERMISSION. CONSENT IS HEREBY GRANTED SPECIFICALLY TO GOVERNMENTAL AGENCIES TO REPRODUCE THIS DOCUMENT IN COMPLIANCE WITH F.S. CHAPTER 119.

O:\ENV_ENG\2110\210\002\production\Drawings\M1.01 - M1.06 and M3.01 - M3.03.dwg, March 18, 2020 2:52 PM, King Engineering Associate Inc.

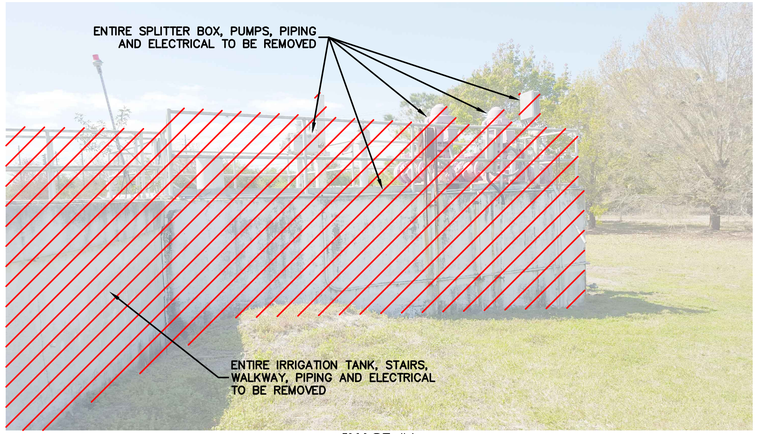

IMAGE #1

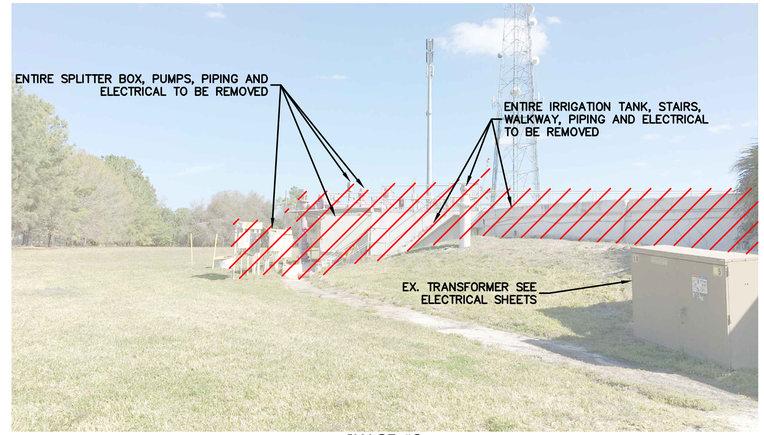

IMAGE #2

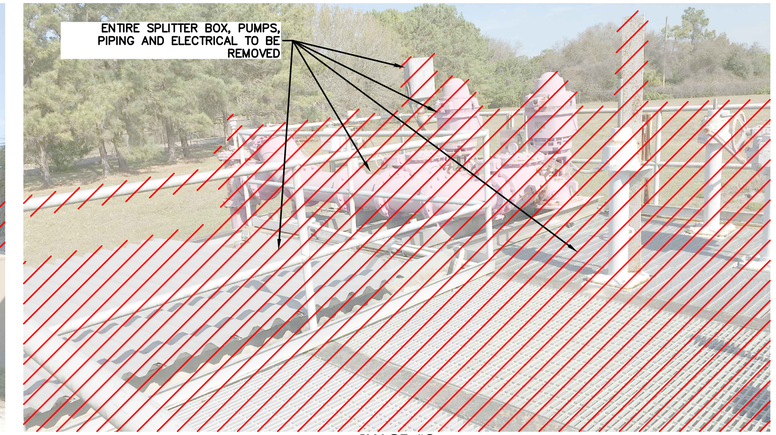

IMAGE #3

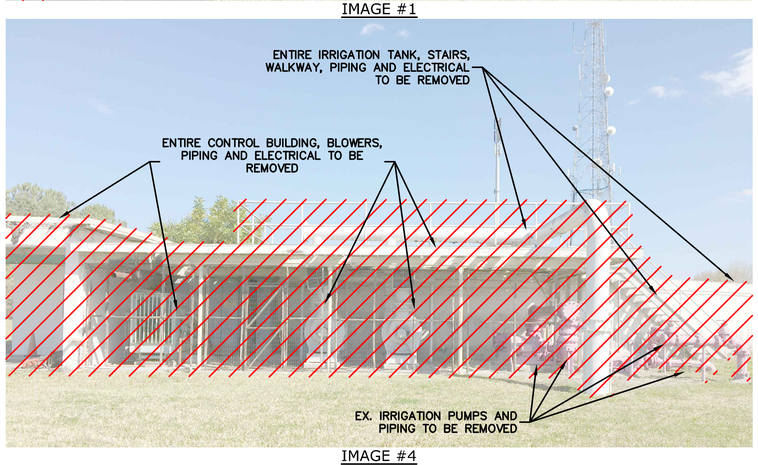

IMAGE #4

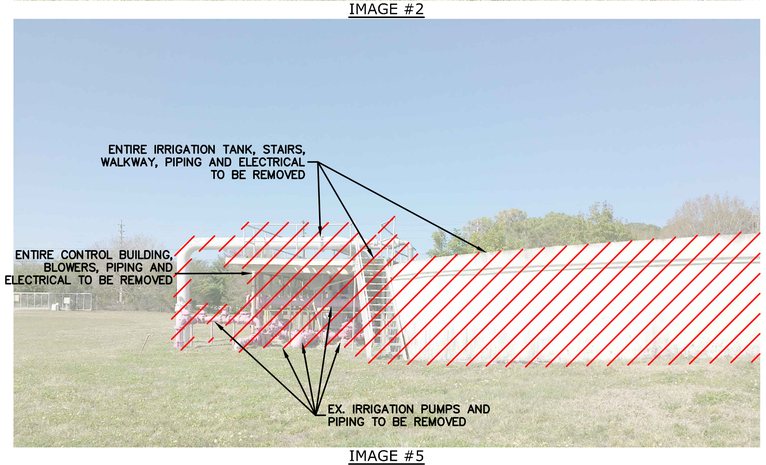

IMAGE #5

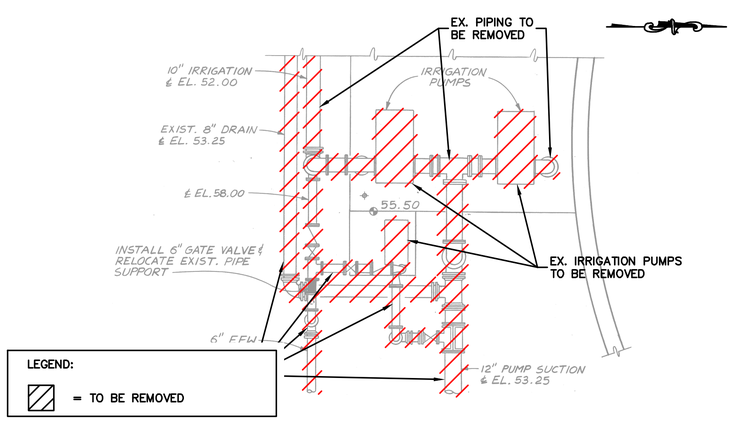

EXISTING PUMP DETAIL

BID DOCUMENTS

IF THIS BAR DOES NOT MEASURE 1" THEN DRAWING HAS BEEN REDUCED SCALE ACCORDINGLY

King
ENGINEERING ASSOCIATES, INC.
4921 Memorial Highway
One Memorial Center, Suite 300
Tampa, Florida 33634
Phone 813 880-8881
Fax 813 880-8882
www.kingengineering.com
Engineering License #2610

RECORD DRAWINGS

SURVEYED BY: | DRAWN BY:
REVIEWED BY: PROJECT ENGINEER | DATE
APPROVED BY: ENGINEER | DATE

REVISION	BY	DATE

CITY OF CLEARWATER, FLORIDA
ENGINEERING DEPARTMENT
100 S. MYRTLE AVE.
CLEARWATER, FL 33756

INVESTIGATE BEFORE YOU EXCAVATE
CALL 811
SUNSHINE STATE ONE CALL OF FLORIDA
www.callsunshine.com
(800) 432-4770
MIN. 48 HOURS BEFORE YOU EXCAVATE

NORTHEAST WRF GRIT REMOVAL, MOVING BELT FILTER AND EQUALIZATION SYSTEM IMPROVEMENTS

IRRIGATION TANK DEMO PLAN DETAILS

DWG NAME: M1.01 – M1.06	FIELD BOOK: AND M3.01 – M3.03	SURVEYED BY:	SCALE: VERT. N/A
CONTRACT NO.: 15-0045-UT	DATE DRAWN: MARCH 2016	DRAWN BY: MJG	HORIZ. AS SHOWN
JOB NO.: 2110-210-002	DESIGNED BY: LVM	CHECKED BY: TAT	SHEET NO.: 75 of 117

APPROVED FOR CONSTRUCTION

© COPYRIGHT 2010 KING ENGINEERING ASSOCIATES, INC. DRAWINGS AND CONCEPTS MAY NOT BE USED OR REPRODUCED WITHOUT WRITTEN PERMISSION. CONSENT IS HEREBY GRANTED SPECIFICALLY TO GOVERNMENTAL AGENCIES TO REPRODUCE THIS DOCUMENT IN COMPLIANCE WITH F.S. CHAPTER 119.

O:\ENV_ENG\2110\210\002\production\Drawings\M1.01 - M1.06 and M3.01 - M3.03.dwg, March 18, 2020 2:52 PM, King Engineering Associate Inc.

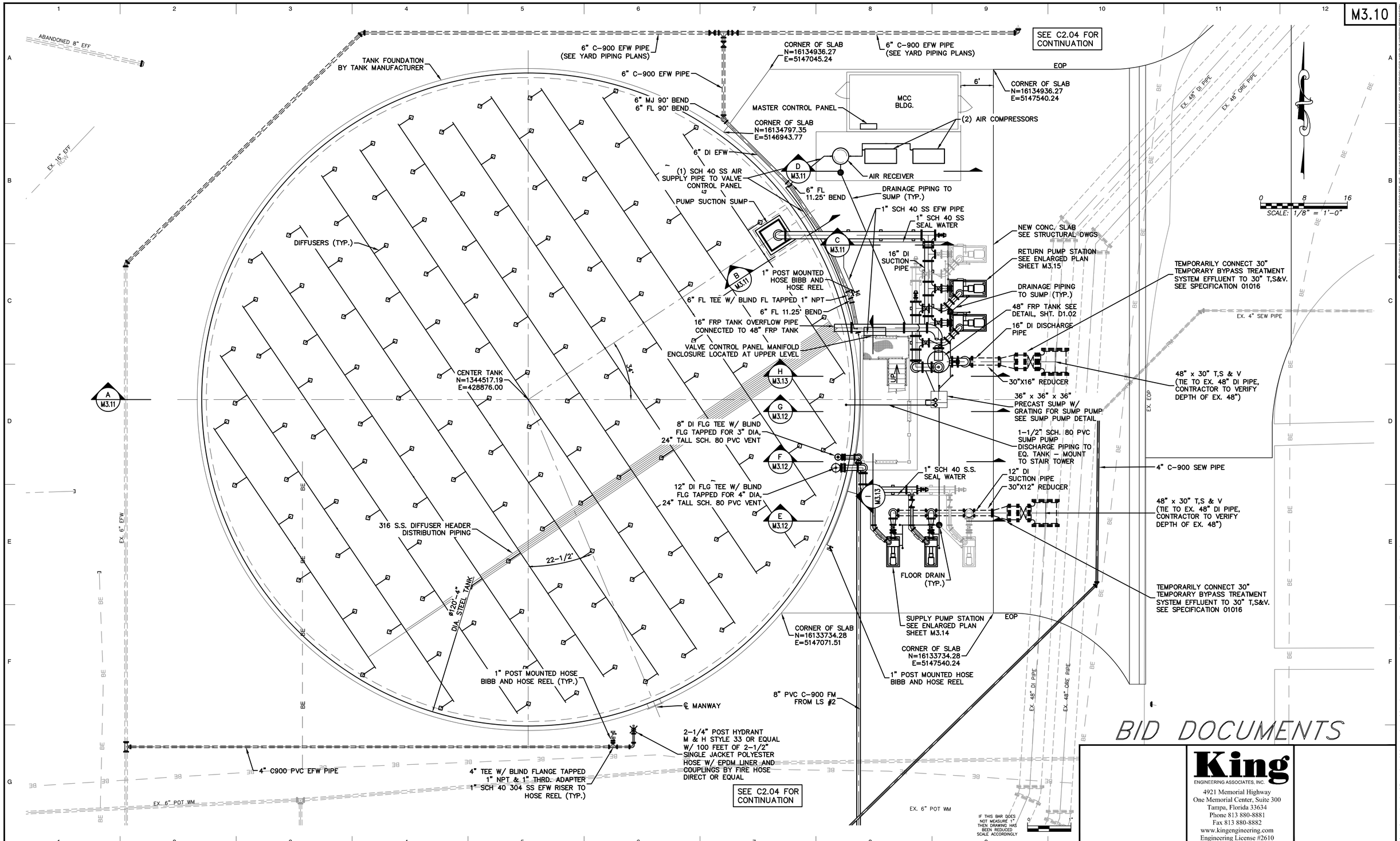

BID DOCUMENTS

King
ENGINEERING ASSOCIATES, INC.
4921 Memorial Highway
One Memorial Center, Suite 300
Tampa, Florida 33634
Phone 813 880-8881
Fax 813 880-8882
www.kingengineering.com
Engineering License #2610

© COPYRIGHT 2010 KING ENGINEERING ASSOCIATES, INC. DRAWINGS AND CONCEPTS MAY NOT BE USED OR REPRODUCED WITHOUT WRITTEN PERMISSION. CONSENT IS HEREBY GRANTED SPECIFICALLY TO GOVERNMENTAL AGENCIES TO REPRODUCE THIS DOCUMENT IN COMPLIANCE WITH F.S. CHAPTER 119.

O:\ENV_ENG\2110\210\002\production\Drawings\M3.10.dwg, March 18, 2020 2:53 PM, King Engineering Associate Inc.

RECORD DRAWINGS

SURVEYED BY:	DRAWN BY:
REVIEWED BY:	
PROJECT ENGINEER	DATE
APPROVED BY:	
ENGINEER	DATE

REVISION	BY	DATE

CITY OF CLEARWATER, FLORIDA
ENGINEERING DEPARTMENT
100 S. MYRTLE AVE.
CLEARWATER, FL 33756

INVESTIGATE BEFORE YOU EXCAVATE
CALL 811
SUNSHINE STATE ONE CALL OF FLORIDA
www.callsunshine.com
(800) 432-4770
MIN. 48 HOURS BEFORE YOU EXCAVATE

NORTHEAST WRF GRIT REMOVAL, MOVING BELT FILTER AND EQUALIZATION SYSTEM IMPROVEMENTS

EQUALIZATION TANK GENERAL ARRANGEMENT & SITE PLAN

DWG NAME: M3.10	FIELD BOOK:	SURVEYED BY:	SCALE: VERT. N/A
CONTRACT NO.: 15-0045-UT	DATE DRAWN: MARCH 2016	DRAWN BY: MJG	HORIZ. AS SHOWN
JOB NO.: 2110-210-002	DESIGNED BY: LVM	CHECKED BY: TAT	SHEET NO.: 76 of 117

APPROVED FOR CONSTRUCTION

NOTE:
RISER PIPING TO BE LOCATED ADJACENT TO STAIR STRUCTURE FOR SUPPORT

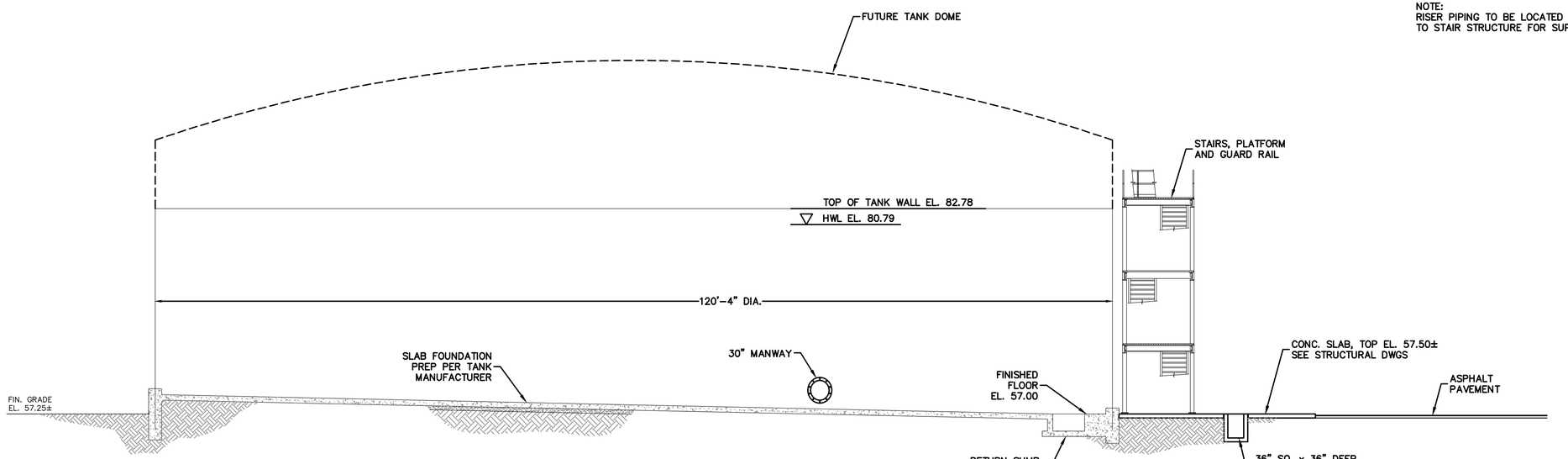

SECTION (ROTATED FOR CLARITY) A / M3.10
SCALE: 1/8"=1'-0"

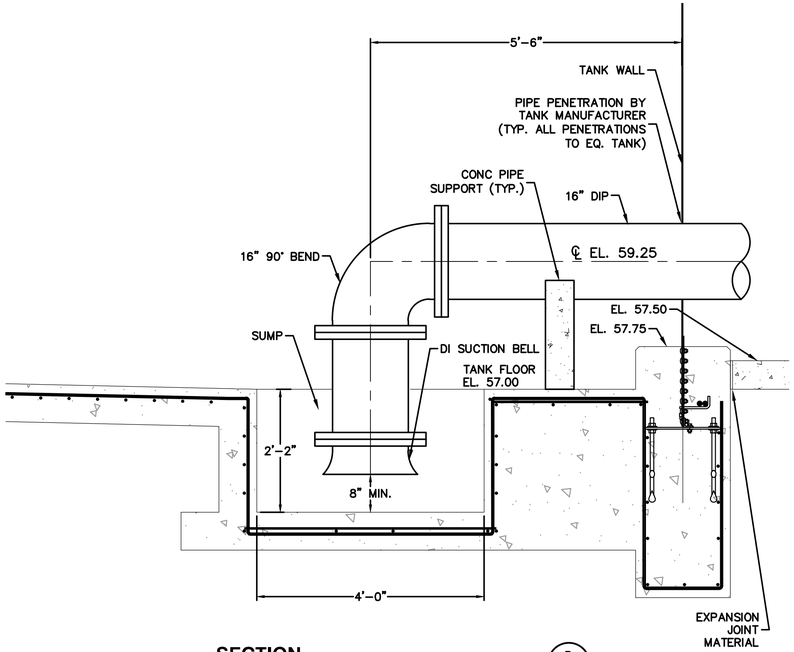

SECTION B / M3.10
SCALE: 3/4"=1'-0"

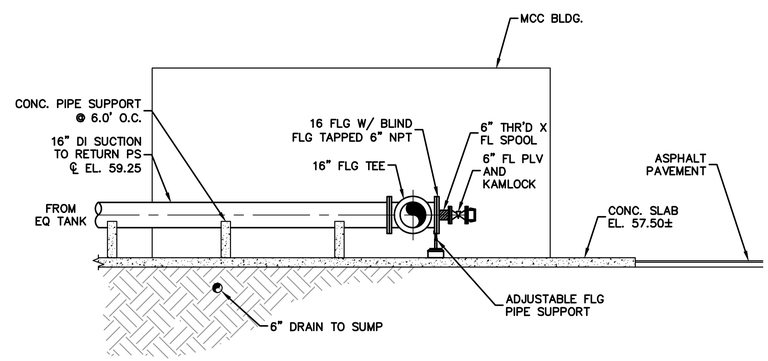

SECTION C / M3.10
SCALE: 1/4"=1'-0"

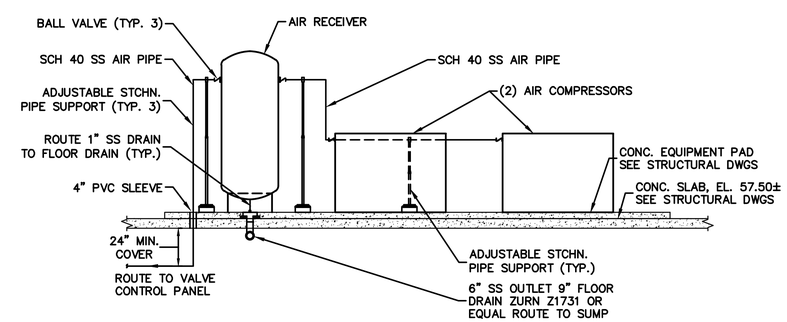

SECTION D / M3.10
SCALE: 1/4"=1'-0"

BID DOCUMENTS

IF THIS BAR DOES NOT MEASURE 1" THEN DRAWING HAS BEEN REDUCED SCALE ACCORDINGLY 0 1"

King
ENGINEERING ASSOCIATES, INC.
4921 Memorial Highway
One Memorial Center, Suite 300
Tampa, Florida 33634
Phone 813 880-8881
Fax 813 880-8882
www.kingengineering.com
Engineering License #2610

RECORD DRAWINGS
SURVEYED BY: DRAWN BY:
REVIEWED BY: PROJECT ENGINEER DATE
APPROVED BY: ENGINEER DATE

REVISION	BY	DATE

CITY OF CLEARWATER, FLORIDA
ENGINEERING DEPARTMENT
100 S. MYRTLE AVE.
CLEARWATER, FL 33756

INVESTIGATE BEFORE YOU EXCAVATE
CALL 811
SUNSHINE STATE ONE CALL OF FLORIDA
www.callsunshine.com
(800) 432-4770
MIN. 48 HOURS BEFORE YOU EXCAVATE

NORTHEAST WRF GRIT REMOVAL, MOVING BELT FILTER AND EQUALIZATION SYSTEM IMPROVEMENTS

EQUALIZATION TANK SECTIONS A, B, C & D

DWG NAME: M3.11	FIELD BOOK:	SURVEYED BY:	SCALE: VERT. N/A
CONTRACT NO.: 15-0045-UT	DATE DRAWN: MARCH 2016	DRAWN BY: MJG	HORIZ. AS SHOWN
JOB NO.: 2110-210-002	DESIGNED BY: LVM	CHECKED BY: TAT	SHEET NO.: 77 of 117

APPROVED FOR CONSTRUCTION

© COPYRIGHT 2010 KING ENGINEERING ASSOCIATES, INC. DRAWINGS AND CONCEPTS MAY NOT BE USED OR REPRODUCED WITHOUT WRITTEN PERMISSION. CONSENT IS HEREBY GRANTED SPECIFICALLY TO GOVERNMENTAL AGENCIES TO REPRODUCE THIS DOCUMENT IN COMPLIANCE WITH F.S. CHAPTER 119.

O:\ENV_ENG\2110\210\002\production\Drawings\M3.11-M3.15.dwg, March 18, 2020 2:53 PM, King Engineering Associate Inc.

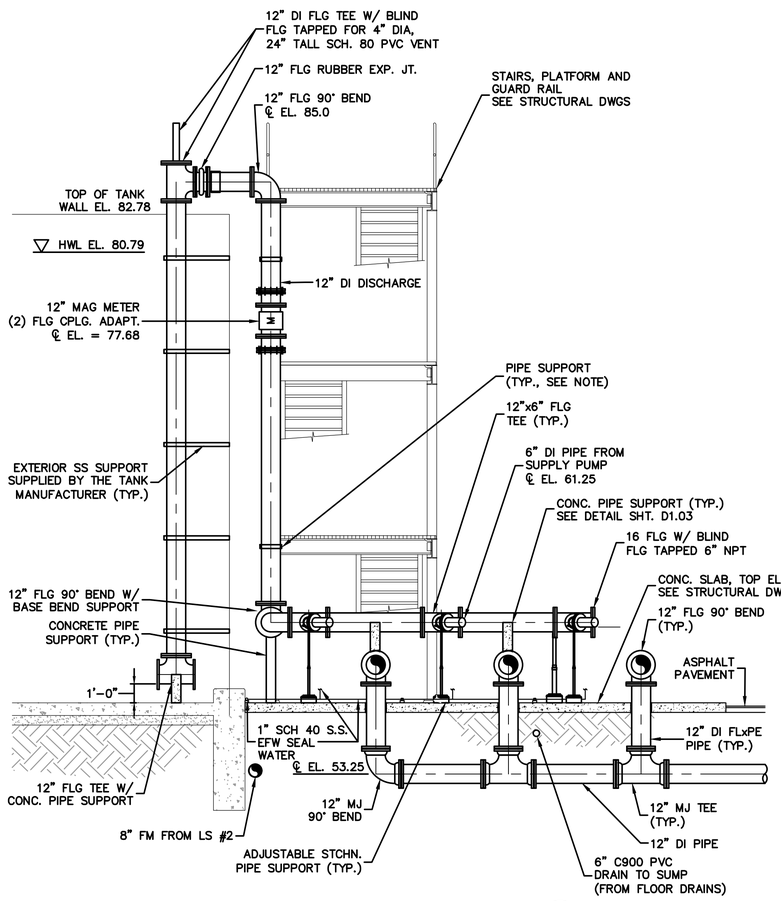

SECTION E M3.10
SCALE: 1/4"=1'-0"

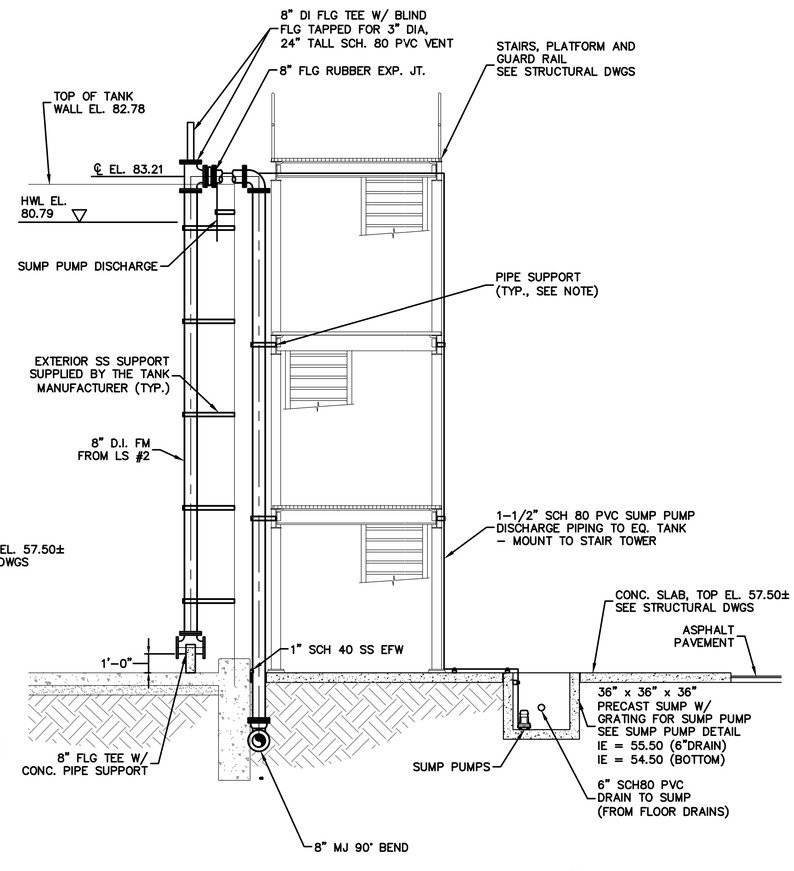

SECTION F M3.10
SCALE: 1/4"=1'-0"

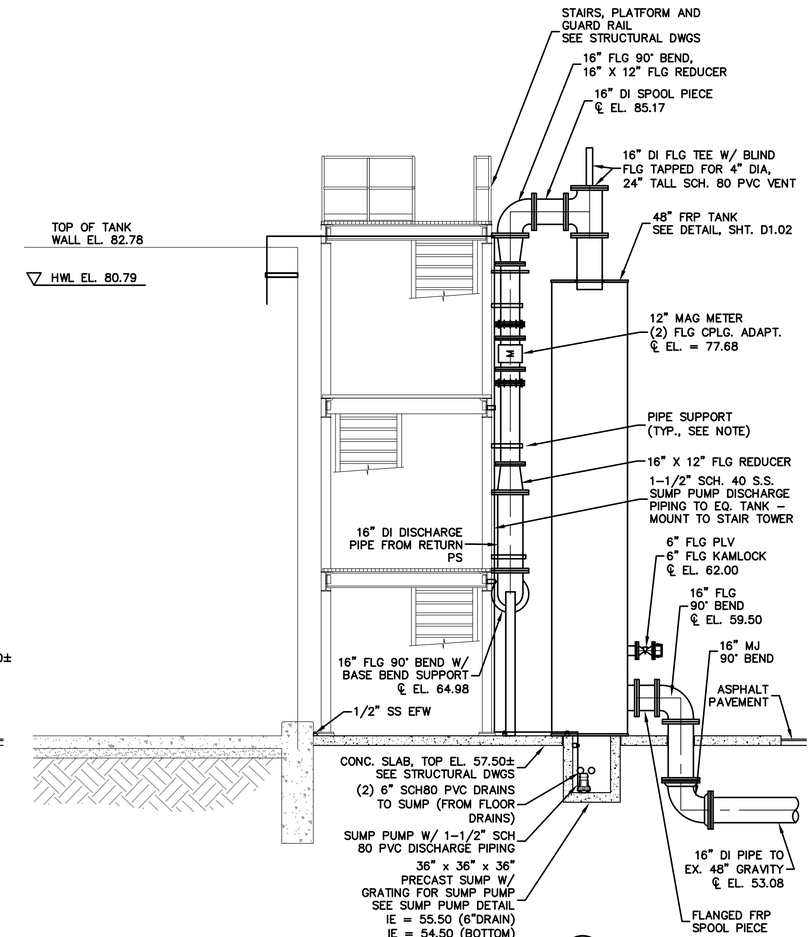

SECTION G M3.10
SCALE: 1/4"=1'-0"

BID DOCUMENTS

NOTE:

ALL U/G DI PIPING SHALL
BE RESTRAINED

NOTES:

1. RISER PIPING TO BE LOCATED ADJACENT TO AND BRACED TO STAIR STRUCTURE FOR SUPPORT.
2. ALL MJ PIPE, MJ FITTINGS AND PRESSURE PIPES SHALL BE RESTRAINED.

IF THIS BAR DOES NOT MEASURE 1" THEN DRAWING HAS BEEN REDUCED SCALE ACCORDINGLY 0 1"

King
ENGINEERING ASSOCIATES, INC.
4921 Memorial Highway
One Memorial Center, Suite 300
Tampa, Florida 33634
Phone 813 880-8881
Fax 813 880-8882
www.kingengineering.com
Engineering License #2610

RECORD DRAWINGS
SURVEYED BY: DRAWN BY:
REVIEWED BY: PROJECT ENGINEER DATE
APPROVED BY: ENGINEER DATE

REVISION	BY	DATE

CITY OF CLEARWATER, FLORIDA
ENGINEERING DEPARTMENT
100 S. MYRTLE AVE.
CLEARWATER, FL 33756

INVESTIGATE BEFORE YOU EXCAVATE
CALL 811
SUNSHINE STATE ONE CALL OF FLORIDA
www.callsunshine.com
(800) 432-4770
MIN. 48 HOURS BEFORE YOU EXCAVATE

NORTHEAST WRF GRIT REMOVAL, MOVING BELT FILTER AND EQUALIZATION SYSTEM IMPROVEMENTS

EQUALIZATION TANK SECTIONS E, F & G

DWG NAME: M3.11	FIELD BOOK:	SURVEYED BY:	SCALE: VERT. N/A
CONTRACT NO.: 15-0045-UT	DATE DRAWN: MARCH 2016	DRAWN BY: MJG	HORIZ. AS SHOWN
JOB NO.: 2110-210-002	DESIGNED BY: LVM	CHECKED BY: TAT	SHEET NO.: 78 of 117

APPROVED FOR CONSTRUCTION

© COPYRIGHT 2010 KING ENGINEERING ASSOCIATES, INC. DRAWINGS AND CONCEPTS MAY NOT BE USED OR REPRODUCED WITHOUT WRITTEN PERMISSION. CONSENT IS HEREBY GRANTED SPECIFICALLY TO GOVERNMENTAL AGENCIES TO REPRODUCE THIS DOCUMENT IN COMPLIANCE WITH F.S. CHAPTER 119.

O:\ENV_ENG\2110\210\002\production\Drawings\M3.11-M3.15.dwg, March 18, 2020 2:53 PM, King Engineering Associate Inc.

NOTES:

1. RISER PIPING TO BE LOCATED ADJACENT TO AND BRACED TO STAIR STRUCTURE FOR SUPPORT.
2. CONTRACTOR TO FURNISH AND INSTALL ALL SUPPORTS AND MOUNTING HARDWARE REQUIRED TO PROPERLY INSTALL VALVE CONTROL PANEL TO EXTERIOR OF STAIR STRUCTURE. SUBMIT DETAIL FOR ENGINEER'S APPROVAL.
3. ALL MJ PIPE, MJ FITTINGS AND PRESSURE PIPES SHALL BE RESTRAINED.

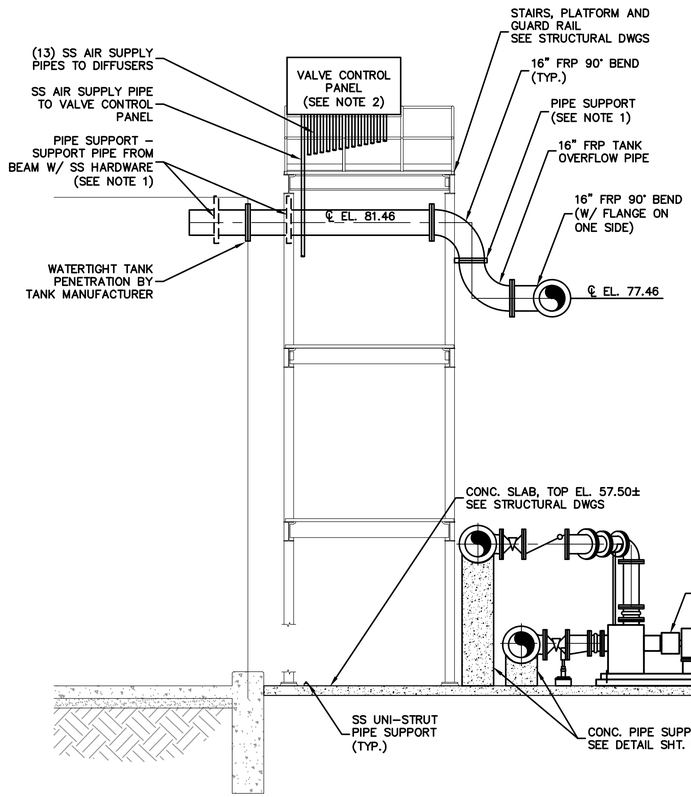

SECTION H / M3.10
SCALE: 1/4"=1'-0"

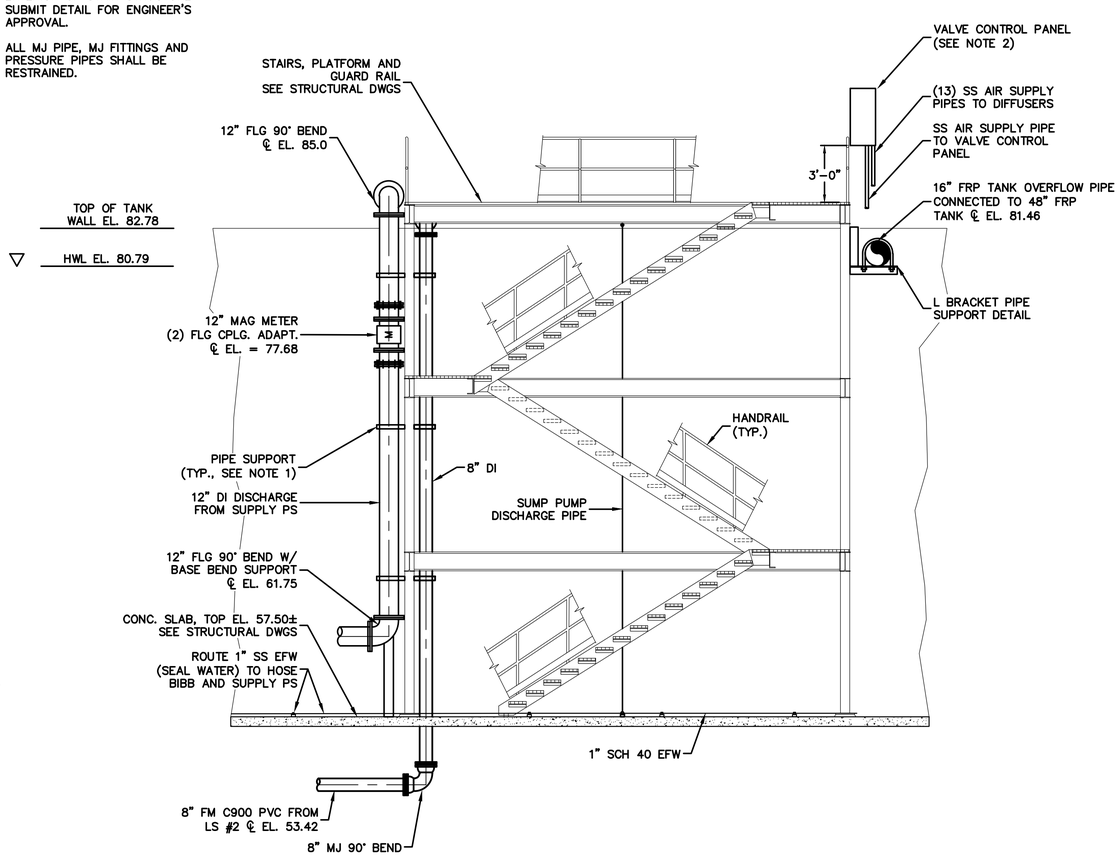

SECTION I / M3.10
SCALE: 1/4"=1'-0"

BID DOCUMENTS

IF THIS BAR DOES NOT MEASURE 1" THEN DRAWING HAS BEEN REDUCED SCALE ACCORDINGLY (0 – 1")

King
ENGINEERING ASSOCIATES, INC.
4921 Memorial Highway
One Memorial Center, Suite 300
Tampa, Florida 33634
Phone 813 880-8881
Fax 813 880-8882
www.kingengineering.com
Engineering License #2610

RECORD DRAWINGS
SURVEYED BY: DRAWN BY:
REVIEWED BY: PROJECT ENGINEER DATE
APPROVED BY: ENGINEER DATE

REVISION	BY	DATE

CITY OF CLEARWATER, FLORIDA
ENGINEERING DEPARTMENT
100 S. MYRTLE AVE.
CLEARWATER, FL 33756

INVESTIGATE BEFORE YOU EXCAVATE
CALL 811
SUNSHINE STATE ONE CALL OF FLORIDA
www.callsunshine.com
(800) 432-4770
MIN. 48 HOURS BEFORE YOU EXCAVATE

NORTHEAST WRF GRIT REMOVAL, MOVING BELT FILTER AND EQUALIZATION SYSTEM IMPROVEMENTS

EQUALIZATION TANK SECTIONS H & I

DWG NAME: M3.11	FIELD BOOK:	SURVEYED BY:	SCALE: VERT. N/A
CONTRACT NO.: 15-0045-UT	DATE DRAWN: MARCH 2016	DRAWN BY: MJG	HORIZ. AS SHOWN
JOB NO.: 2110-210-002	DESIGNED BY: LVM	CHECKED BY: TAT	SHEET NO.: 79 of 117

APPROVED FOR CONSTRUCTION

© COPYRIGHT 2010 KING ENGINEERING ASSOCIATES, INC. DRAWINGS AND CONCEPTS MAY NOT BE USED OR REPRODUCED WITHOUT WRITTEN PERMISSION. CONSENT IS HEREBY GRANTED SPECIFICALLY TO GOVERNMENTAL AGENCIES TO REPRODUCE THIS DOCUMENT IN COMPLIANCE WITH F.S. CHAPTER 119.

O:\ENV_ENG\2110\210\002\production\Drawings\M3.11-M3.15.dwg, March 18, 2020 2:53 PM, King Engineering Associate Inc.

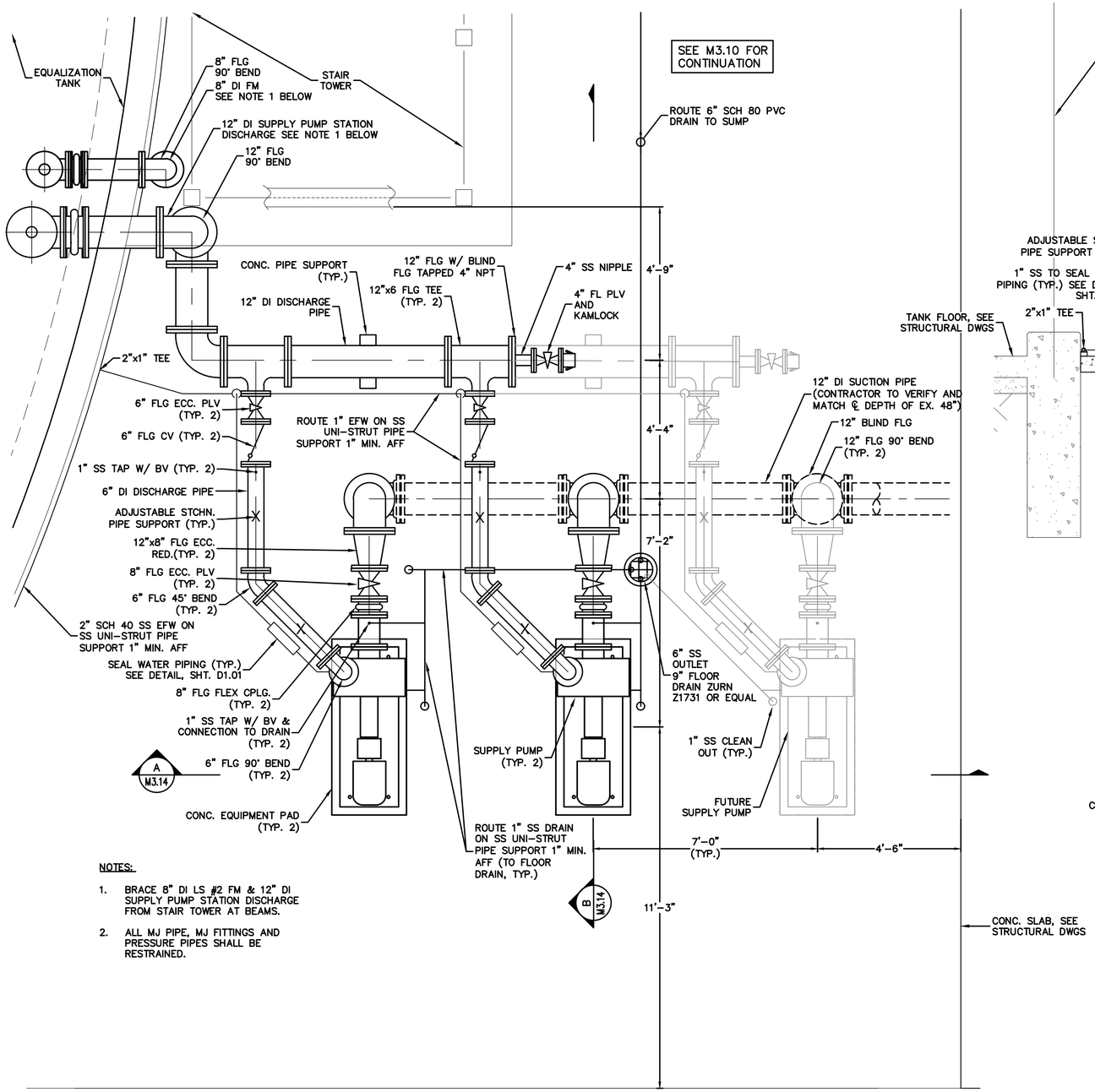

NOTES:

1. BRACE 8" DI LS #2 FM & 12" DI SUPPLY PUMP STATION DISCHARGE FROM STAIR TOWER AT BEAMS.
2. ALL MJ PIPE, MJ FITTINGS AND PRESSURE PIPES SHALL BE RESTRAINED.

SUPPLY PUMP STATION

SCALE: 1/2"=1'-0"

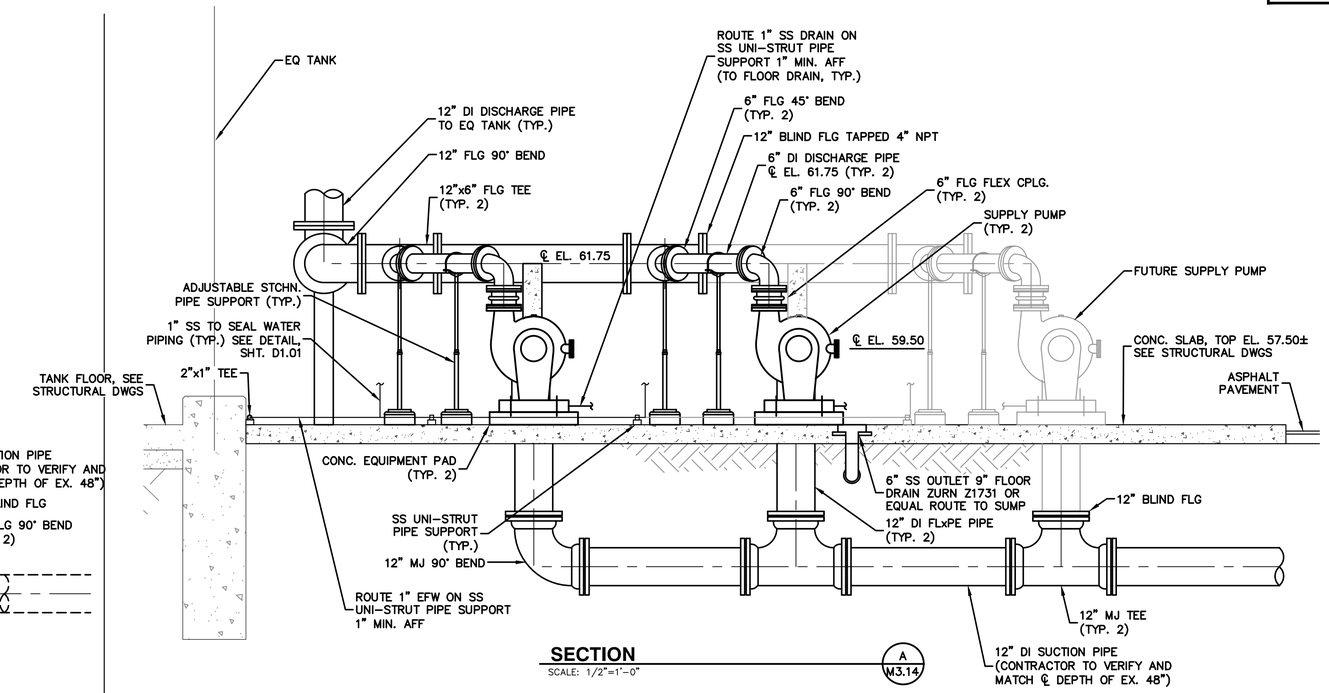

SECTION

SCALE: 1/2"=1'-0"

A M3.14

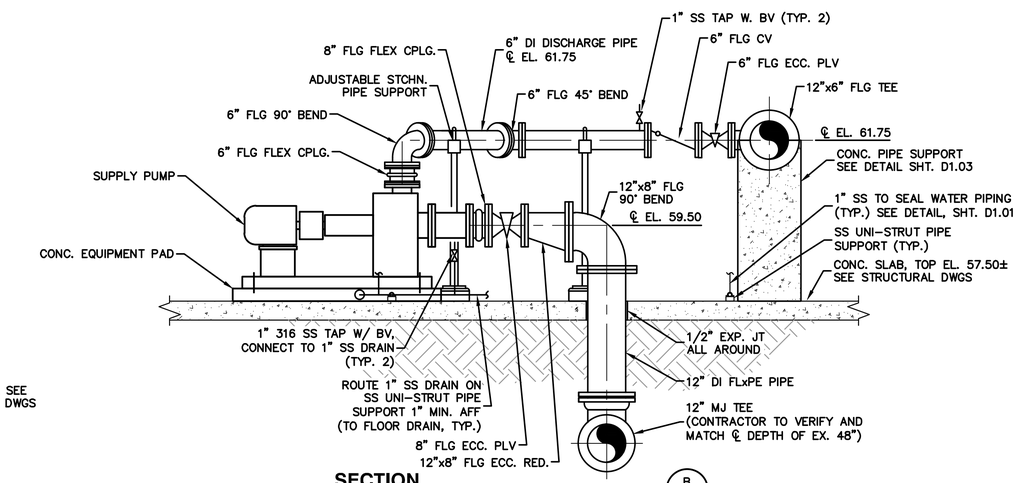

SECTION

SCALE: 1/2"=1'-0"

B M3.14

BID DOCUMENTS

IF THIS BAR DOES NOT MEASURE 1" THEN DRAWING HAS BEEN REDUCED SCALE ACCORDINGLY 0 1"

King
ENGINEERING ASSOCIATES, INC.
4921 Memorial Highway
One Memorial Center, Suite 300
Tampa, Florida 33634
Phone 813 880-8881
Fax 813 880-8882
www.kingengineering.com
Engineering License #2610

© COPYRIGHT 2010 KING ENGINEERING ASSOCIATES, INC. DRAWINGS AND CONCEPTS MAY NOT BE USED OR REPRODUCED WITHOUT WRITTEN PERMISSION. CONSENT IS HEREBY GRANTED SPECIFICALLY TO GOVERNMENTAL AGENCIES TO REPRODUCE THIS DOCUMENT IN COMPLIANCE WITH F.S. CHAPTER 119.

RECORD DRAWINGS

SURVEYED BY: | DRAWN BY:
REVIEWED BY: PROJECT ENGINEER DATE
APPROVED BY: ENGINEER DATE

REVISION	BY	DATE

CITY OF CLEARWATER, FLORIDA
ENGINEERING DEPARTMENT
100 S. MYRTLE AVE.
CLEARWATER, FL 33756

INVESTIGATE BEFORE YOU EXCAVATE
CALL 811
SUNSHINE STATE ONE CALL OF FLORIDA
www.callsunshine.com
(800) 432-4770
MIN. 48 HOURS BEFORE YOU EXCAVATE

NORTHEAST WRF GRIT REMOVAL, MOVING BELT FILTER AND EQUALIZATION SYSTEM IMPROVEMENTS

EQUALIZATION TANK SUPPLY PUMP STATION
ENLARGED PLAN AND SECTIONS

DWG NAME: M3.11	FIELD BOOK:	SURVEYED BY:	SCALE: VERT. N/A
CONTRACT NO.: 15-0045-UT	DATE DRAWN: MARCH 2016	DRAWN BY: MJG	HORIZ. AS SHOWN
JOB NO.: 2110-210-002	DESIGNED BY: LVM	CHECKED BY: TAT	SHEET NO.: 80 of 117

APPROVED FOR CONSTRUCTION

O:\ENV_ENG\2110\210\002\production\Drawings\M3.11-M3.15.dwg, March 18, 2020 2:53 PM, King Engineering Associate Inc.

NOTES:

1. ALL MJ PIPE, MJ FITTINGS AND PRESSURE PIPES SHALL BE RESTRAINED.

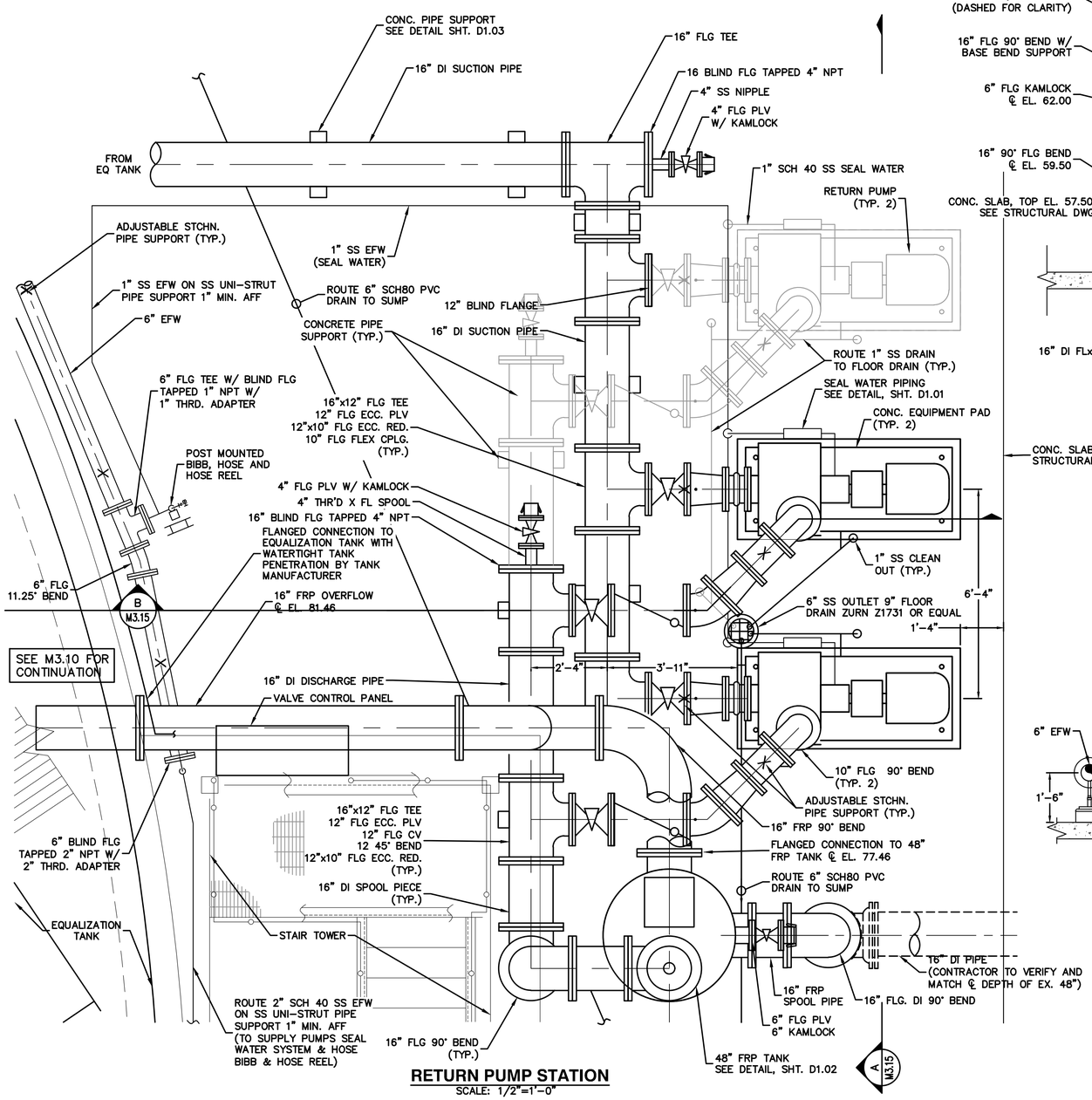

RETURN PUMP STATION

SCALE: 1/2"=1'-0"

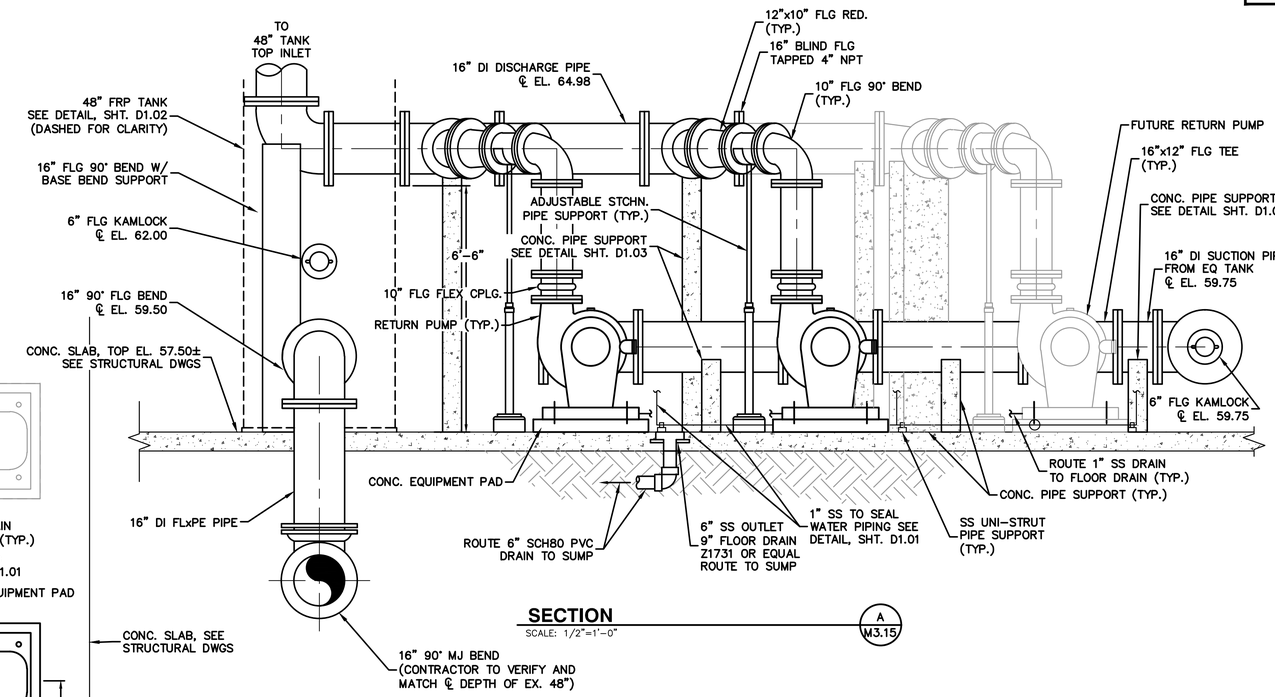

SECTION

SCALE: 1/2"=1'-0"

A M3.15

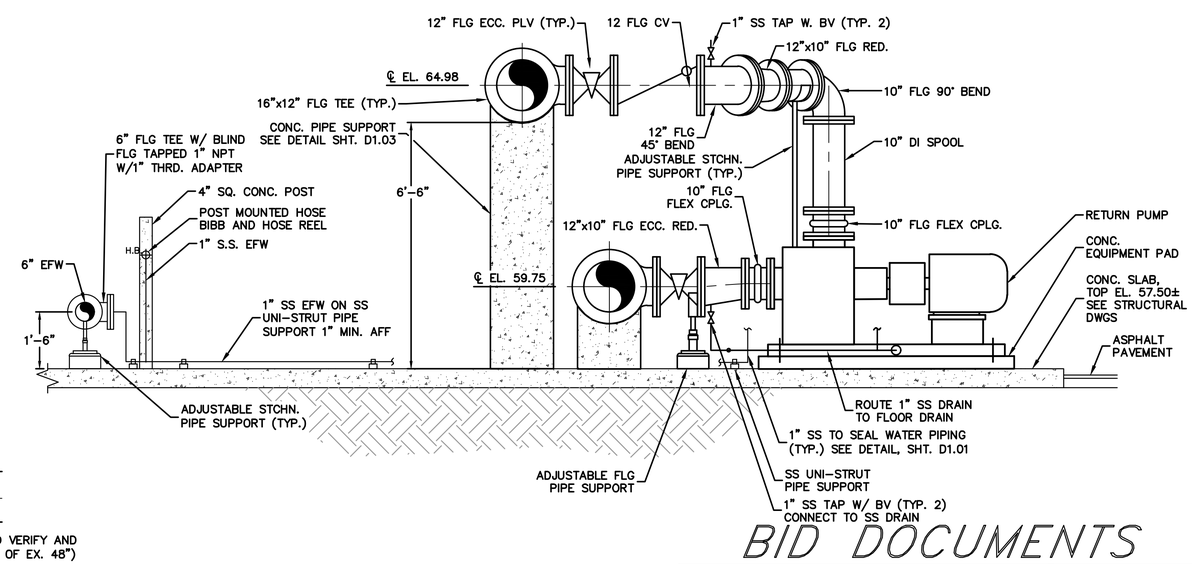

SECTION

SCALE: 1/2"=1'-0"

B M3.15

BID DOCUMENTS

IF THIS BAR DOES NOT MEASURE 1" THEN DRAWING HAS BEEN REDUCED SCALE ACCORDINGLY 0 1"

King ENGINEERING ASSOCIATES, INC.
4921 Memorial Highway
One Memorial Center, Suite 300
Tampa, Florida 33634
Phone 813 880-8881
Fax 813 880-8882
www.kingengineering.com
Engineering License #2610

RECORD DRAWINGS

SURVEYED BY: DRAWN BY:
REVIEWED BY: PROJECT ENGINEER DATE
APPROVED BY: ENGINEER DATE

REVISION	BY	DATE

CITY OF CLEARWATER, FLORIDA
ENGINEERING DEPARTMENT
100 S. MYRTLE AVE.
CLEARWATER, FL 33756

INVESTIGATE BEFORE YOU EXCAVATE
CALL 811
SUNSHINE STATE ONE CALL OF FLORIDA
www.callsunshine.com
(800) 432-4770
MIN. 48 HOURS BEFORE YOU EXCAVATE

NORTHEAST WRF GRIT REMOVAL, MOVING BELT FILTER AND EQUALIZATION SYSTEM IMPROVEMENTS

EQUALIZATION TANK RETURN PUMP STATION
ENLARGED PLAN AND SECTIONS

DWG NAME: M3.11	FIELD BOOK:	SURVEYED BY:	SCALE: VERT. N/A
CONTRACT NO.: 15-0045-UT	DATE DRAWN: MARCH 2016	DRAWN BY: MJG	HORIZ. AS SHOWN
JOB NO.: 2110-210-002	DESIGNED BY: LVM	CHECKED BY: TAT	SHEET NO.: 81 of 117

APPROVED FOR CONSTRUCTION

© COPYRIGHT KING ENGINEERING ASSOCIATES, INC. DRAWINGS AND CONCEPTS MAY NOT BE USED OR REPRODUCED WITHOUT WRITTEN PERMISSION. CONSENT IS HEREBY GRANTED SPECIFICALLY TO GOVERNMENTAL AGENCIES TO REPRODUCE THIS DOCUMENT IN COMPLIANCE WITH F.S. CHAPTER 119.

O:\ENV_ENG\2110\210\002\production\Drawings\M3.11-M3.15.dwg, March 18, 2020 2:53 PM, King Engineering Associate Inc.

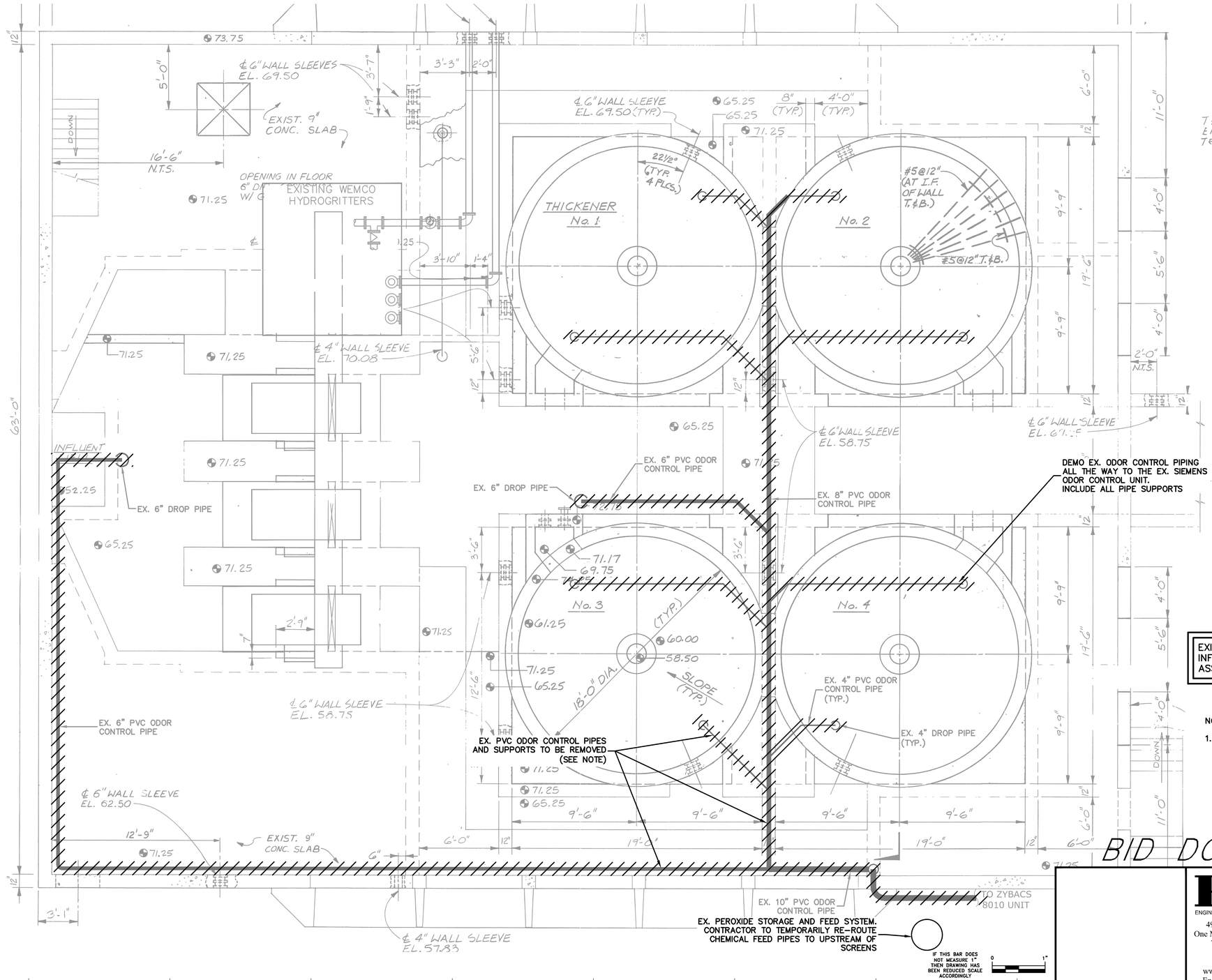

EXISTING NORTHEAST PLANT BACKGROUND INFORMATION BASED ON BRILEY, WILD & ASSOCIATES RECORD DRAWINGS.

NOTE:

1. REMOVE ALL EXISTING PVC ODOR CONTROL PIPE AND SUPPORTS AND REPAIR ALL HOLES IN CONCRETE OR GRATING NOT SUITABLE FOR NEW PIPING.

BID DOCUMENTS

King
ENGINEERING ASSOCIATES, INC.
4921 Memorial Highway
One Memorial Center, Suite 300
Tampa, Florida 33634
Phone 813 880-8881
Fax 813 880-8882
www.kingengineering.com
Engineering License #2610

© COPYRIGHT 2010 KING ENGINEERING ASSOCIATES, INC. DRAWINGS AND CONCEPTS MAY NOT BE USED OR REPRODUCED WITHOUT WRITTEN PERMISSION CONSENT IS HEREBY GRANTED SPECIFICALLY TO GOVERNMENTAL AGENCIES TO REPRODUCE THIS DOCUMENT IN COMPLIANCE WITH F.S. CHAPTER 119.

O:\ENV_ENG\2110\210\002\production\Drawings\M3.03, M4.01 and M4.10.dwg, March 18, 2020 2:54 PM, King Engineering Associate Inc.

RECORD DRAWINGS

SURVEYED BY:	DRAWN BY:
REVIEWED BY:	PROJECT ENGINEER / DATE
APPROVED BY:	ENGINEER / DATE

REVISION	BY	DATE

CITY OF CLEARWATER, FLORIDA
ENGINEERING DEPARTMENT
100 S. MYRTLE AVE.
CLEARWATER, FL 33756

INVESTIGATE BEFORE YOU EXCAVATE
CALL 811
SUNSHINE STATE ONE CALL OF FLORIDA
www.callsunshine.com
(800) 432-4770
MIN. 48 HOURS BEFORE YOU EXCAVATE

NORTHEAST WRF GRIT REMOVAL, MOVING BELT FILTER AND EQUALIZATION SYSTEM IMPROVEMENTS

INFLUENT STRUCTURE ODOR CONTROL DEMO PLAN

DWG NAME: M3.03, M4.01 AND M4.10	FIELD BOOK:	SURVEYED BY:	SCALE: VERT. N/A
CONTRACT NO.: 15-0045-UT	DATE DRAWN: MARCH 2016	DRAWN BY: MJG	HORIZ. AS SHOWN
JOB NO.: 2110-210-002	DESIGNED BY: KND	CHECKED BY: TAT	SHEET NO.: 82 of 117
APPROVED FOR CONSTRUCTION			

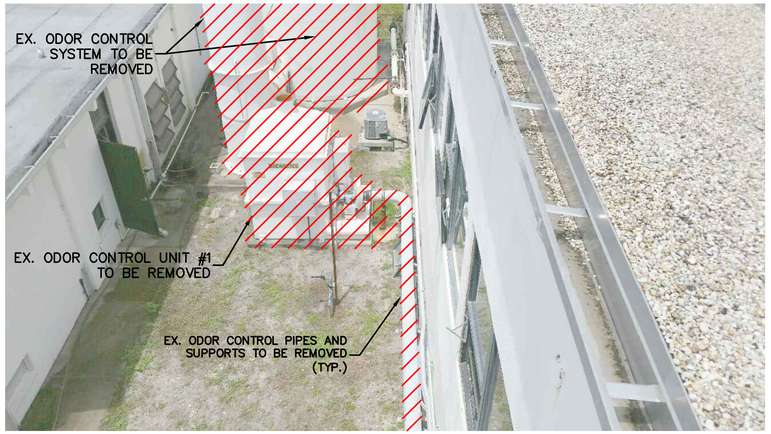

IMAGE #1

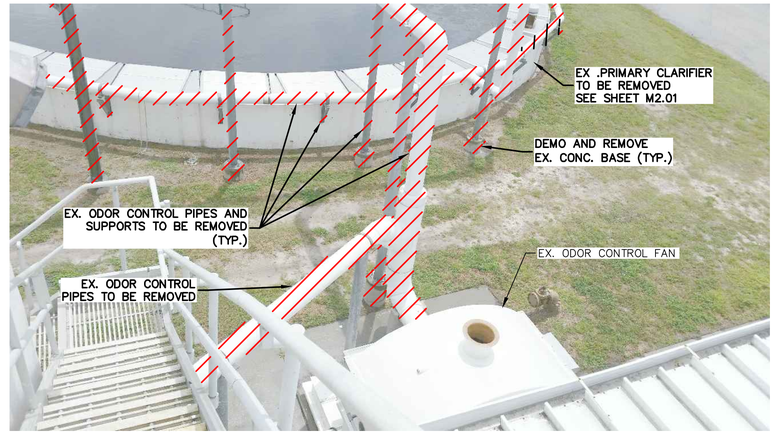

IMAGE #2

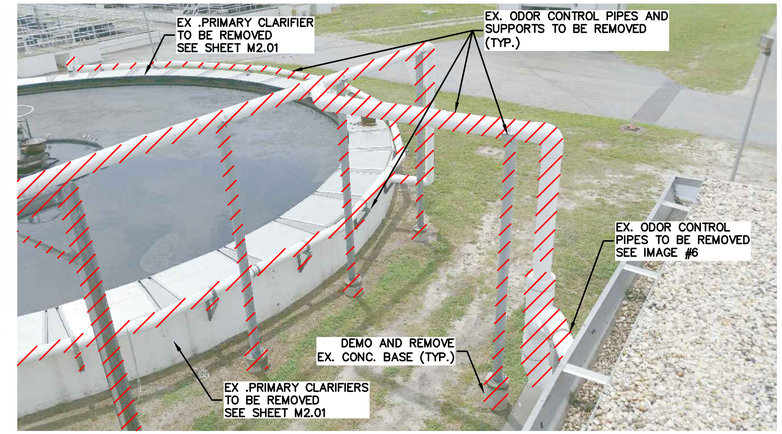

IMAGE #3

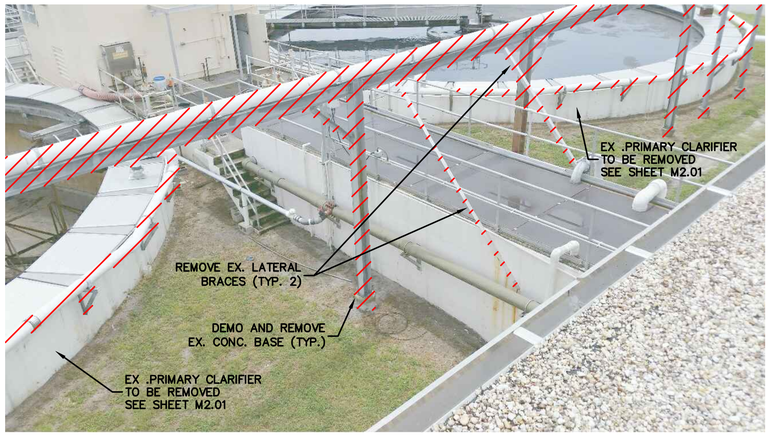

IMAGE #4

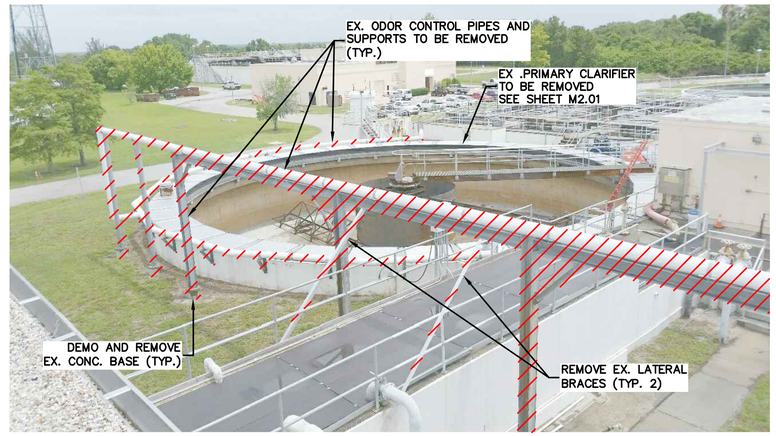

IMAGE #5

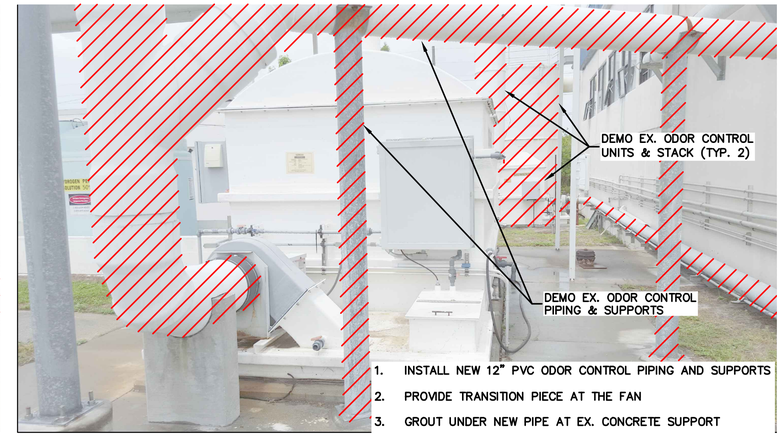

IMAGE #6

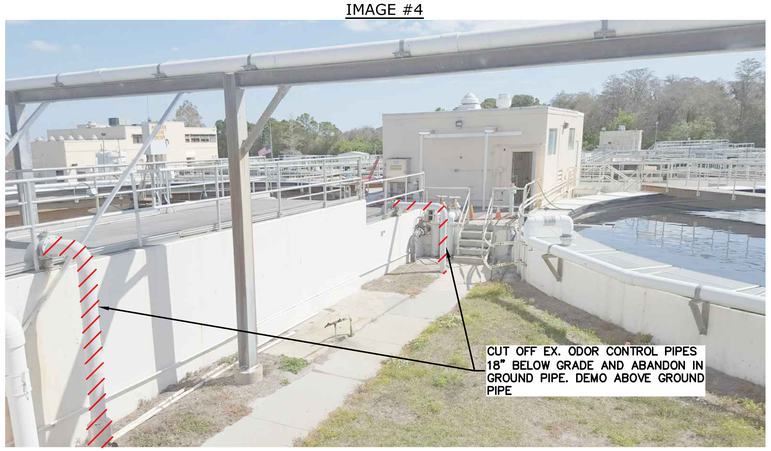

IMAGE #7

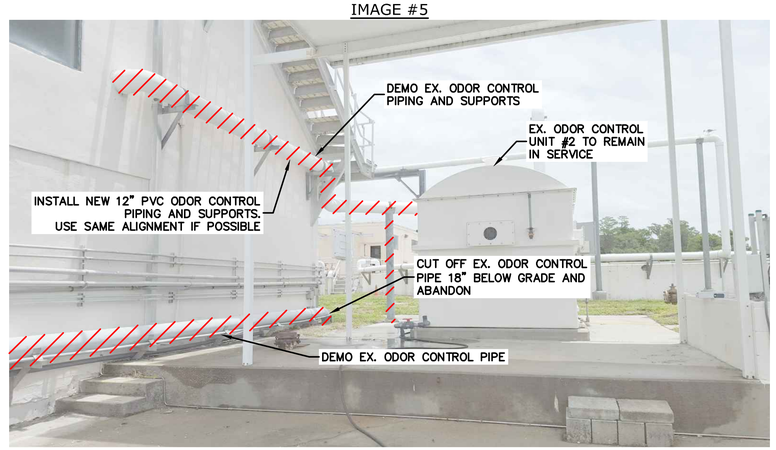

IMAGE #8

IF THIS BAR DOES NOT MEASURE 1" THEN DRAWING HAS BEEN REDUCED SCALE ACCORDINGLY 0 1"

BID DOCUMENTS

King
ENGINEERING ASSOCIATES, INC.
4921 Memorial Highway
One Memorial Center, Suite 300
Tampa, Florida 33634
Phone 813 880-8881
Fax 813 880-8882
www.kingengineering.com
Engineering License #2610

© COPYRIGHT 2010 KING ENGINEERING ASSOCIATES, INC. DRAWINGS AND CONCEPTS MAY NOT BE USED OR REPRODUCED WITHOUT WRITTEN PERMISSION CONSENT IS HEREBY GRANTED SPECIFICALLY TO GOVERNMENTAL AGENCIES TO REPRODUCE THIS DOCUMENT IN COMPLIANCE WITH F.S. CHAPTER 119.

RECORD DRAWINGS

SURVEYED BY: | DRAWN BY:
REVIEWED BY: PROJECT ENGINEER | DATE
APPROVED BY: ENGINEER | DATE

REVISION	BY	DATE

CITY OF CLEARWATER, FLORIDA
ENGINEERING DEPARTMENT
100 S. MYRTLE AVE.
CLEARWATER, FL 33756

INVESTIGATE BEFORE YOU EXCAVATE
CALL 811
SUNSHINE STATE ONE CALL OF FLORIDA
www.callsunshine.com
(800) 432-4770
MIN. 48 HOURS BEFORE YOU EXCAVATE

NORTHEAST WRF GRIT REMOVAL, MOVING BELT FILTER AND EQUALIZATION SYSTEM IMPROVEMENTS

INFLUENT STRUCTURE ODOR CONTROL DEMO PLAN

DWG NAME: M3.03, M4.01 AND M4.10	FIELD BOOK:	SURVEYED BY:	SCALE: VERT. N/A
CONTRACT NO.: 15-0045-UT	DATE DRAWN: MARCH 2016	DRAWN BY: MJG	HORIZ. AS SHOWN
JOB NO.: 2110-210-002	DESIGNED BY: LVM	CHECKED BY: TAT	SHEET NO.: 83 of 117

APPROVED FOR CONSTRUCTION

O:\ENV_ENG\2110\210\002\Production\Drawings\M3.03, M4.01 and M4.10.dwg, March 26, 2020 3:12 PM, King Engineering Associate Inc.

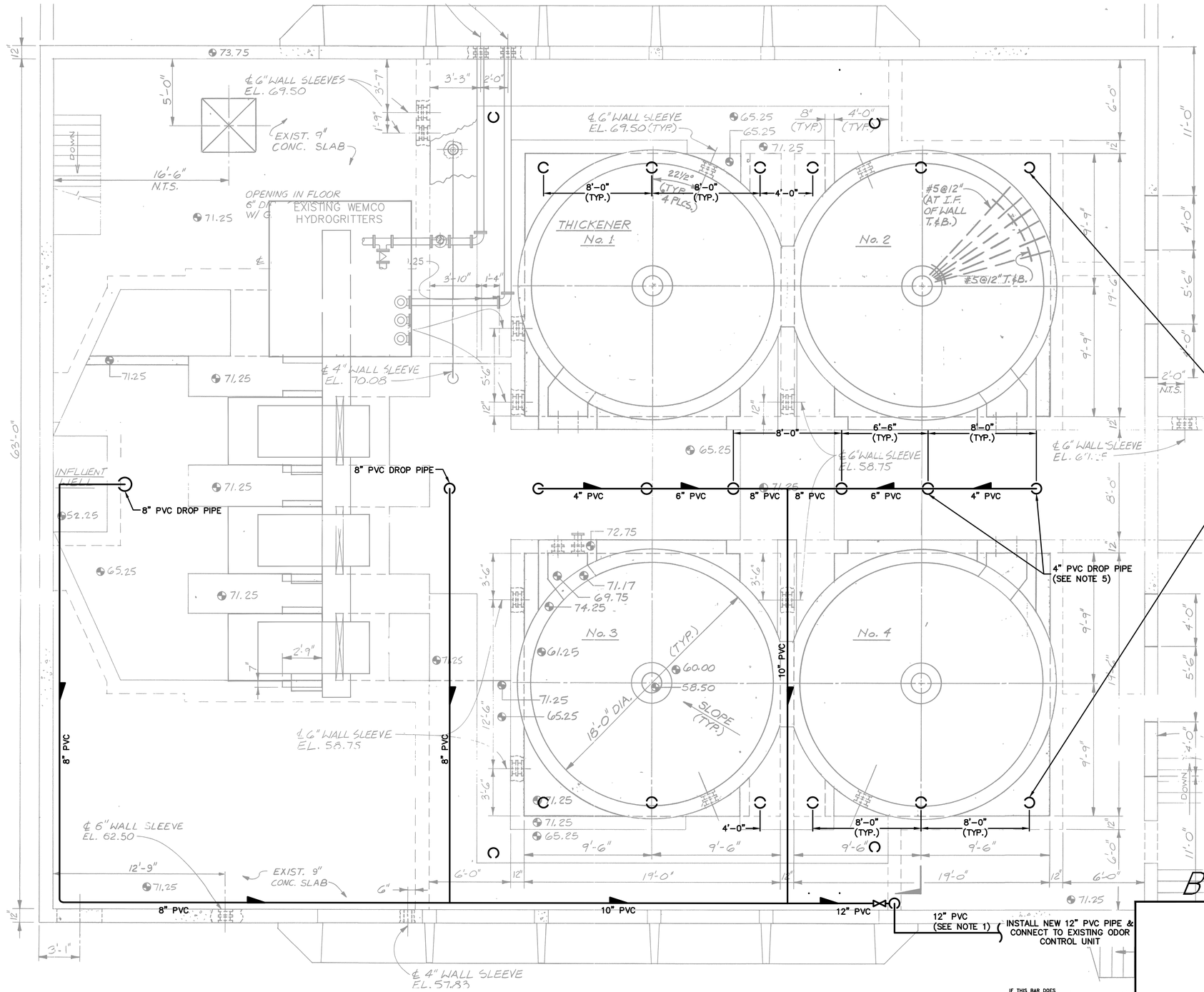

NOTES:

1. AIR PIPING SHALL BE ASTM D-1784 CELL CLASS 12454-B PVC AS MANUFACTURED BY HARRISON MACHINE AND PLASTIC OR EQUAL. CORE DRILL THROUGH CONCRETE WALL 3 FEET ABOVE FINISHED FLOOR AND SEAL WITH LINK-SEAL.
2. ROUTE ALL PIPING AROUND EXISTING EQUIPMENT AND OPENINGS. PROVIDE 304 SS PIPE SUPPORTS
3. INSTALL LEVER OPERATED BUTTERFLY DAMPERS ON ALL DROP PIPES. DAMPERS SHALL BE PVC SOCKET TYPE WITH SS LOCKING HARDWARE AND LOCKING QUADRANT AS MANUFACTURED BY HARRISON MACHINE, U.S. PLASTIC CORP., OR EQUAL.
4. INSTALL ALL HORIZONTAL RUNS A MINIMUM OF 9 FEET ABOVE FINISHED FLOOR.
5. FOR DROP PIPES THROUGH GRATING, CUT SLOTS IN EXISTING RUBBER MAT AND PRESERVE TO RE-INSTALL AS COVER.

LEGEND

- RETURN PIPE
- PIPE CROSSING
- AIR FLOW DIRECTION

EXISTING NORTHEAST PLANT BACKGROUND INFORMATION BASED ON BRILEY, WILD & ASSOCIATES RECORD DRAWINGS.

BID DOCUMENTS

IF THIS BAR DOES NOT MEASURE 1" THEN DRAWING HAS BEEN REDUCED SCALE ACCORDINGLY

King
ENGINEERING ASSOCIATES, INC.
4921 Memorial Highway
One Memorial Center, Suite 300
Tampa, Florida 33634
Phone 813 880-8881
Fax 813 880-8882
www.kingengineering.com
Engineering License #2610

RECORD DRAWINGS

SURVEYED BY: | DRAWN BY:
REVIEWED BY: PROJECT ENGINEER DATE
APPROVED BY: ENGINEER DATE

REVISION	BY	DATE

CITY OF CLEARWATER, FLORIDA
ENGINEERING DEPARTMENT
100 S. MYRTLE AVE.
CLEARWATER, FL 33756

INVESTIGATE BEFORE YOU EXCAVATE
CALL 811
SUNSHINE STATE ONE CALL OF FLORIDA
www.callsunshine.com
(800) 432-4770
MIN. 48 HOURS BEFORE YOU EXCAVATE

NORTHEAST WRF GRIT REMOVAL, MOVING BELT FILTER AND EQUALIZATION SYSTEM IMPROVEMENTS

INFLUENT STRUCTURE ODOR CONTROL PROPOSED IMPROVEMENTS

DWG NAME: M3.03, M4.01 AND M4.10	FIELD BOOK:	SURVEYED BY:	SCALE: VERT. N/A
CONTRACT NO.: 15-0045-UT	DATE DRAWN: MARCH 2016	DRAWN BY: MJG	HORIZ. AS SHOWN
JOB NO.: 2110-210-002	DESIGNED BY: LVM	CHECKED BY: TAT	SHEET NO.: 84 of 117

APPROVED FOR CONSTRUCTION

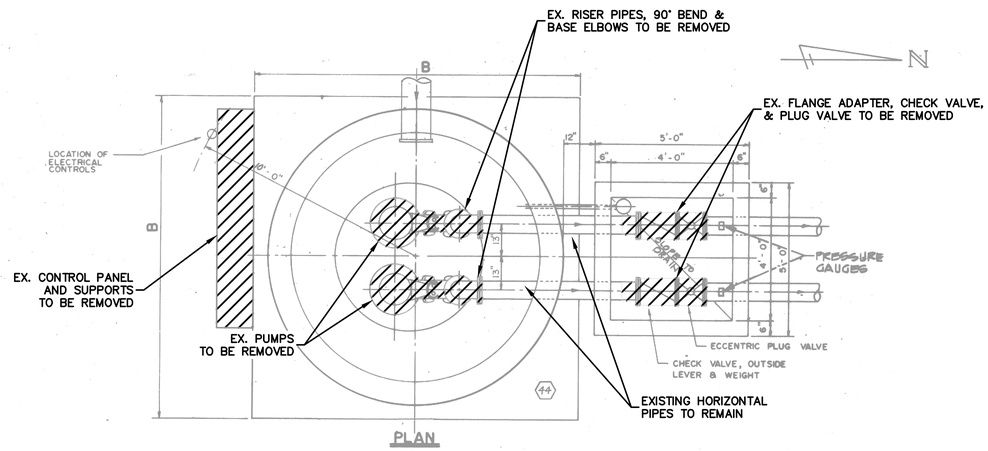

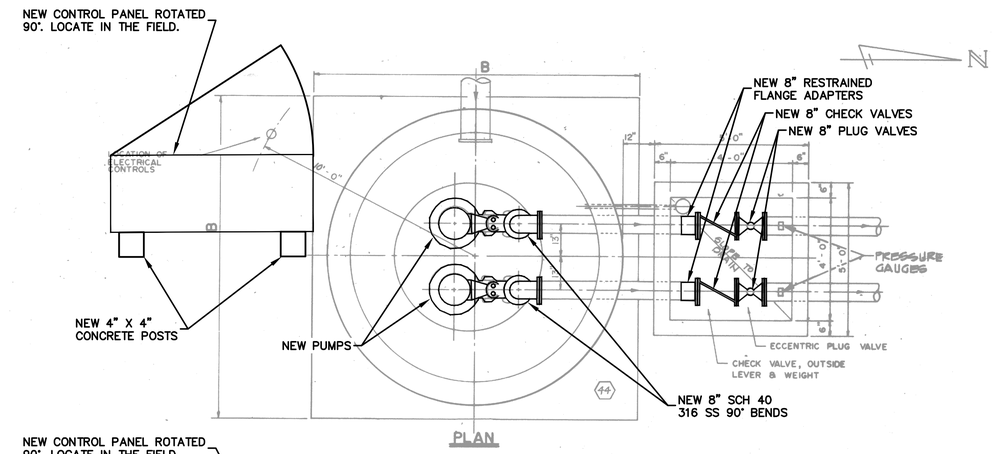

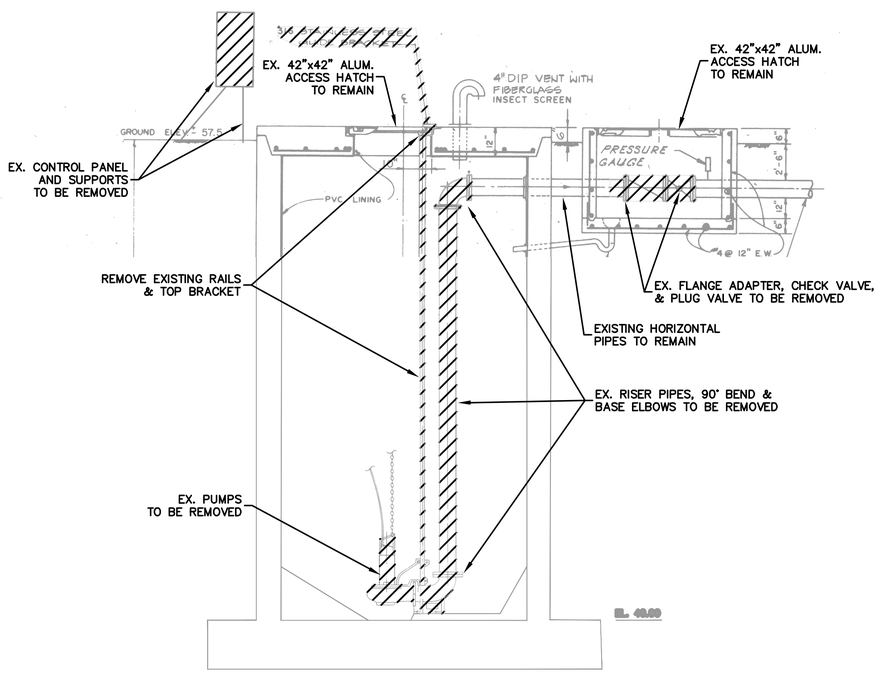

DEMO PLAN

N.T.S.

NOTES:

1. VERIFY ALL CRITICAL DIMENSIONS BEFORE ORDERING EQUIPMENT & PIPING COMPONENTS.
2. NEW PUMPS TO BE FLYGT NP3127 HT 3 ~ ADAPTIVE 488 DESIGN FLOW RATE 483 GPM DESIGN TDH 49.7 FEET 4" DIA DISCH, 10 HP.
3. PROVIDE A TEMPORARY DUPLEX PUMPING SYSTEM OF THE SAME CAPACITY AS THE NEW PUMPS TO SERVE THE DEWATERING BUILDING WHILE THE LIFT STATION IS BEING REHABILITATED.

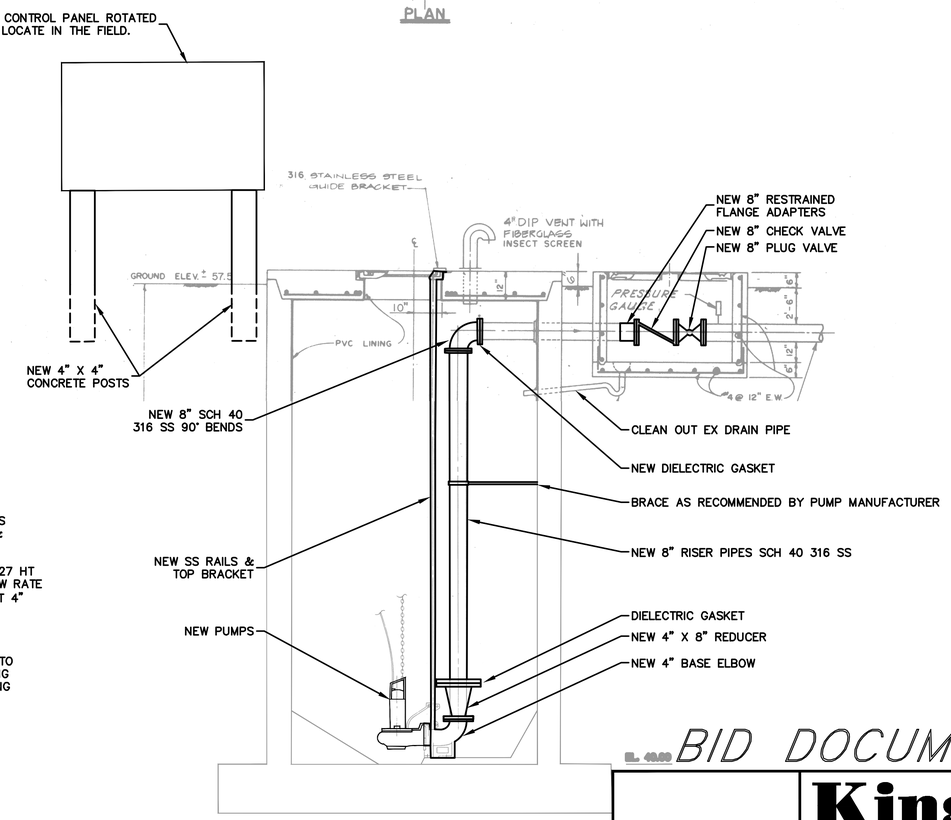

BID DOCUMENTS

PROPOSED IMPROVEMENT PLAN

N.T.S.

IF THIS BAR DOES NOT MEASURE 1" THEN DRAWING HAS BEEN REDUCED SCALE ACCORDINGLY 0 1"

King
ENGINEERING ASSOCIATES, INC.
4921 Memorial Highway
One Memorial Center, Suite 300
Tampa, Florida 33634
Phone 813 880-8881
Fax 813 880-8882
www.kingengineering.com
Engineering License #2610

RECORD DRAWINGS
SURVEYED BY: DRAWN BY:
REVIEWED BY: PROJECT ENGINEER DATE
APPROVED BY: ENGINEER DATE

REVISION	BY	DATE

CITY OF CLEARWATER, FLORIDA
ENGINEERING DEPARTMENT
100 S. MYRTLE AVE.
CLEARWATER, FL 33756

INVESTIGATE BEFORE YOU EXCAVATE
CALL 811
SUNSHINE STATE ONE CALL OF FLORIDA
www.callsunshine.com
(800) 432-4770
MIN. 48 HOURS BEFORE YOU EXCAVATE

NORTHEAST WRF GRIT REMOVAL, MOVING BELT FILTER AND EQUALIZATION SYSTEM IMPROVEMENTS

IN-PLANT LIFT STATION #2 DEMOLITION & PROPOSED IMPROVEMENT PLAN

DWG NAME: M5.00	FIELD BOOK:	SURVEYED BY:	SCALE: VERT. N/A
CONTRACT NO.: 15-0045-UT	DATE DRAWN: MARCH 2016	DRAWN BY: MJG	HORIZ. AS SHOWN
JOB NO.: 2110-210-002	DESIGNED BY: LVM	CHECKED BY: TAT	SHEET NO.: 85 of 117

APPROVED FOR CONSTRUCTION

© COPYRIGHT 2010 KING ENGINEERING ASSOCIATES, INC. DRAWINGS AND CONCEPTS MAY NOT BE USED OR REPRODUCED WITHOUT WRITTEN PERMISSION. CONSENT IS HEREBY GRANTED SPECIFICALLY TO GOVERNMENTAL AGENCIES TO REPRODUCE THIS DOCUMENT IN COMPLIANCE WITH F.S. CHAPTER 119.

O:\ENV_ENG\2110\210\002\production\Drawings\M5.00.dwg, March 18, 2020 2:54 PM, King Engineering Associate Inc.

ABBREVIATION LEGEND

A	AMPS
AFF	ABOVE FINISHED FLOOR
AFC	ARC FAULT CURRENT
AIC	AMPERE INTERRUPTING CURRENT
A/C	AIR CONDITIONING
CAH	CONDUCTIVITY ALARM HIGH
CB	CIRCUIT BREAKER
CDV	CONDENSATE DRAIN VALVE
CV	CONTROL VALVE
DN	DOWN
EG	EQUIPMENT GROUND
EWH	ELECTRIC WATER HEATER
EX	EXISTING
FCV	FLOW CONTROL VALVE
FE	FLOW ELEMENT
FIT	FLOW INDICATING TRANSMITTER
FS	FLOW SWITCH
FV	FLOW VALVE
GALV	GALVANIZED
GC	GROUND CONDUCTOR
GF	GROUND FAULT
GND	GROUND
HOA	HAND OFF AUTOMATIC
HP	HORSE POWER
HTR	HEATER
I/O	INPUT/OUTPUT
JB	JUNCTION BOX
LCP	LOCAL CONTROL PANEL
LE	LEVEL ELEMENT
LIT	LEVEL INDICATING TRANSMITTER
LOC	LOCAL
LS	LIMIT SWITCH
LSIG	LONG TIME, SHORT TIME, INSTANTANEOUS GROUND FAULT PROTECTION FEATURES
LSL	LEVEL SWITCH LOW
LT	LEVEL SENSER
MCB	MAIN CIRCUIT BREAKER
MCC	MOTOR CONTROL CENTER
MCP	MASTER CONTROL PANEL
MFR	MANUFACTURER
MLO	MAIN LUGS ONLY
MSB	MAIN SWITCHBOARD
MTD	MOUNTED
NS	VIBRATION SWITCH
O.C.	ON CENTER
P	POLE
PIT	PRESSURE INDICATING TRANSMITTER
PLC	PROGRAMMABLE LOGIC CONTROLLER
POS	POSITION SWITCH
PS	PRESSURE SWITCH
PM	POWER MONITOR
R	RELOCATED
REM	REMOTE
RIO	REMOTE INPUT/OUTPUT CABINET
RTD	RESISTANCE TEMPURATURE SWITCH
SS	STAINLESS STEEL
SI	SHAFT TACHOMETER SENSOR
SPD	SURGE PROTECTION DEVICE
SWS	SEAL WATER SOLENOID
TS	TEMPERATURE SWITCH
TSP	TWISTED SHIELDED PAIR
UPS	UNINTERRUPTABLE POWER SOURCE
VFD	VARIABLE FREQUENCY DRIVES
WP	WEATHER PROOF

ELECTRICAL SYMBOL LEGEND

SYMBOL	DESCRIPTION	MOUNTING
	POWER PANELBOARD, VOLTAGE AS NOTED	M.H. 6'-6" MIN. TO TOP
	BRANCH PANEL	M.H. 6'-6" MIN. TO TOP
	EQUIPMENT CONTROL PANEL	M.H. 6'-6" MIN. TO TOP
	DUPLEX RECEPTACLE (20A, 125V)	M.H. 18" TO CENTERLINE
	RACEWAY CONCEALED IN WALL OR ABOVE CEILINGS	SEE SPECIFICATIONS
	RACEWAY CONCEALED UNDER FLOOR OR BELOW GRADE	SEE SPECIFICATIONS
	RACEWAY EXPOSED ON WALL OR CEILING	SEE SPECIFICATIONS
L1A-1,3	HOMERUN TO PANEL. LETTERS INDICATE PANEL. NUMBERS INDICATE CIRCUIT. NOTE: ANY CIRCUIT WITHOUT FURTHER DESIGNATION INDICATES A TWO WIRE CIRCUIT. A GREATER NUMBER OF WIRES IS INDICATED AS SHOWN: (3 WIRES & EQUIPMENT GROUND), (4 WIRES & EQUIPMENT GROUND), ETC. EG	SEE SPECIFICATIONS
UP DN	RACEWAY RISER, UP OR DOWN AS NOTED.	SEE SPECIFICATIONS
	JUNCTION BOX OR OUTLET BOX, 4"x2 1/8" DEEP BOX UNLESS OTHERWISE NOTED	SEE SPECIFICATIONS
3	MOTOR, NUMERAL INDICATES HORSEPOWER	BY OTHER DIVISION
	NON-FUSIBLE SAFETY SWITCH	SEE SPECIFICATIONS
	COMBINATION MOTOR STARTER WITH CIRCUIT BREAKER (FOR THERMAL PROTECTION)	SEE SPECIFICATIONS
VFD	VARIABLE FREQUENCY DRIVE	SEE SPECIFICATIONS

GENERAL NOTES:

1. THE CONTRACTOR SHALL PROVIDE RUBBER MATS AND PLYWOOD COVERS FOR ALL OWNERS EQUIPMENT SUSCEPTIBLE TO DAMAGE.
2. ALL WORK SHALL BE PERFORMED DURING TIME PERIODS ACCEPTABLE TO THE OWNER. SCHEDULE ALL WORK WITH THE OWNER'S REPRESENTATIVE BEFORE PROCEEDING.
3. THE CONTRACTOR SHALL PERFORM ALL TEMPORARY WORK NECESSARY TO MAINTAIN CONTINUITY OF ELECTRICAL SERVICE WHEN CONNECTION IS MADE TO EXISTING SYSTEMS AND FACILITIES. EXISTING SERVICE SHALL NOT BE INTERRUPTED WITHOUT PRIOR CONSENT OF THE OWNER'S REPRESENTATIVE AND MAY BE INTERRUPTED ONLY AT AND FOR THE SPECIFIED TIME DESIGNATED BY OWNER'S REPRESENTATIVE. THE CONTRACTOR SHALL BE GUIDED BY THE OWNER'S REPRESENTATIVE AT ALL TIMES IN MATTERS AFFECTING THE EXISTING FACILITIES.
4. UPON COMPLETION OF THE WORK, THE CONTRACTOR SHALL ENSURE THAT ALL SYSTEMS OPERATE AS DESIGNED AND REQUIRED AND SHALL REVIEW THEIR OPERATION WITH THE OWNER. COMPLETE SET OF AS-BUILT DRAWINGS SHALL BE COMPILED (BY THE CONTRACTOR) AND ISSUED (1 EACH) TO THE ENGINEER AND BUILDING MAINTENANCE PERSONNEL UPON COMPLETION OF CONSTRUCTION AND TESTING.
5. ALL ELECTRICAL AND INSTRUMENTATION WIRING AND CONDUIT SHALL BE INSTALLED BELOW GRADE AND SHALL NOT CROSS SIDEWALKS OR WALKWAYS. ABOVE GRADE WHERE POSSIBLE.

GENERAL DEMOLITION NOTES:

1. REMOVE AND/OR RELOCATE ALL CONDUIT WIRE, OUTLET BOXES, ETC. WHICH ARE MADE UNNECESSARY BECAUSE OF DEMOLITION/NEW CONSTRUCTION. VERIFY LOCATIONS AND QUANTITIES OF ELECTRICAL EQUIPMENT AND WIRING AT THE SITE. CONDUIT TO BE REMOVED OR ABANDONED SHALL BE REMOVED COMPLETELY IF POSSIBLE. WHERE (ABOVE GRADE) REMOVAL IS NOT POSSIBLE, CONDUIT SHALL BE CAPPED AND TAGGED AS SPARE. WHERE (BELOW GRADE) REMOVAL IS NOT POSSIBLE, CONDUIT SHALL BE CUT BELOW THE SURFACE AND CAPPED. ALL MATERIALS REMOVED SHALL BE DISPOSED OF BY THE CONTRACTOR. PATCH CONCRETE FLOOR TO MATCH EXISTING.
2. ANY DEMOLITION OR REMOVAL INDICATED IS SHOWN TO PROVIDE THE GENERAL EXTENT OF DEMOLITION. THIS INFORMATION IS NOT A RECORD DRAWING OF EXISTING CONDITIONS.
3. ANY DEMOLITION OF EXISTING ELECTRICAL EQUIPMENT (AS INDICATED IN NOTES 1 & 2 ABOVE) SHALL BE CONFIRMED AND APPROVED BY OWNER BEFORE EXISTING EQUIPMENT IS DISCONNECTED AND REMOVED.

LIGHTING FIXTURE SCHEDULE

SYMBOL	DESCRIPTION	VOLTS	FIXTURE WATTAGE	LAMPS	MOUNTING
A	4' HAZARDOUS FIXTURE CROUSE-HINDS NO. MLL-4-UNV1-S903-TF LITHONIA HUBBELL METALUX	MVOLT	54.5	LED	SURFACE
B	TELESCOPING LIGHT POLE WITH EXPLOSION PROOF LIGHT FIXTURE. CROUSE-HINDS POLE NO. V6S-H-MHK-RTS-A-C-JM5-T59SX77. CROUSE-HINDS LIGHT NO. VMV-3L-J-R3-UNV1-S890. LITHONIA HUBBELL METALUX	MVOLT	29	LED	POLE MOUNT

LIGHTNING PROTECTION SYSTEM

CONTRACTOR SHALL FURNISH AND INSTALL CLASS I LIGHTNING PROTECTION SYSTEM ON EQUALIZATION TANK, ELECTRICAL ENCLOSURES AND MOVING BELT FILTER PLATFORM. ALL MATERIALS SHALL BE ALUMINUM. SYSTEM SHALL COMPLY WITH ALL REQUIREMENTS FOR A "MASTER LABEL" CERTIFICATION.

DRAWING LIST

E0.0	ELECTRICAL SYMBOL LEGEND AND LIGHTING FIXTURE SCHEDULE
E1.0	ELECTRICAL SITE PLAN (NORTH) - EXISTING & DEMOLITION
E1.1	ELECTRICAL SITE PLAN (NORTH) - NEW CONSTRUCTION
E1.2	ELECTRICAL SITE PLAN (SOUTH) - NEW CONSTRUCTION
E2.0	POWER ONE-LINE DIAGRAM - EXISTING 'MCC-15'
E2.1	HEADWORKS PLAN (UPPER LEVEL) - ELECTRICAL DEMOLITION
E2.2	HEADWORKS PLAN (LOWER LEVEL) - ELECTRICAL DEMOLITION
E2.3	HEADWORKS PLAN (UPPER LEVEL) - ELECTRICAL
E2.4	HEADWORKS PLAN (LOWER LEVEL) - ELECTRICAL
E3.0	POWER ONE-LINE DIAGRAM - EXISTING 'MCC-14'
E3.1	PRIMARY CLARIFIER PUMP BUILDING PLAN - ELECTRICAL DEMOLITION
E3.2	ENLARGED ELECTRICAL ENCLOSURES (SF-MCC & EQ-MCC)
E3.3	POWER ONE-LINE DIAGRAM - NEW 'MCC-15'
E3.4	POWER ONE-LINE DIAGRAM - NEW 'MCC-15' (CONTINUED)
E3.5	PUMP BLDG. AND MOVING BELT FILTER PLAN - POWER & LIGHTING
E4.0	POWER ONE-LINE DIAGRAM - NEW 'MCC-16'
E4.1	EQUALIZATION TANK PLAN - ELECTRICAL
E5.0	PANEL SCHEDULES
E5.1	PANEL SCHEDULES
E6.1	LOCAL CONTROL PANEL SCHEDULES
E7.0	ELECTRICAL DETAILS
E7.1	POWER ONE-LINE DIAGRAM - EXISTING 'MCC-9000'
E7.2	IN-PLANT PUMP STATION CONTROL PANEL LAYOUT

BID DOCUMENTS

IF THIS BAR DOES NOT MEASURE 1" THEN DRAWING HAS BEEN REDUCED SCALE ACCORDINGLY 0 1"

CARASTRO & ASSOCIATES, INC.
CONSULTING ENGINEERS EB-0001160
2609 W. DE LEON STREET TAMPA, FLORIDA 33609
TELEPHONE: (813) 874-9494 FAX: (813) 874-9794

King ENGINEERING ASSOCIATES, INC.
4921 Memorial Highway
One Memorial Center, Suite 300
Tampa, Florida 33634
Phone 813 880-8881
Fax 813 880-8882
www.kingengineering.com
Engineering License #2610

ELECTRICAL ENGINEER: PAUL S. CARASTRO, PE# 45830

RECORD DRAWINGS

SURVEYED BY: DRAWN BY:
REVIEWED BY: PROJECT ENGINEER DATE
APPROVED BY: CITY ENGINEER MICHAEL D. QUILLEN, P.E. # 33721 DATE

REVISION	BY	DATE

CITY OF CLEARWATER, FLORIDA
ENGINEERING DEPARTMENT
100 S. MYRTLE AVE.
CLEARWATER, FL 33756

NOTE: CALL 811 SUNSHINE STATE ONE CALL OF FLORIDA www.call811sunshine.com (800) 432-4770 MIN. 48 HOURS BEFORE YOU EXCAVATE

NORTHEAST WRF GRIT REMOVAL, MOVING BELT FILTER AND EQUALIZATION SYSTEM IMPROVEMENTS

ELECTRICAL SYMBOL LEGEND AND LIGHTING FIXTURE SCHEDULE

DWG NAME: 6030-E0.0.dwg	FIELD BOOK:	SURVEYED BY:	SCALE: VERT. N/A
CONTRACT NO.: 15-0045-UT	DATE DRAWN: JULY 2019	DRAWN BY: RFB	HORIZ. AS SHOWN
JOB NO.: 2110-210-002	DESIGNED BY: RFB	CHECKED BY: PSC	SHEET NO.: ## of ##

APPROVED FOR CONSTRUCTION
CITY ENGINEER MICHAEL D. QUILLEN, P.E. # 33721 DATE

© COPYRIGHT 2010 KING ENGINEERING ASSOCIATES, INC. DRAWINGS AND CONCEPTS MAY NOT BE USED OR REPRODUCED WITHOUT WRITTEN PERMISSION CONSENT IS HEREBY GRANTED SPECIFICALLY TO GOVERNMENTAL AGENCIES TO REPRODUCE THIS DOCUMENT IN COMPLIANCE WITH F.S. CHAPTER 119.

P:\-6099\6030\elec\6030-E0.0.dwg, August 21, 2019 8:42 AM, RICHARD BARBEITO

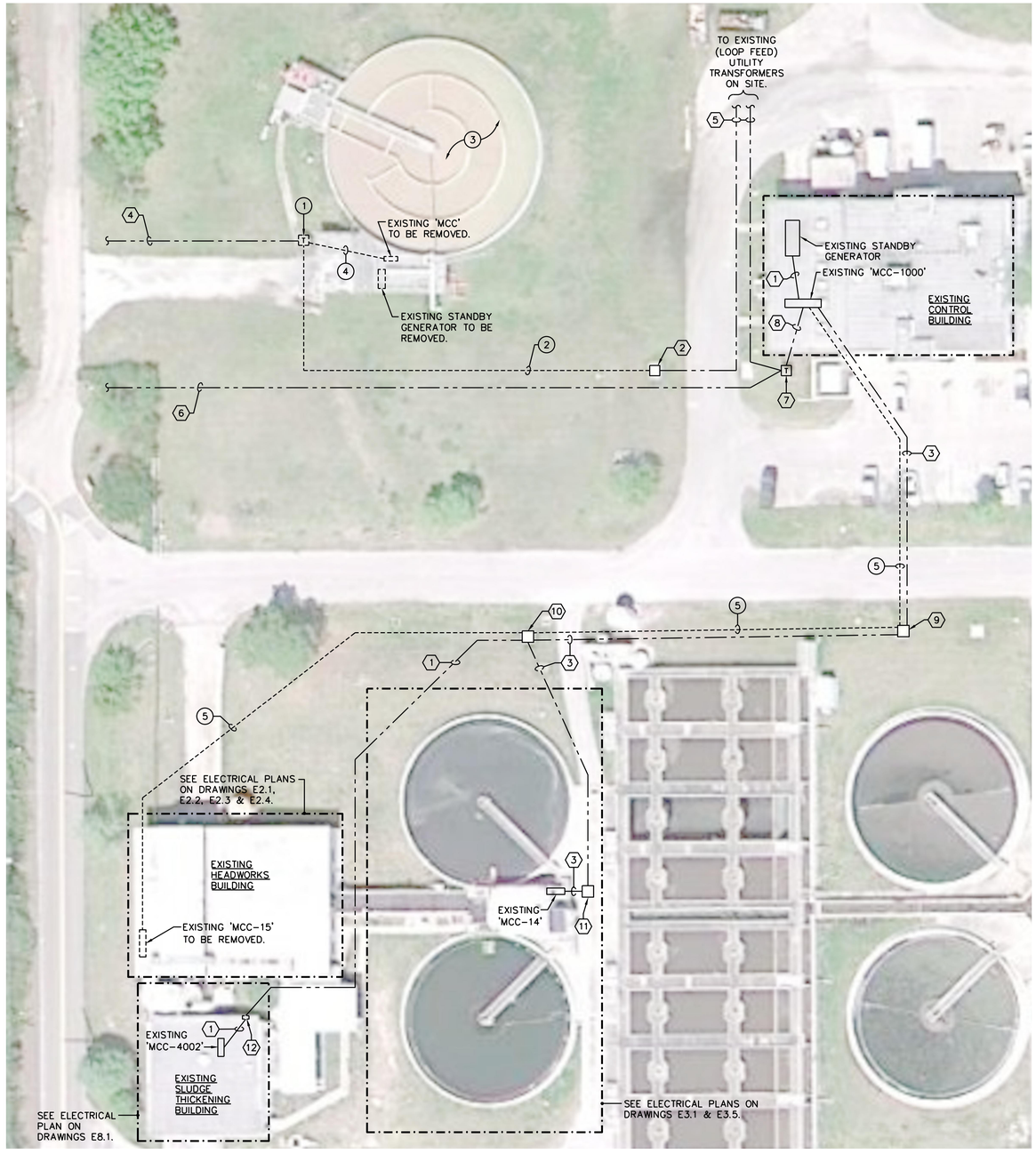

ELECTRICAL SITE PLAN (NORTH) – EXISTING & DEMOLITION

GENERAL NOTES:

1. THIS DRAWING IS NOT TO SCALE. CONTRACTOR TO FIELD MEASURE ALL DISTANCES/DIMENSIONS BEFORE NEW INSTALLATION IS EXECUTED.
2. SEE POWER ONE-LINE DIAGRAM ON DRAWING E4.0 FOR ADDITIONAL INFORMATION.
3. SEE ELECTRICAL SYMBOL LEGEND ON DRAWING E0.0 FOR LINE TYPES.
4. VERIFY ALL EXISTING MANHOLE LOCATIONS BEFORE NEW CONDUIT AND CONDUCTORS INSTALLATION IS EXECUTED.
5. SEQUENCE OF WORK TO COINCIDE WITH STRUCTURAL AND MECHANICAL DEMOLITION.

DEMOLITION NOTES:

1. EXISTING (LOOP FEED) UTILITY TRANSFORMER TO BE REMOVED.
2. EXISTING UTILITY PRIMARY CONDUCTORS TO BE REMOVED.
3. ENTIRE STRUCTURE TO BE DEMOLISHED. REMOVE ALL ELECTRICAL GEAR, PANELBOARDS, RECEPTACLES, MOTORS, DISCONNECT SWITCHES, LIGHTING, CONDUIT AND WIRE, OUTLET BOXES, ETC. VERIFY LOCATIONS AND QUANTITIES OF ELECTRICAL EQUIPMENT AND WIRING AT THE SITE. CONDUIT TO BE REMOVED COMPLETELY. ALL MATERIALS REMOVED SHALL BE DISPOSED LEGALLY BY THE CONTRACTOR.
4. EXISTING SECONDARY SERVICE ENTRANCE CONDUIT AND CONDUCTORS TO BE REMOVED.
5. EXISTING 3 NO. 1/0 AND 1 NO. 4 E.G. – 2"C. TO BE REMOVED.

DRAWING NOTES:

1. EXISTING CONDUIT AND CONDUCTORS TO REMAIN.
2. EXISTING UTILITY (UNDERGROUND) PULL BOX TO REMAIN.
3. EXISTING 3 NO. 2/0 AND 1 NO. 4 E.G. – 2"C.
4. EXISTING UTILITY PRIMARY 'A' CONDUCTORS TO REMAIN.
5. EXISTING UTILITY PRIMARY LOOP CONDUCTORS TO REMAIN.
6. EXISTING UTILITY PRIMARY 'B' CONDUCTORS TO REMAIN.
7. EXISTING (LOOP FEED) UTILITY TRANSFORMER FOR EXISTING CONTROL BUILDING.
8. EXISTING SECONDARY SERVICE ENTRANCE CONDUIT AND CONDUCTORS TO EXISTING 'MCC-1000' IN CONTROL BUILDING.
9. EXISTING MANHOLE 'MH-1' TO REMAIN.
10. EXISTING MANHOLE 'MH-2' TO REMAIN.
11. EXISTING MANHOLE 'MH-2A' TO REMAIN.
12. EXISTING ENCLOSED CIRCUIT BREAKER (ECB) TO REMAIN.

LINE LEGEND

—— - - ——	(LIGHT) EXISTING (BELOW GRADE) TO REMAIN
————	(LIGHT) EXISTING TO REMAIN
- - - - - - - -	(DASHED) TO BE REMOVED

BID DOCUMENTS

IF THIS BAR DOES NOT MEASURE 1" THEN DRAWING HAS BEEN REDUCED SCALE ACCORDINGLY 0 1"

CARASTRO & ASSOCIATES, INC.
CONSULTING ENGINEERS EB-0001160
2609 W. DE LEON STREET TAMPA, FLORIDA 33609
TELEPHONE: (813) 874-9494 FAX: (813) 874-9794

King
ENGINEERING ASSOCIATES, INC.
4921 Memorial Highway
One Memorial Center, Suite 300
Tampa, Florida 33634
Phone 813 880-8881
Fax 813 880-8882
www.kingengineering.com
Engineering License #2610

ELECTRICAL ENGINEER: PAUL S. CARASTRO, PE# 45830

© COPYRIGHT 2019 KING ENGINEERING ASSOCIATES, INC. DRAWINGS AND CONCEPTS MAY NOT BE USED OR REPRODUCED WITHOUT WRITTEN PERMISSION. CONSENT IS HEREBY GRANTED SPECIFICALLY TO GOVERNMENTAL AGENCIES TO REPRODUCE THIS DOCUMENT IN COMPLIANCE WITH F.S. CHAPTER 119.

P:\-6099\6030\elec\6030-E1.0.dwg, March 26, 2020 3:44 PM, RICHARD BARBEITO

RECORD DRAWINGS
SURVEYED BY: DRAWN BY:
REVIEWED BY: PROJECT ENGINEER DATE
APPROVED BY: CITY ENGINEER MICHAEL D. QUILLEN, P.E. # 33721 DATE

REVISION	BY	DATE

CITY OF CLEARWATER, FLORIDA
ENGINEERING DEPARTMENT
100 S. MYRTLE AVE.
CLEARWATER, FL 33756

INVESTIGATE BEFORE YOU EXCAVATE CALL 811 SUNSHINE STATE ONE CALL OF FLORIDA www.oof/sunshine.com (800) 432-4770 MIN. 48 HOURS BEFORE YOU EXCAVATE

NORTHEAST WRF GRIT REMOVAL, MOVING BELT FILTER AND EQUALIZATION SYSTEM IMPROVEMENTS

ELECTRICAL SITE PLAN (NORTH) - EXISTING & DEMOLITION

DWG NAME: 6030-E1.0.DWG	FIELD BOOK:	SURVEYED BY:	SCALE: VERT. N/A
CONTRACT NO.: 15-0045-UT	DATE DRAWN: JULY 2019	DRAWN BY: RFB	HORIZ. AS SHOWN
JOB NO.: 2110-210-002	DESIGNED BY: RFB	CHECKED BY: PSC	SHEET NO.: ## of ##

APPROVED FOR CONSTRUCTION
CITY ENGINEER MICHAEL D. QUILLEN, P.E. # 33721 DATE

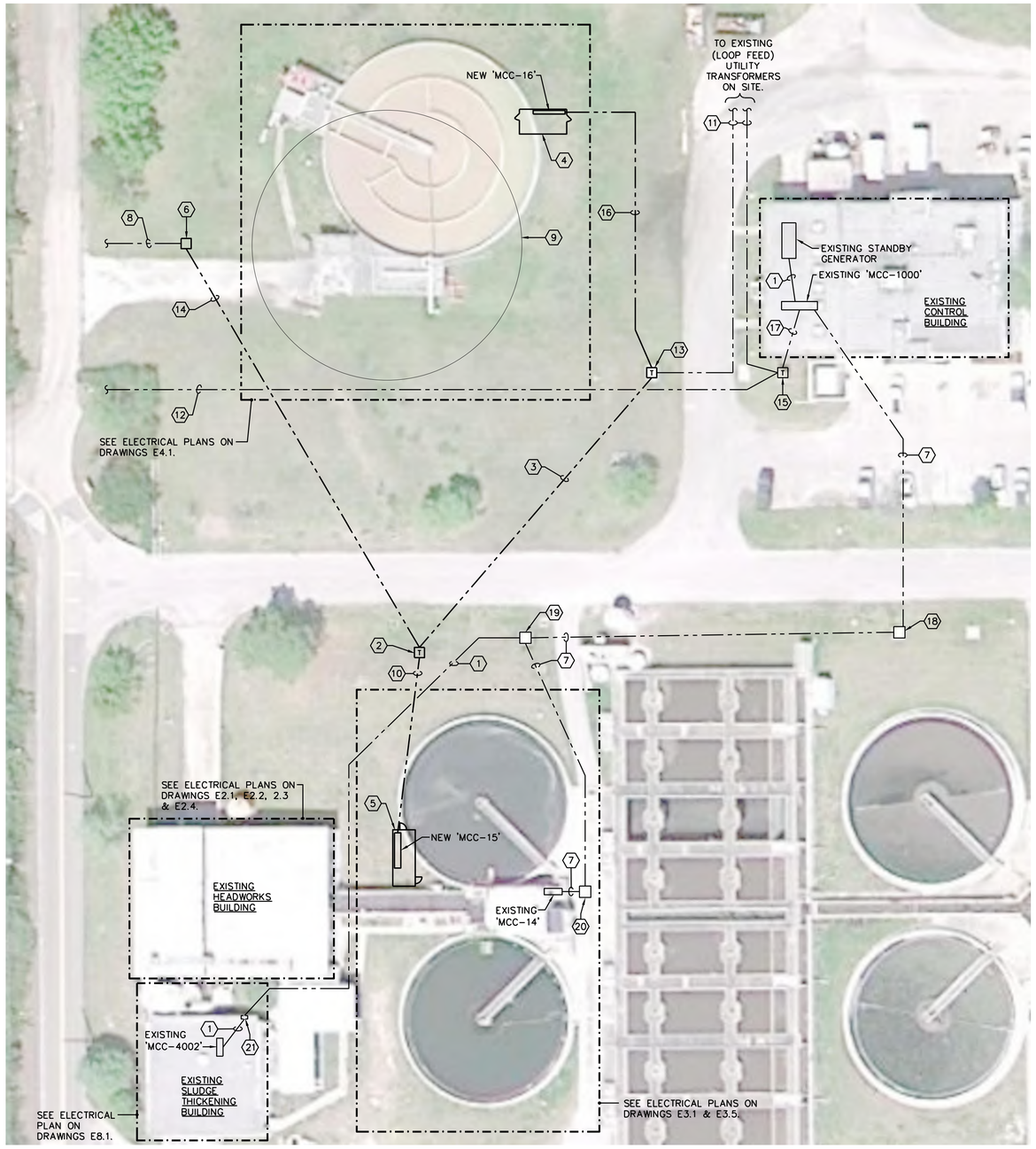

ELECTRICAL SITE PLAN (NORTH) – NEW CONSTRUCTION

GENERAL NOTES:

1. THIS DRAWING IS NOT TO SCALE. CONTRACTOR TO FIELD MEASURE ALL DISTANCES/DIMENSIONS BEFORE NEW INSTALLATION IS EXECUTED.
2. SEE POWER ONE-LINE DIAGRAM ON DRAWING E4.0 FOR ADDITIONAL INFORMATION.
3. SEE ELECTRICAL SYMBOL LEGEND ON DRAWING E0.0 FOR LINE TYPES.

DRAWING NOTES:

1. EXISTING CONDUIT AND CONDUCTORS TO REMAIN.
2. NEW (LOOP FEED) UTILITY TRANSFORMER FOR NEW ELECTICAL ENCLOSURE (SF-MCC). SEE POWER ONE-LINE DIAGRAM ON DRAWING E4.0.
3. NEW UTILITY PRIMARY CONDUIT & CONDUCTORS.
4. NEW PREFABRICATED ELECTRICAL ENCLOSURE (MCC-EQ). SEE ENLARGED ELECTRICAL ENCLOSURE LAYOUT ON DRAWING E3.2.
5. NEW PREFABRICATED ELECTRICAL ENCLOSURE (MCC-SF). SEE ENLARGED ELECTRICAL ENCLOSURE LAYOUT ON DRAWING E3.2.
6. NEW UTILITY (UNDERGROUND) MANHOLE.
7. EXISTING 3 NO. 2/0 AND 1 NO. 4 E.G. – 2"C.
8. EXISTING UTILITY PRIMARY 'A' CONDUCTORS.
9. NEW EQUALIZATION TANK LOCATION.
10. NEW SECONDARY SERVICE ENTRANCE CONDUIT AND CONDUCTORS TO NEW MCC-15 IN NEW ELECTRICAL ENCLOSURE (SF-MCC). SEE POWER ONE-LINE DIAGRAM ON DRAWING E4.0.
11. EXISTING UTILITY PRIMARY LOOP CONDUCTORS.
12. EXISTING UTILITY PRIMARY 'B' CONDUCTORS.
13. NEW (LOOP FEED) UTILITY TRANSFORMER FOR NEW ELECTRICAL ENCLOSURE (MCC-EQ). SEE POWER ONE-LINE DIAGRAM ON DRAWING E4.0.
14. NEW UTILITY PRIMARY 'A' CONDUCTORS (EXTENDED) TO NEW (LOOP FEED) TRANSFORMER. SEE POWER ONE-LINE DIAGRAM ON DRAWING E4.0.
15. EXISTING (LOOP FEED) UTILITY TRANSFORMER FOR EXISTING CONTROL BUILDING.
16. NEW SECONDARY SERVICE ENTRANCE CONDUIT AND CONDUCTORS TO NEW MCC-16 IN NEW ELECTRICAL ENCLOSURE (MCC-EQ).
17. EXISTING SECONDARY SERVICE ENTRANCE CONDUIT AND CONDUCTORS TO EXISTING 'MCC-1000' IN CONTROL BUILDING.
18. EXISTING MANHOLE 'MH-1'.
19. EXISTING MANHOLE 'MH-2'.
20. EXISTING MANHOLE 'MH-2A'.
21. EXISTING ENCLOSED CIRCUIT BREAKER (ECB).

LINE LEGEND

- (BELOW) NEW (BELOW GRADE) CONSTRUCTION
- (BOLD) NEW CONSTRUCTION
- (LIGHT) EXISTING TO REMAIN

BID DOCUMENTS

IF THIS BAR DOES NOT MEASURE 1" THEN DRAWING HAS BEEN REDUCED SCALE ACCORDINGLY 0 1"

CARASTRO & ASSOCIATES, INC.
CONSULTING ENGINEERS EB-0001160
2609 W. DE LEON STREET TAMPA, FLORIDA 33609
TELEPHONE: (813) 874-9494 FAX: (813) 874-9794

King ENGINEERING ASSOCIATES, INC.
4921 Memorial Highway
One Memorial Center, Suite 300
Tampa, Florida 33634
Phone 813 880-8881
Fax 813 880-8882
www.kingengineering.com
Engineering License #2610

ELECTRICAL ENGINEER: PAUL S. CARASTRO, PE# 45830

RECORD DRAWINGS

SURVEYED BY: DRAWN BY:
REVIEWED BY: PROJECT ENGINEER DATE
APPROVED BY: CITY ENGINEER MICHAEL D. QUILLEN, P.E. # 33721 DATE

REVISION	BY	DATE

CITY OF CLEARWATER, FLORIDA
ENGINEERING DEPARTMENT
100 S. MYRTLE AVE.
CLEARWATER, FL 33756

WHENEVER BEFORE YOU EXCAVATE CALL 811 SUNSHINE STATE ONE CALL OF FLORIDA www.call811sunshine.com (800) 432-4770 MIN. 48 HOURS BEFORE YOU EXCAVATE

NORTHEAST WRF GRIT REMOVAL, MOVING BELT FILTER AND EQUALIZATION SYSTEM IMPROVEMENTS

ELECTRICAL SITE PLAN (NORTH) - NEW CONSTRUCTION

DWG NAME: 6030-E1.1.DWG	FIELD BOOK:	SURVEYED BY:	SCALE: VERT. N/A
CONTRACT NO.: 15-0045-UT	DATE DRAWN: JULY 2019	DRAWN BY: RFB	HORIZ. AS SHOWN
JOB NO.: 2110-210-002	DESIGNED BY: RFB	CHECKED BY: PSC	SHEET NO.: ## of ##

APPROVED FOR CONSTRUCTION
CITY ENGINEER MICHAEL D. QUILLEN, P.E. # 33721 DATE

© COPYRIGHT 2019 KING ENGINEERING ASSOCIATES, INC. DRAWINGS AND CONCEPTS MAY NOT BE USED OR REPRODUCED WITHOUT WRITTEN PERMISSION. CONSENT IS HEREBY GRANTED SPECIFICALLY TO GOVERNMENTAL AGENCIES TO REPRODUCE THIS DOCUMENT IN COMPLIANCE WITH F.S. CHAPTER 119.

P:\-6099\6030\elec\6030-E1.1.dwg, August 21, 2019 8:44 AM, RICHARD BARBEITO

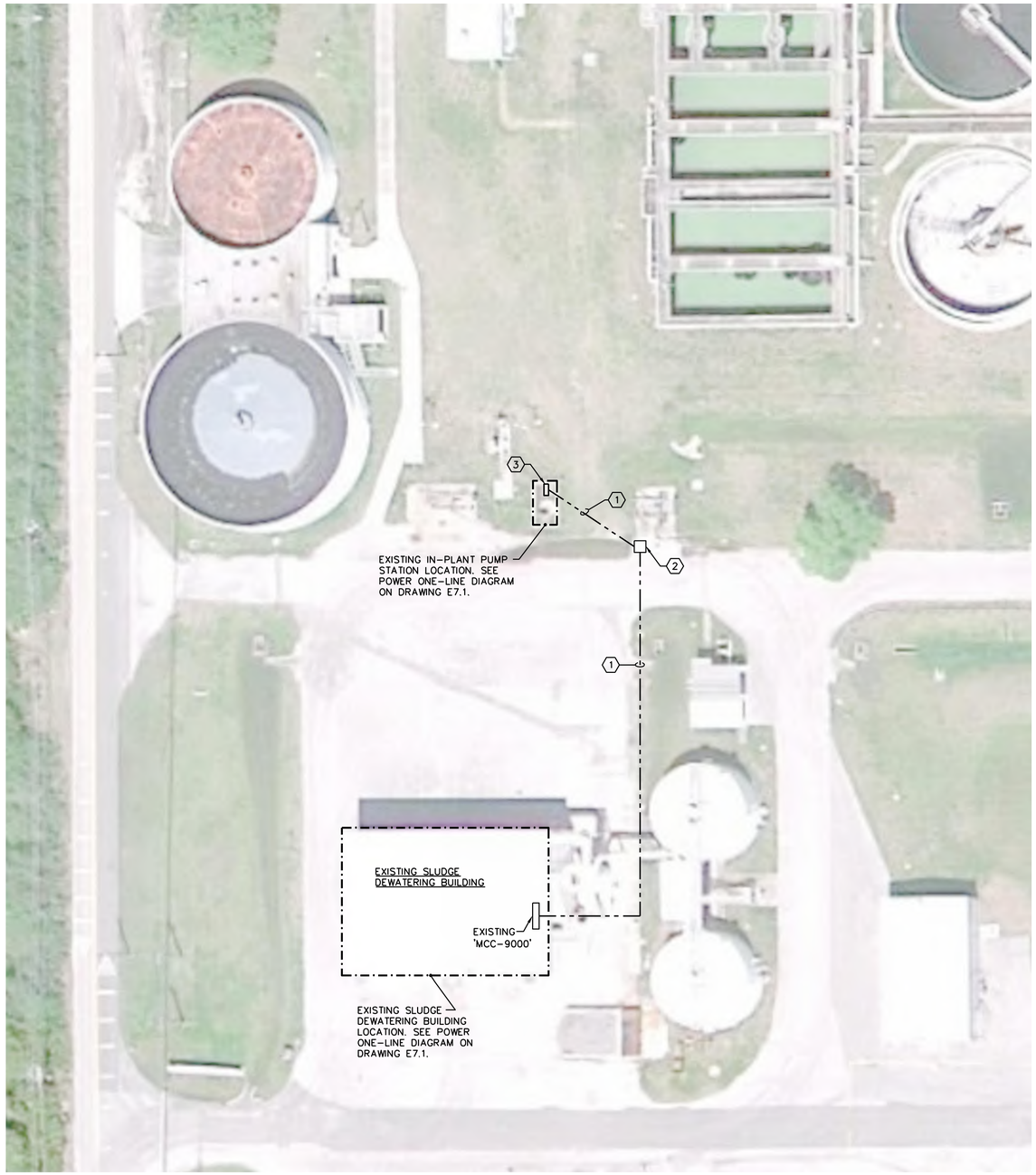

ELECTRICAL SITE PLAN (SOUTH) – NEW CONSTRUCTION

GENERAL NOTES:

1. THIS DRAWING IS NOT TO SCALE. CONTRACTOR TO FIELD MEASURE ALL DISTANCES/DIMENSIONS BEFORE NEW INSTALLATION IS EXECUTED.
2. SEE ELECTRICAL SYMBOL LEGEND ON DRAWING E0.0 FOR LINE TYPES.

DRAWING NOTES:

1. SEE POWER ONE-LINE DIAGRAM ON DRAWING E7.1 FOR CONDUIT AND CONDUCTOR SIZES.
2. EXISTING MANHOLE 'MH-9' TO REMAIN.
3. NEW IN-PLANT PUMP STATION CONTROL PANEL. SEE PANEL ELEVATION LAYOUT ON DRAWING E7.2.

LINE LEGEND	
— - - —	(BELOW) NEW (BELOW GRADE) CONSTRUCTION
———	(BOLD) NEW CONSTRUCTION
———	(LIGHT) EXISTING TO REMAIN

BID DOCUMENTS

IF THIS BAR DOES NOT MEASURE 1" THEN DRAWING HAS BEEN REDUCED SCALE ACCORDINGLY 0 1"

CARASTRO & ASSOCIATES, INC.
CONSULTING ENGINEERS EB-0001160
2609 W. DE LEON STREET TAMPA, FLORIDA 33609
TELEPHONE: (813) 874-9494 FAX: (813) 874-9794

King
ENGINEERING ASSOCIATES, INC.
4921 Memorial Highway
One Memorial Center, Suite 300
Tampa, Florida 33634
Phone 813 880-8881
Fax 813 880-8882
www.kingengineering.com
Engineering License #2610

ELECTRICAL ENGINEER: PAUL S. CARASTRO, PE# 45830

RECORD DRAWINGS
SURVEYED BY: DRAWN BY:
REVIEWED BY: PROJECT ENGINEER DATE
APPROVED BY: CITY ENGINEER MICHAEL D. QUILLEN, P.E. # 33721 DATE

REVISION	BY	DATE

CITY OF CLEARWATER, FLORIDA
ENGINEERING DEPARTMENT
100 S. MYRTLE AVE.
CLEARWATER, FL 33756

INVESTIGATE BEFORE YOU EXCAVATE
CALL 811
SUNSHINE STATE ONE CALL OF FLORIDA
www.callsunshine.com
(800) 432-4770
MIN. 48 HOURS BEFORE YOU EXCAVATE

NORTHEAST WRF GRIT REMOVAL, MOVING BELT FILTER AND EQUALIZATION SYSTEM IMPROVEMENTS

ELECTRICAL SITE PLAN (SOUTH) - NEW CONSTRUCTION

DWG NAME: 6030-E1.1.DWG	FIELD BOOK:	SURVEYED BY:	SCALE: VERT. N/A
CONTRACT NO.: 15-0045-UT	DATE DRAWN: JULY 2019	DRAWN BY: RFB	HORIZ. AS SHOWN
JOB NO.: 2110-210-002	DESIGNED BY: RFB	CHECKED BY: PSC	SHEET NO.: ## of ##

APPROVED FOR CONSTRUCTION
CITY ENGINEER MICHAEL D. QUILLEN, P.E. # 33721 DATE

© COPYRIGHT 2010 KING ENGINEERING ASSOCIATES, INC. DRAWINGS AND CONCEPTS MAY NOT BE USED OR REPRODUCED WITHOUT WRITTEN PERMISSION CONSENT IS HEREBY GRANTED SPECIFICALLY TO GOVERNMENTAL AGENCIES TO REPRODUCE THIS DOCUMENT IN COMPLIANCE WITH F.S. CHAPTER 119.

P:\-6099\6030\elec\6030-E1.2.dwg, August 21, 2019 8:45 AM, RICHARD BARBEITO

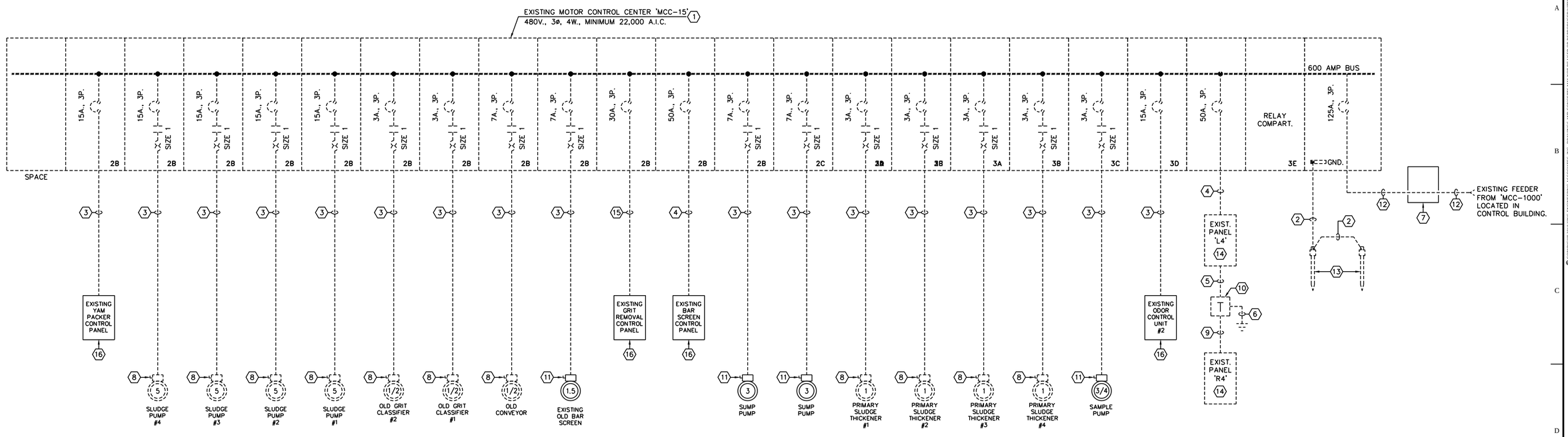

POWER ONE-LINE DIAGRAM – EXISTING 'MCC-15'

NOT TO SCALE

LOAD SUMMARY

LOAD DESCRIPTION	KVA
SLUDGE PUMPS (REMOVED)	(24.20)
PRIMARY SLUDGE THICKENER (REMOVED)	(5.72)
OLD GRIT CLASSIFIERS (REMOVED)	(1.60)
OLD CONVEYOR (REMOVED)	(0.80)
OLD BAR SCREEN (REMOVED)	(2.07)
SUMP PUMPS (REMOVED)	(7.64)
YAM PACKER CONTROL PANEL (REMOVED)	(4.98)
GRIT REMOVAL CONTROL PANEL (REMOVED)	(9.96)
BAR SCREEN CONTROL PANEL (REMOVED)	(16.60)
EXISTING ODOR CONTROL (REMOVED)	(4.98)
PANEL 'L4' (REMOVED)	(24.93)
TOTAL (REMOVED)	(103.48)

103.48 KVA @ 480V, 3ø = 124.67 AMPS.

DRAWING NOTES:

1. EXISTING MOTOR CONTROL CENTER TO BE REMOVED.
2. EXISTING NO. 6 AWG GROUNDING CONDUCTOR TO BE REMOVED.
3. EXISTING 3 NO. 12 AND 1 NO. 12 E.G. – 3/4"C. TO BE REMOVED.
4. EXISTING 3 NO. 8 AND 1 NO. 10 E.G. – 3/4"C. TO BE REMOVED.
5. EXISTING 2 NO. 12 AND 1 NO. 12 G.C. – 3/4"C. TO BE REMOVED.
6. EXISTING NO. 8 GROUND CONDUCTOR TO BE REMOVED.
7. EXISTING MANHOLE 'MH-2' TO REMAIN.
8. EXISTING 30A., 3P., DISCONNECT SWITCH TO BE REMOVED.
9. EXISTING CONDUIT AND CONDUCTORS TO BE REMOVED.
10. EXISTING 10 KVA 480-120/240V., 1PH., 3W. TRANSFORMER TO BE REMOVED.
11. EXISTING 30A., 3P., DISCONNECT SWITCH TO REMAIN.
12. EXISTING 3 NO. 2/0 AND 1 NO. 4 E.G. – 2"C. TO BE REMOVED.
13. EXISTING GROUND RODS TO BE REMOVED.
14. EXISTING PANELBOARD TO BE REMOVED.
15. EXISTING 3 NO. 10 AND 1 NO. 12 E.G. – 3/4"C. TO BE REMOVED.
16. EXISTING CONTROL PANEL TO REMAIN.

LINE LEGEND

————	EXISTING TO REMAIN
- - - - - -	TO BE REMOVED

BID DOCUMENTS

IF THIS BAR DOES NOT MEASURE 1" THEN DRAWING HAS BEEN REDUCED SCALE ACCORDINGLY 0 1"

CARASTRO & ASSOCIATES, INC.
CONSULTING ENGINEERS EB-0001160
2609 W. DE LEON STREET TAMPA, FLORIDA 33609
TELEPHONE: (813) 874-9494 FAX: (813) 874-9794

King ENGINEERING ASSOCIATES, INC.
4921 Memorial Highway
One Memorial Center, Suite 300
Tampa, Florida 33634
Phone 813 880-8881
Fax 813 880-8882
www.kingengineering.com
Engineering License #2610

ELECTRICAL ENGINEER: PAUL S. CARASTRO, PE# 45830

RECORD DRAWINGS
SURVEYED BY: DRAWN BY:
REVIEWED BY: PROJECT ENGINEER DATE
APPROVED BY: CITY ENGINEER MICHAEL D. QUILLEN, P.E. # 33721 DATE

REVISION	BY	DATE

CITY OF CLEARWATER, FLORIDA
ENGINEERING DEPARTMENT
100 S. MYRTLE AVE.
CLEARWATER, FL 33756

INVESTIGATE BEFORE YOU EXCAVATE
CALL 811
SUNSHINE STATE ONE CALL OF FLORIDA
www.sc811sunshine.com
(800) 432-4770
MIN. 48 HOURS BEFORE YOU EXCAVATE

NORTHEAST WRF GRIT REMOVAL, MOVING BELT FILTER AND EQUALIZATION SYSTEM IMPROVEMENTS

POWER ONE-LINE DIAGRAM - EXISTING 'MCC-15'

DWG NAME: 6030-E2.0.DWG	FIELD BOOK:	SURVEYED BY:	SCALE: VERT. N/A
CONTRACT NO.: 15-0045-UT	DATE DRAWN: JULY 2019	DRAWN BY: RFB	HORIZ. AS SHOWN
JOB NO.: 2110-210-002	DESIGNED BY: RFB	CHECKED BY: PSC	SHEET NO.: ## of ##

APPROVED FOR CONSTRUCTION
CITY ENGINEER MICHAEL D. QUILLEN, P.E. # 33721 DATE

© COPYRIGHT 2010 KING ENGINEERING ASSOCIATES, INC. DRAWINGS AND CONCEPTS MAY NOT BE USED OR REPRODUCED WITHOUT WRITTEN PERMISSION CONSENT IS HEREBY GRANTED SPECIFICALLY TO GOVERNMENTAL AGENCIES TO REPRODUCE THIS DOCUMENT IN COMPLIANCE WITH F.S. CHAPTER 119.

P:\-6099\6030\elec\6030-E2.0.dwg, August 21, 2019 8:45 AM, RICHARD BARBEITO

E2.1

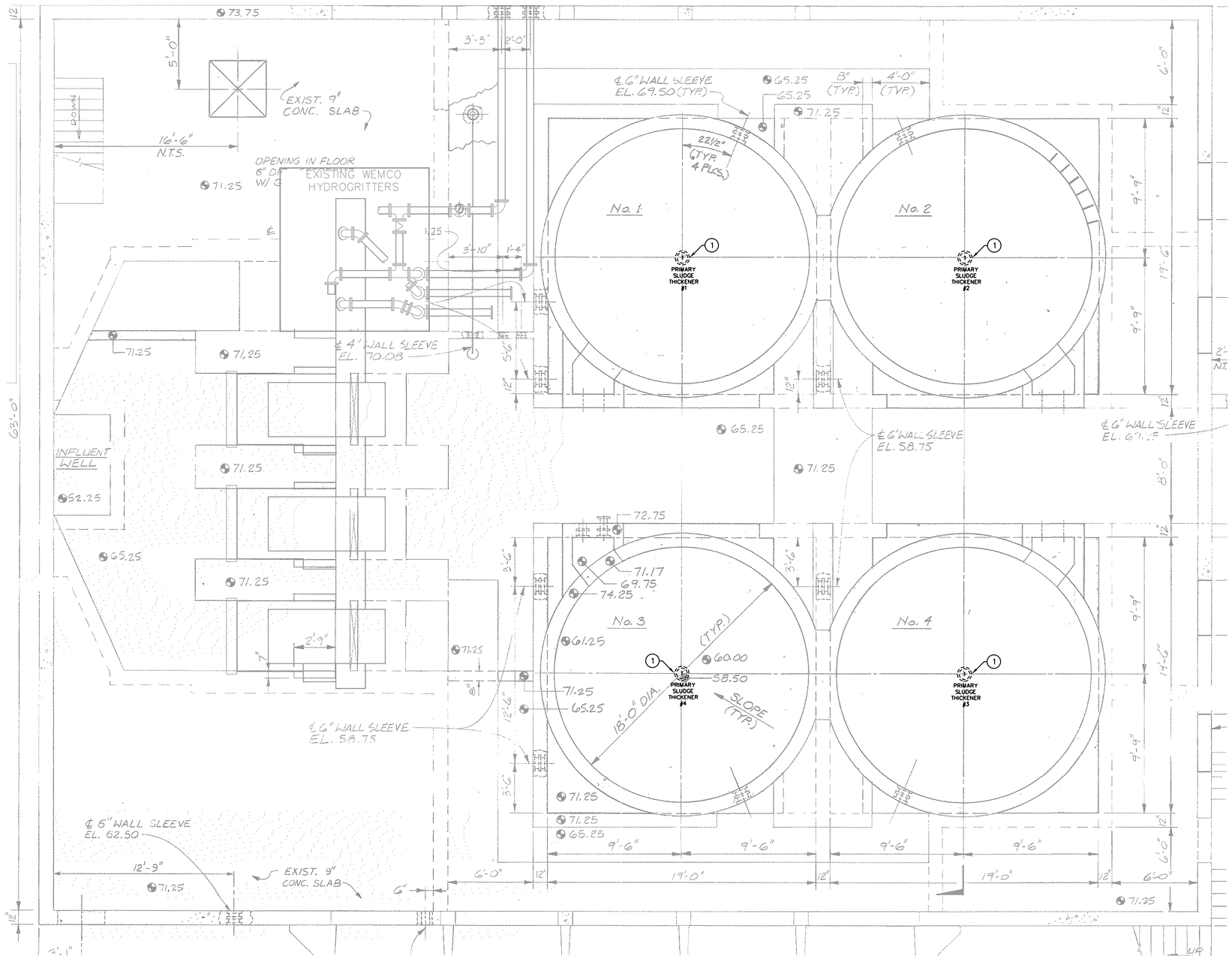

HEADWORKS PLAN (UPPER LEVEL) – ELECTRICAL DEMOLITION

GENERAL NOTES:

1. THIS DRAWING IS NOT TO SCALE. CONTRACTOR TO FIELD MEASURE ALL DISTANCES/DIMENSIONS BEFORE NEW INSTALLATION IS EXECUTED.
2. REFER TO DRAWING E0.0 FOR GENERAL DEMOLITION NOTES.

DRAWING NOTES:

(1) EXISTING PRIMARY SLUDGE THICKENER TO BE REMOVED.

© COPYRIGHT 2019 KING ENGINEERING ASSOCIATES, INC. DRAWINGS AND CONCEPTS MAY NOT BE USED OR REPRODUCED WITHOUT WRITTEN PERMISSION CONSENT IS HEREBY GRANTED SPECIFICALLY TO GOVERNMENTAL AGENCIES TO REPRODUCE THIS DOCUMENT IN COMPLIANCE WITH F.S. CHAPTER 119.

BID DOCUMENTS

IF THIS BAR DOES NOT MEASURE 1" THEN DRAWING HAS BEEN REDUCED SCALE ACCORDINGLY (0 – 1")

CARASTRO & ASSOCIATES, INC.
CONSULTING ENGINEERS EB-0001160
2609 W. DE LEON STREET TAMPA, FLORIDA 33609
TELEPHONE: (813) 874-9494 FAX: (813) 874-9794

King
ENGINEERING ASSOCIATES, INC.
4921 Memorial Highway
One Memorial Center, Suite 300
Tampa, Florida 33634
Phone 813 880-8881
Fax 813 880-8882
www.kingengineering.com
Engineering License #2610

ELECTRICAL ENGINEER: PAUL S. CARASTRO, PE# 45830

RECORD DRAWINGS

SURVEYED BY: | DRAWN BY:
REVIEWED BY:
PROJECT ENGINEER | DATE
APPROVED BY:
CITY ENGINEER MICHAEL D. QUILLEN, P.E. # 33721 | DATE

REVISION	BY	DATE

CITY OF CLEARWATER, FLORIDA
ENGINEERING DEPARTMENT
100 S. MYRTLE AVE.
CLEARWATER, FL 33756

INVESTIGATE BEFORE YOU EXCAVATE
CALL 811
SUNSHINE STATE ONE CALL OF FLORIDA
www.callsunshine.com
(800) 432-4770
MIN. 48 HOURS BEFORE YOU EXCAVATE

NORTHEAST WRF GRIT REMOVAL, MOVING BELT FILTER AND EQUALIZATION SYSTEM IMPROVEMENTS

HEADWORKS PLAN (UPPER LEVEL) - ELECTRICAL DEMOLITION

DWG NAME: 6030-E2.1.dwg	FIELD BOOK:	SURVEYED BY:	SCALE: VERT. N/A
CONTRACT NO.: 15-0045-UT	DATE DRAWN: JULY 2019	DRAWN BY: RFB	HORIZ. AS SHOWN
JOB NO.: 2110-210-002	DESIGNED BY: RFB	CHECKED BY: PSC	SHEET NO.: ## of ##

APPROVED FOR CONSTRUCTION
CITY ENGINEER MICHAEL D. QUILLEN, P.E. # 33721 | DATE

P:\-6099\6030\elec\6030-E2.1.dwg, August 21, 2019 8:46 AM, RICHARD BARBEITO

E2.2

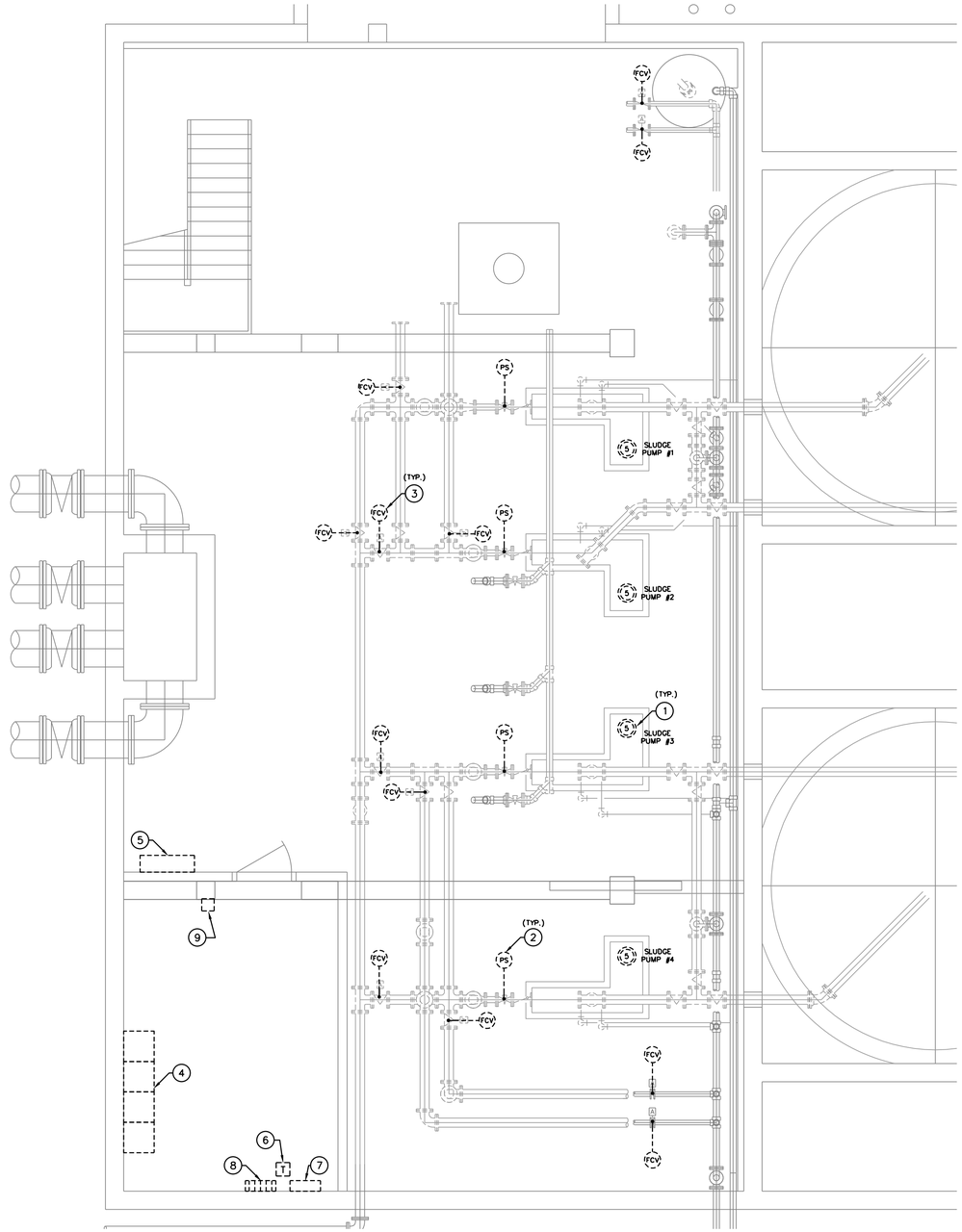

HEADWORKS PLAN (LOWER LEVEL) – ELECTRICAL DEMOLITION

N

GENERAL NOTES:

1. THIS DRAWING IS NOT TO SCALE. CONTRACTOR TO FIELD MEASURE ALL DISTANCES/DIMENSIONS BEFORE NEW INSTALLATION IS EXECUTED.
2. REFER TO DRAWING E0.0 FOR GENERAL DEMOLITION NOTES.

DRAWING NOTES:

1. EXISTING SLUDGE PUMP TO BE REMOVED.
2. EXISTING PRESSURE SWITCH TO BE REMOVED.
3. EXISTING FLOW CONTROL VALVE (FCV) TO BE REMOVED.
4. EXISTING MOTOR CONTROL CENTER 'MCC-15' TO BE REMOVED.
5. EXISTING THICKENED SLUDGE PUMP CONTROL PANEL TO BE REMOVED.
6. EXISTING 10 KVA TRANSFORMER TO BE REMOVED AND REPLACED WITH NEW. SEE RENOVATION DRAWING ON DRAWING E2.4.
7. EXISTING PANELBOARD 'R4' TO BE REMOVED AND REPLACED WITH NEW. SEE RENOVATION DRAWING ON DRAWING E2.4. SEE PANELBOARD SCHEDULE ON DRAWING E5.1.
8. EXISTING PANELBOARD 'L4' TO BE REMOVED AND REPLACED WITH NEW. SEE RENOVATION DRAWING ON DRAWING E2.4. SEE PANELBOARD SCHEDULE ON DRAWING E5.1.
9. EXISTING PICKETT THICKENER TIMER AND SOLINOID BOXES TO BE REMOVED.

© COPYRIGHT 2010 KING ENGINEERING ASSOCIATES, INC. DRAWINGS AND CONCEPTS MAY NOT BE USED OR REPRODUCED WITHOUT WRITTEN PERMISSION CONSENT IS HEREBY GRANTED SPECIFICALLY TO GOVERNMENTAL AGENCIES TO REPRODUCE THIS DOCUMENT IN COMPLIANCE WITH F.S. CHAPTER 119.

BID DOCUMENTS

IF THIS BAR DOES NOT MEASURE 1" THEN DRAWING HAS BEEN REDUCED SCALE ACCORDINGLY 0 1"

CARASTRO & ASSOCIATES, INC.
CONSULTING ENGINEERS EB-0001160
2609 W. DE LEON STREET TAMPA, FLORIDA 33609
TELEPHONE: (813) 874-9494 FAX: (813) 874-9794

King
ENGINEERING ASSOCIATES, INC.
4921 Memorial Highway
One Memorial Center, Suite 300
Tampa, Florida 33634
Phone 813 880-8881
Fax 813 880-8882
www.kingengineering.com
Engineering License #2610

ELECTRICAL ENGINEER: PAUL S. CARASTRO, PE# 45830

RECORD DRAWINGS

SURVEYED BY: DRAWN BY:
REVIEWED BY: PROJECT ENGINEER DATE
APPROVED BY: CITY ENGINEER MICHAEL D. QUILLEN, P.E. # 33721 DATE

REVISION	BY	DATE

CITY OF CLEARWATER, FLORIDA
ENGINEERING DEPARTMENT
100 S. MYRTLE AVE.
CLEARWATER, FL 33756

INVESTIGATE BEFORE YOU EXCAVATE
CALL 811
SUNSHINE STATE ONE CALL OF FLORIDA
www.callsunshine.com
(800) 432-4770
MIN. 48 HOURS BEFORE YOU EXCAVATE

NORTHEAST WRF GRIT REMOVAL, MOVING BELT FILTER AND EQUALIZATION SYSTEM IMPROVEMENTS

HEADWORKS PLAN (LOWER LEVEL) - ELECTRICAL DEMOLITION

DWG NAME: 6030-E2.2.dwg	FIELD BOOK:	SURVEYED BY:	SCALE: VERT. N/A
CONTRACT NO.: 15-0045-UT	DATE DRAWN: JULY 2019	DRAWN BY: RFB	HORIZ. AS SHOWN
JOB NO.: 2110-210-002	DESIGNED BY: RFB	CHECKED BY: PSC	SHEET NO.: ## of ##

APPROVED FOR CONSTRUCTION
CITY ENGINEER MICHAEL D. QUILLEN, P.E. # 33721 DATE

P:\6099\6030\elec\6030-E2.2.dwg, August 21, 2019 8:47 AM, RICHARD BARBEITO

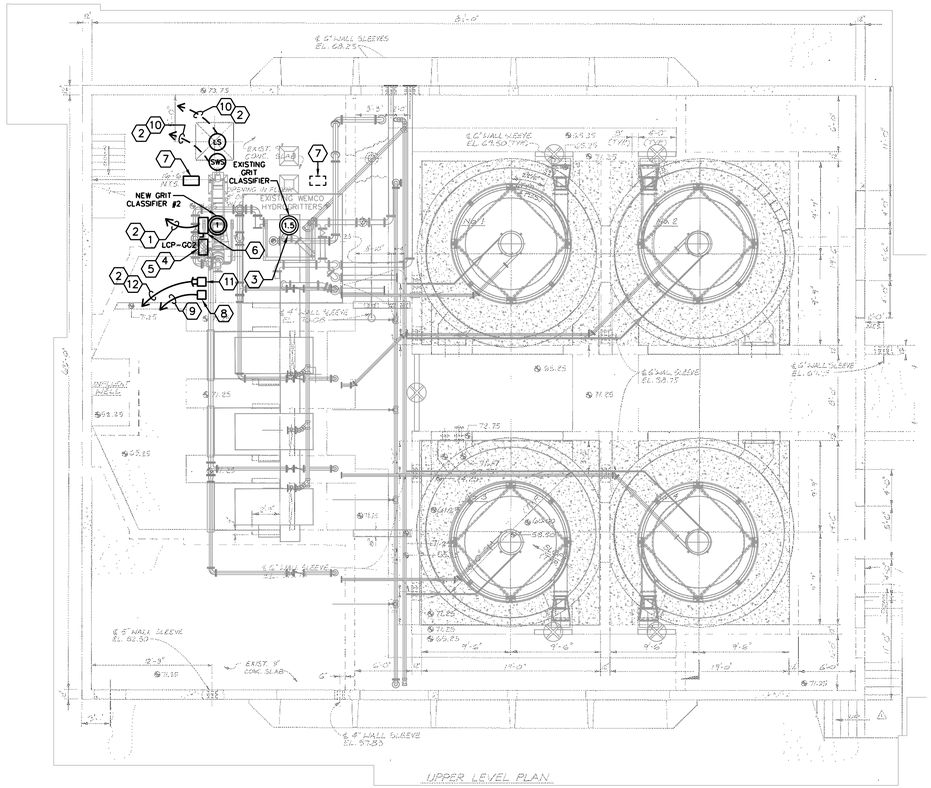

HEADWORKS PLAN (UPPER LEVEL) – ELECTRICAL

GENERAL NOTES:

1. ALL ELECTRICAL EQUIPMENT, DISCONNECT SWITCHES, CONDUIT, JUNCTION BOXES, AND FITTINGS WITHIN INFLUENT STRUCTURE BUILDING TO BE NEMA 9 (EXPLOSION PROOF) RATED.
2. PROVIDE AND INSTALL SEAL-OFF FITTINGS FOR ALL CONDUITS PRIOR TO ENTERING ELECTRICAL BUILDING ENCLOSURE SF-MCC.
3. THIS DRAWING IS NOT TO SCALE. CONTRACTOR TO FIELD MEASURE ALL DISTANCES/DIMENSIONS BEFORE NEW INSTALLATION IS EXECUTED.

DRAWING NOTES:

1. 3 NO. 12 AND 1 NO. 12 E.G. – 3/4"C.
2. TO NEW GRIT CLASSIFIER CONTROL PANEL #2 IN EXISTING ELECTRICAL ROOM, LOWER LEVEL.
3. EXISTING GRIT CLASSIFIER MOTOR TO REMAIN.
4. NEW GRIT CLASSIFIER LOCAL CONTROL PANEL. SEE LOCAL CONTROL PANEL SCHEDULE ON DRAWING E6.1.
5. SEE LOCAL CONTROL PANEL DETAIL #1 & LOCAL CONTROL PANEL ELEVATION #1 ON DRAWING E7.0.
6. NEW 30A., 3P., NEMA (EXPLOSION PROOF) DISCONNECT SWITCH.
7. EXISTING CYCLONE FLOW METER CONTROL PANEL TO BE RELOCATED FROM POSITION SHOWN DASHED TO POSITION SHOWN SOLID. EXTEND (POWER AND CONTROLS) CONDUIT AND CONDUCTORS AS NECESSARY. RE-USE EXISTING UNI-STRUT SUPPORT SYSTEM.
8. NEW SHAFT SPEED SENSOR (0-SPEED SWITCH).
9. 4 NO. #16 TSP (4-20mA) – 3/4"C. TO MCP-15.
10. 3 NO. 16 – 3/4"C.
11. NEW EMERGENCY STOP PUSHBUTTON FOR NEW GRIT CLASSIFIER #2.
12. 4 NO. 12 – 3/4"C.

LINE LEGEND

(BOLD) NEW CONTRUCTION

(LIGHT) EXISTING TO REMAIN

BID DOCUMENTS

IF THIS BAR DOES NOT MEASURE 1" THEN DRAWING HAS BEEN REDUCED SCALE ACCORDINGLY

CARASTRO & ASSOCIATES, INC.
CONSULTING ENGINEERS EB-0001160
2609 W. DE LEON STREET TAMPA, FLORIDA 33609
TELEPHONE: (813) 874-9494 FAX: (813) 874-9794

King ENGINEERING ASSOCIATES, INC.
4921 Memorial Highway
One Memorial Center, Suite 300
Tampa, Florida 33634
Phone 813 880-8881
Fax 813 880-8882
www.kingengineering.com
Engineering License #2610

ELECTRICAL ENGINEER: PAUL S. CARASTRO, PE# 45830

© COPYRIGHT 2010 KING ENGINEERING ASSOCIATES, INC. DRAWINGS AND CONCEPTS MAY NOT BE USED OR REPRODUCED WITHOUT WRITTEN PERMISSION CONSENT IS HEREBY GRANTED SPECIFICALLY TO GOVERNMENTAL AGENCIES TO REPRODUCE THIS DOCUMENT IN COMPLIANCE WITH F.S. CHAPTER 119.

RECORD DRAWINGS

SURVEYED BY: | DRAWN BY:

REVIEWED BY: PROJECT ENGINEER DATE

APPROVED BY: CITY ENGINEER MICHAEL D. QUILLEN, P.E. # 33721 DATE

REVISION	BY	DATE

CITY OF CLEARWATER, FLORIDA
ENGINEERING DEPARTMENT
100 S. MYRTLE AVE.
CLEARWATER, FL 33756

INVESTIGATE BEFORE YOU EXCAVATE
CALL 811
SUNSHINE STATE ONE CALL OF FLORIDA
www.sol.sunshine.com
(800) 432-4770
MIN. 48 HOURS BEFORE YOU EXCAVATE

NORTHEAST WRF GRIT REMOVAL, MOVING BELT FILTER AND EQUALIZATION SYSTEM IMPROVEMENTS

HEADWORKS PLAN (UPPER LEVEL) - ELECTRICAL

DWG NAME: 6030-E2.3.dwg	FIELD BOOK:	SURVEYED BY:	SCALE: VERT. N/A
CONTRACT NO.: 15-0045-UT	DATE DRAWN: JULY 2019	DRAWN BY: RFB	HORIZ. AS SHOWN
JOB NO.: 2110-210-002	DESIGNED BY: RFB	CHECKED BY: PSC	SHEET NO.: ## of ##

APPROVED FOR CONSTRUCTION

CITY ENGINEER MICHAEL D. QUILLEN, P.E. # 33721 DATE

P:\-6099\6030\elec\6030-E2.3.dwg, August 21, 2019 9:52 AM, RICHARD BARBEITO

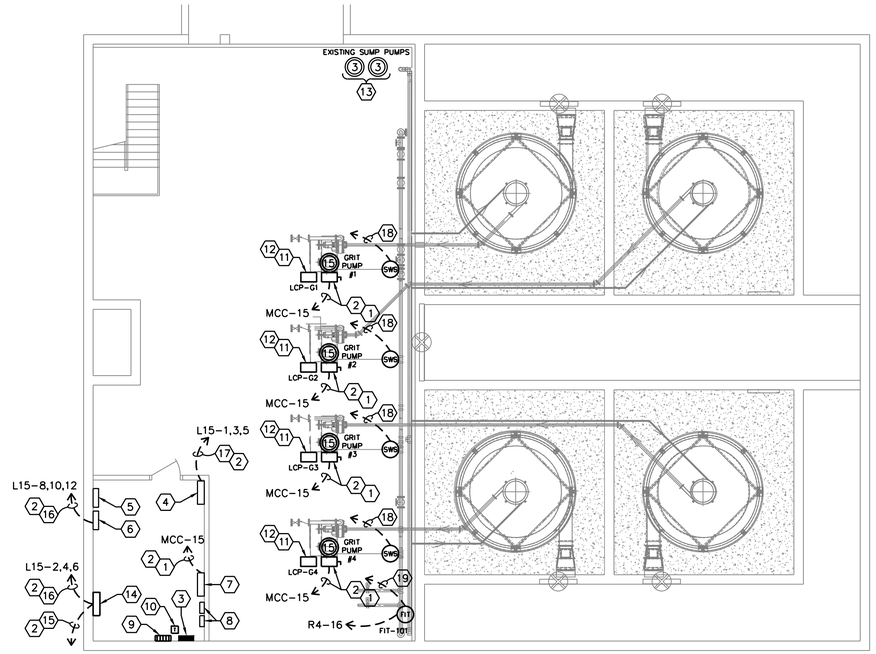

HEADWORKS PLAN (LOWER LEVEL) – ELECTRICAL

GENERAL NOTES:

1. PROVIDE AND INSTALL SEAL-OFF FITTINGS ON ALL CONDUITS PRIOR TO ENTERING ELECTRICAL BUILDING ENCLOSURE SF-MCC.
2. THIS DRAWING IS NOT TO SCALE. CONTRACTOR TO FIELD MEASURE ALL DISTANCES/DIMENSIONS BEFORE NEW INSTALLATION IS EXECUTED.

DRAWING NOTES:

1. SEE POWER ONE-LINE DIAGRAM ON DRAWINGS E3.3 & E3.4 FOR CONDUIT, CONDUCTOR & DISCONNECT SWITCH SIZES.
2. TO NEW ELECTRICAL BUILDING ENCLOSURE SF-MCC.
3. NEW NEMA 4X (316 STAINLESS STEEL) PANEL 'R4' LOCATION. EXTEND AND RECONNECT ALL EXISTING BRANCH CIRCUITS. SEE POWER ONE-LINE DIAGRAM ON DRAWING E3.4 FOR ADDITIONAL INFORMATION.
4. EXISTING GRIT REMOVAL CONTROL PANEL.
5. EXISTING CONTROLS TERMINAL CABINET.
6. EXISTING YAM PACKER CONTROL PANEL.
7. EXISTING BAR SCREEN CONTROL PANEL.
8. EXISTING LEVEL INDICATING TRANSMITTERS.
9. NEW NEMA 4X (316 STAINLESS STEEL) PANEL 'L4'. EXTEND AND RECONNECT ALL EXISTING BRANCH CIRCUITS. SEE POWER ONE-LINE DIAGRAM ON DRAWING E3.4 FOR ADDITIONAL INFORMATION.
10. NEW TRANSFORMER FOR PANEL R4. SEE POWER ONE-LINE DIAGRAM ON DRAWING E3.4 FOR ADDITIONAL INFORMATION.
11. NEW GRIT PUMP CONTROL PANEL. SEE LOCAL CONTROL PANEL SCHEDULE AND DRAWING E6.1.
12. SEE LOCAL CONTROL PANEL DETAIL #2 AND LOCAL CONTROL PANEL ELEVATION #1 ON DRAWING E7.0.
13. EXISTING SUMP PUMPS.
14. NEW GRIT CLASSIFIER CONTROL PANEL #2.
15. 20 NO. 14 – 1 1/2"C. TO MCP-15.
16. 3 NO. 12 & 1 NO. 12 E.G. – 3/4"C.
17. 3 NO. 10 & 1 NO. 10 E.G. – 3/4"C.
18. 3 NO. 16 – 3/4"C. TO MCC-15 (ASSOCIATED MOTOR STARTER). SEAL WATER SOLENOID TO BE INTERLOCKED WITH MOTOR STARTER. SEAL WATER SOLENOID TO OPEN WHEN PUMP IS RUNNING.
19. 2 NO. 18 (4-20mA) TWISTED SHIELDED PAIRS – 3/4"C TO MCP-15.

LINE LEGEND

———	(BOLD) NEW CONTRUCTION
———	(LIGHT) EXISTING TO REMAIN

BID DOCUMENTS

IF THIS BAR DOES NOT MEASURE 1" THEN DRAWING HAS BEEN REDUCED SCALE ACCORDINGLY (0 – 1")

CARASTRO & ASSOCIATES, INC.
CONSULTING ENGINEERS EB-0001160
2609 W. DE LEON STREET TAMPA, FLORIDA 33609
TELEPHONE: (813) 874-9494 FAX: (813) 874-9794

King
ENGINEERING ASSOCIATES, INC.
4921 Memorial Highway
One Memorial Center, Suite 300
Tampa, Florida 33634
Phone 813 880-8881
Fax 813 880-8882
www.kingengineering.com
Engineering License #2610

ELECTRICAL ENGINEER: PAUL S. CARASTRO, PE# 45830

RECORD DRAWINGS

SURVEYED BY: DRAWN BY:
REVIEWED BY: PROJECT ENGINEER DATE
APPROVED BY: CITY ENGINEER MICHAEL D. QUILLEN, P.E. # 33721 DATE

REVISION	BY	DATE

CITY OF CLEARWATER, FLORIDA
ENGINEERING DEPARTMENT
100 S. MYRTLE AVE.
CLEARWATER, FL 33756

INVESTIGATE BEFORE YOU EXCAVATE
CALL 811
SUNSHINE STATE ONE CALL OF FLORIDA
www.callsunshine.com
(800) 432-4770
MIN. 48 HOURS BEFORE YOU EXCAVATE

NORTHEAST WRF GRIT REMOVAL, MOVING BELT FILTER AND EQUALIZATION SYSTEM IMPROVEMENTS

HEADWORKS PLAN (LOWER LEVEL) - ELECTRICAL

DWG NAME: 6030-E2.4.dwg	FIELD BOOK:	SURVEYED BY:	SCALE: VERT. N/A
CONTRACT NO.: 15-0045-UT	DATE DRAWN: JULY 2019	DRAWN BY: RFB	HORIZ. AS SHOWN
JOB NO.: 2110-210-002	DESIGNED BY: RFB	CHECKED BY: PSC	SHEET NO.: ## of ##

APPROVED FOR CONSTRUCTION
CITY ENGINEER MICHAEL D. QUILLEN, P.E. # 33721 DATE

© COPYRIGHT 2010 KING ENGINEERING ASSOCIATES, INC. DRAWINGS AND CONCEPTS MAY NOT BE USED OR REPRODUCED WITHOUT WRITTEN PERMISSION CONSENT IS HEREBY GRANTED SPECIFICALLY TO GOVERNMENTAL AGENCIES TO REPRODUCE THIS DOCUMENT IN COMPLIANCE WITH F.S. CHAPTER 119.

P:\-6099\6030\elec\6030-E2.4.dwg, August 21, 2019 10:09 AM, RICHARD BARBEITO

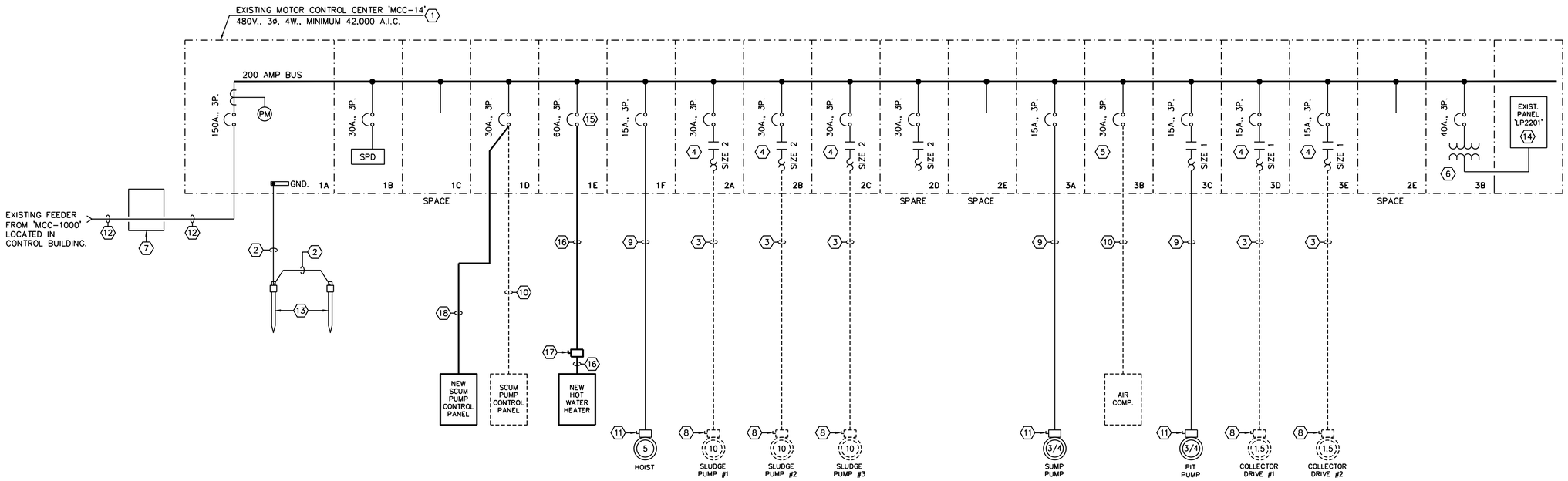

POWER ONE-LINE DIAGRAM – EXISTING 'MCC-14'

NOT TO SCALE

DRAWING NOTES:

1. EXISTING MOTOR CONTROL CENTER.
2. EXISTING NO. 6 AWG GROUNDING CONDUCTOR.
3. EXISTING 3 NO. 12 AND 1 NO. 12 E.G. – 3/4"C. TO BE REMOVED.
4. EXISTING CIRCUIT BREAKER AND MOTOR STARTER TO REMAIN. MCC BUCKET TO BE RELABELED AS "SPARE".
5. EXISTING CIRCUIT BREAKER TO REMAIN. MCC BUCKET TO BE RELABELED AS "SPARE".
6. EXISTING 30 KVA, 480–120/208V., 3ø, 4W. TRANSFORMER.
7. EXISTING MANHOLE 'MH–2A'.
8. EXISTING 30A., 3P., DISCONNECT SWITCH TO BE REMOVED.
9. EXISTING 3 NO. 12 AND 1 NO. 12 E.G. – 3/4"C.
10. EXISTING 3 NO. 10 AND 1 NO. 10 E.G. – 3/4"C. TO BE REMOVED.
11. EXISTING 30A., 3P., DISCONNECT SWITCH.
12. EXISTING 3 NO. 2/0 AND 1 NO. 4 E.G. – 2"C.
13. EXISTING GROUND RODS TO REMAIN.
14. EXISTING PANELBOARD.
15. EXISTING 15A., 3–POLE CIRCUIT BREAKER TO BE REMOVED AND REPLACED WITH NEW CIRCUIT BREAKER SHOWN. MANUFACTURER AND A.I.C. RATING TO MATCH EXISTING.
16. 3 NO. 6 AND 1 NO. 8 E.G. – 1 1/4" C.
17. NEW 60A., 3–POLE, NEMA 9 (EXPLOSION PROOF) DISCONNECT SWITCH.
18. 3 NO. 10 AND 1 NO. 10 E.G. – 3/4"C.

LOAD SUMMARY

LOAD DESCRIPTION	KVA
SLUDGE PUMPS (REMOVED)	(33.42)
COLLECTOR DRIVES (REMOVED)	(4.14)
AIR COMPRESSOR (REMOVED)	(3.82)
SCUM PUMP (REMOVED)	(11.14)
SCUM PUMP (ADDED)	11.14
NEW WATER HEATER (ADDED)	30.00
TOTAL (REMOVED)	(11.38)

LINE LEGEND

- (BOLD) NEW CONSTRUCTION
- (LIGHT) EXISTING TO REMAIN
- (DASHED) TO BE REMOVED

BID DOCUMENTS

IF THIS BAR DOES NOT MEASURE 1" THEN DRAWING HAS BEEN REDUCED SCALE ACCORDINGLY (0 – 1")

CARASTRO & ASSOCIATES, INC.
CONSULTING ENGINEERS EB–0001160
2609 W. DE LEON STREET TAMPA, FLORIDA 33609
TELEPHONE: (813) 874–9494 FAX: (813) 874–9794

King ENGINEERING ASSOCIATES, INC.
4921 Memorial Highway
One Memorial Center, Suite 300
Tampa, Florida 33634
Phone 813 880-8881
Fax 813 880-8882
www.kingengineering.com
Engineering License #2610

ELECTRICAL ENGINEER: PAUL S. CARASTRO, PE# 45830

© COPYRIGHT 2019 KING ENGINEERING ASSOCIATES, INC. DRAWINGS AND CONCEPTS MAY NOT BE USED OR REPRODUCED WITHOUT WRITTEN PERMISSION CONSENT IS HEREBY GRANTED SPECIFICALLY TO GOVERNMENTAL AGENCIES TO REPRODUCE THIS DOCUMENT IN COMPLIANCE WITH F.S. CHAPTER 119.

RECORD DRAWINGS

SURVEYED BY: | DRAWN BY:
REVIEWED BY:
PROJECT ENGINEER | DATE
APPROVED BY:
CITY ENGINEER MICHAEL D. QUILLEN, P.E. # 33721 | DATE

REVISION	BY	DATE

CITY OF CLEARWATER, FLORIDA
ENGINEERING DEPARTMENT
100 S. MYRTLE AVE.
CLEARWATER, FL 33756

INVESTIGATE BEFORE YOU EXCAVATE
CALL 811
SUNSHINE STATE ONE CALL OF FLORIDA
www.callsunshine.com
(800) 432–4770
MIN. 48 HOURS BEFORE YOU EXCAVATE

NORTHEAST WRF GRIT REMOVAL, MOVING BELT FILTER AND EQUALIZATION SYSTEM IMPROVEMENTS

POWER ONE-LINE DIAGRAM - EXISTING 'MCC-14'

DWG NAME: 6030–E3.0.DWG	FIELD BOOK:	SURVEYED BY:	SCALE: VERT. N/A
CONTRACT NO.: 15–0045–UT	DATE DRAWN: JULY 2019	DRAWN BY: RFB	HORIZ. AS SHOWN
JOB NO.: 2110–210–002	DESIGNED BY: RFB	CHECKED BY: PSC	SHEET NO.: ## of ##

APPROVED FOR CONSTRUCTION
CITY ENGINEER MICHAEL D. QUILLEN, P.E. # 33721 | DATE

P:\-6099\6030\elec\6030-E3.0.dwg, August 21, 2019 10:09 AM, RICHARD BARBEITO

E3.1

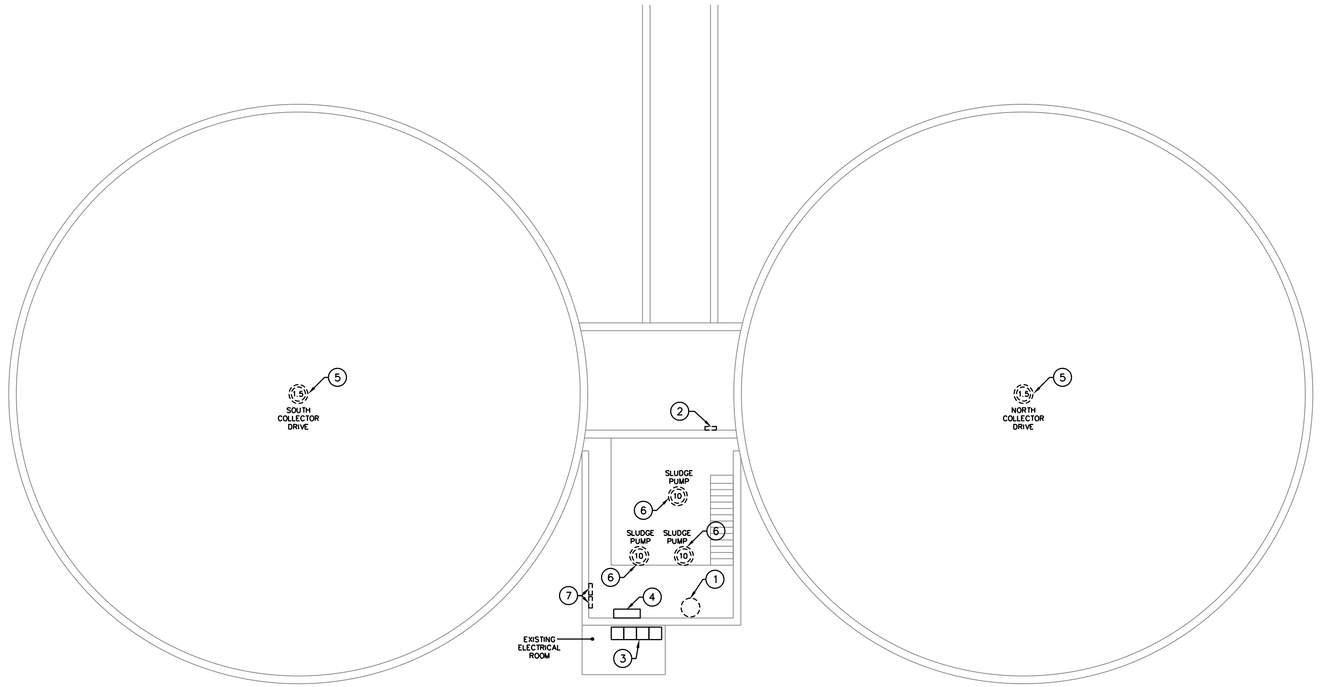

PRIMARY CLARIFIER PUMP BUILDING PLAN – ELECTRICAL DEMOLITION

GENERAL NOTES:

1. THIS DRAWING IS NOT TO SCALE. CONTRACTOR TO FIELD MEASURE ALL DISTANCES/DIMENSIONS BEFORE NEW INSTALLATION IS EXECUTED.
2. REFER TO DRAWING E0.0 FOR GENERAL DEMOLITION NOTES.

DRAWING NOTES:

1. EXISTING AIR COMPRESSOR TO BE REMOVED.
2. EXISTING CHOPPER PUMP CONTROL PANEL TO BE REMOVED.
3. EXISTING MOTOR CONTROL CENTER 'MCC-14' TO REMAIN.
4. EXISTING SCADA/PLC CABINET TO REMAIN.
5. EXISTING COLLECTOR DRIVE AND DISCONNECT SWITCH TO BE REMOVED.
6. EXISTING SLUDGE PUMP TO BE REMOVED.
7. EXISTING SAMPLE PUMP AND CONTROL PANEL TO BE REMOVED.

LINE LEGEND	
————	(LIGHT) EXISTING TO REMAIN
- - - - - - - -	(DASHED) TO BE REMOVED

BID DOCUMENTS

IF THIS BAR DOES NOT MEASURE 1" THEN DRAWING HAS BEEN REDUCED SCALE ACCORDINGLY 0 1"

CARASTRO & ASSOCIATES, INC.
CONSULTING ENGINEERS EB-0001160
2609 W. DE LEON STREET TAMPA, FLORIDA 33609
TELEPHONE: (813) 874-9494 FAX: (813) 874-9794

King
ENGINEERING ASSOCIATES, INC.
4921 Memorial Highway
One Memorial Center, Suite 300
Tampa, Florida 33634
Phone 813 880-8881
Fax 813 880-8882
www.kingengineering.com
Engineering License #2610

ELECTRICAL ENGINEER: PAUL S. CARASTRO, PE# 45830

© COPYRIGHT 2010 KING ENGINEERING ASSOCIATES, INC. DRAWINGS AND CONCEPTS MAY NOT BE USED OR REPRODUCED WITHOUT WRITTEN PERMISSION CONSENT IS HEREBY GRANTED SPECIFICALLY TO GOVERNMENTAL AGENCIES TO REPRODUCE THIS DOCUMENT IN COMPLIANCE WITH F.S. CHAPTER 119.

RECORD DRAWINGS

SURVEYED BY: DRAWN BY:

REVIEWED BY: PROJECT ENGINEER DATE

APPROVED BY: CITY ENGINEER MICHAEL D. QUILLEN, P.E. # 33721 DATE

REVISION	BY	DATE

CITY OF CLEARWATER, FLORIDA
ENGINEERING DEPARTMENT
100 S. MYRTLE AVE.
CLEARWATER, FL 33756

INVESTIGATE BEFORE YOU EXCAVATE
CALL 811
SUNSHINE STATE ONE CALL OF FLORIDA
www.callsunshine.com
(800) 432-4770
MIN. 48 HOURS BEFORE YOU EXCAVATE

NORTHEAST WRF GRIT REMOVAL, MOVING BELT FILTER AND EQUALIZATION SYSTEM IMPROVEMENTS

PRIMARY CLARIFIER PUMP BUILDING PLAN - ELECTRICAL DEMOLITION

DWG NAME: 6030-E3.1.dwg	FIELD BOOK:	SURVEYED BY:	SCALE: VERT. N/A
CONTRACT NO.: 15-0045-UT	DATE DRAWN: JULY 2019	DRAWN BY: RFB	HORIZ. AS SHOWN
JOB NO.: 2110-210-002	DESIGNED BY: RFB	CHECKED BY: PSC	SHEET NO.: ## of ##

APPROVED FOR CONSTRUCTION

CITY ENGINEER MICHAEL D. QUILLEN, P.E. # 33721 DATE

P:\-6099\6030\elec\6030-E3.1.dwg, August 21, 2019 10:11 AM, RICHARD BARBEITO

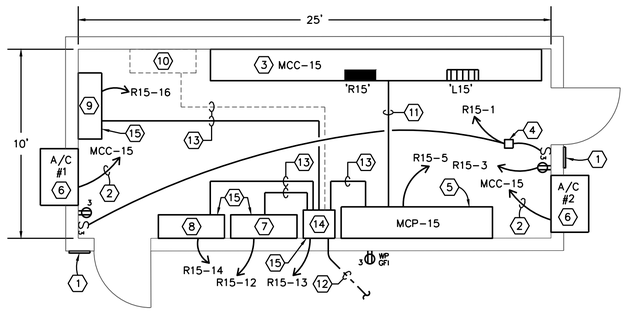

PREFABRICATED ELECTRICAL ENCLOSURE (SF-MCC)

SCALE: 1/4" = 1'-0"

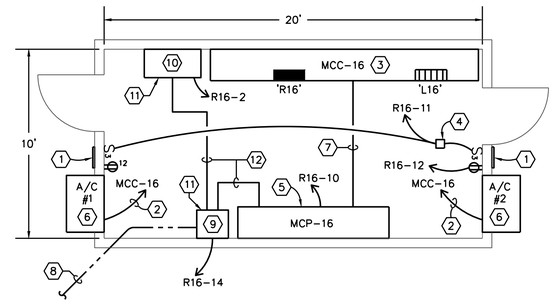

PREFABRICATED ELECTRICAL ENCLOSURE (EQ-MCC)

SCALE: 1/4" = 1'-0"

GENERAL NOTES:

1. PROVIDE AND INSTALL ALL CONDUITS WITH PULL STRING FOR FUTURE EQUIPMENT LOCATIONS. ALL FUTURE CONDUITS TO BE CAPPED, AND IDENTIFIED AS "FUTURE."
2. PROVIDE AND INSTALL SEAL-OFF FITTINGS FOR ALL CONDUITS PRIOR TO ENTERING ELECTRICAL BUILDING ENCLOSURE SF-MCC & EQ-MCC.

(SF-MCC) NOTES:

1. PROVIDE SIGNAGE TO READ "WARNING - ARC FLASH HAZARD". CONTRACTOR TO SUBMIT SIGNAGE TO OWNER/ENGINEER FOR APPROVAL.
2. SEE POWER ONE-LINE DIAGRAM ON DRAWINGS E3.3 & E3.4 FOR CONDUIT, CONDUCTOR SIZES & DISCONNECT SIZES.
3. SEE POWER ONE LINE DIAGRAM ON DRAWINGS E3.3 & E3.4.
4. PREFABRICATED ENCLOSURE LIGHTING CONNECTION.
5. NEW MASTER CONTROL PANEL FOR NEW MOVING BELT FILTER PUMPS AND GRIT SYSTEM. SEE DIVISION 13 SPECIFICATIONS.
6. PRE-INSTALLED 4 TON (48,000 BTU) AC UNIT.
7. MOVING BELT FILTER MASTER CONTROL PANEL #1.
8. MOVING BELT FILTER MASTER CONTROL PANEL #2.
9. MOVING BELT FILTER MASTER CONTROL PANEL #3.
10. MOVING BELT FILTER MASTER CONTROL PANEL #4 (FUTURE).
11. LOW VOLTAGE CONDUITS FOR CONTROL WIRING. SEE POWER ONE-LINE DIAGRAM ON DRAWING E3.3 & E3.4 FOR CONDUIT QUANTITIES AND CONDUCTOR SIZES.
12. 1" CONDUIT WITH (1) FIBER OPTIC CABLE TO EXISTING MANAGED ETHERNET SWITCH LOCATED IN EXISTING CONTROL BUILDING, 2ND FLOOR. REFER TO INSTRUMENTATION DRAWINGS I1.00 & I1.01.
13. 1" CONDUIT WITH (1) CAT 5e (ETHERNET) CABLE.
14. NEW MANAGED ETHERNET SWITCH.
15. SUPPLIED BY EQUIPMENT MANUFACTURER. INSTALLED BY ELECTRICAL CONTRACTOR. COORDINATE EXACT WALL MOUNTING REQUIREMENTS WITH ENCLOSURE MANUFACTURER.

(EQ-MCC) NOTES:

1. PROVIDE SIGNAGE TO READ "WARNING - ARC FLASH HAZARD". CONTRACTOR TO SUBMIT SIGNAGE TO OWNER/ENGINEER FOR APPROVAL.
2. SEE POWER ONE-LINE DIAGRAM ON DRAWING E4.0 FOR CONDUIT, CONDUCTOR SIZES & DISCONNECT SIZES.
3. SEE POWER ONE LINE DIAGRAM ON DRAWING E4.0.
4. PREFABRICATED ENCLOSURE LIGHTING CONNECTION.
5. NEW MASTER CONTROL PANEL FOR NEW SUPPLY/RETURN PUMPS. SEE DIVISION 13 SPECIFICATIONS.
6. PRE-INSTALLED 4 TON (48,000 BTU) AC UNIT.
7. LOW VOLTAGE CONDUITS FOR CONTROL WIRING. SEE POWER ONE-LINE DIAGRAM ON DRAWING E4.0 FOR CONDUIT QUANTITIES AND CONDUCTOR SIZES.
8. 1" CONDUIT WITH (1) FIBER OPTIC CABLE TO EXISTING MANAGED ETHERNET SWITCH LOCATED IN EXISTING CONTROL BUILDING, 2ND FLOOR. REFER TO INSTRUMENTATION DRAWINGS I1.00 & I1.01.
9. NEW MANAGED ETHERNET SWITCH.
10. ENVIROMIX MASTER CONTROL PANEL.
11. SUPPLIED BY EQUIPMENT MANUFACTURER. INSTALLED BY ELECTRICAL CONTRACTOR. COORDINATE EXACT WALL MOUNTING REQUIREMENTS WITH ENCLOSURE MANUFACTURER.
12. 1" CONDUIT WITH (1) CAT 5e (ETHERNET) CABLE.

LINE LEGEND	
———	(BOLD) NEW CONTRUCTION
———	(LIGHT) EXISTING TO REMAIN
- - - - - -	(DASHED) FUTURE

BID DOCUMENTS

IF THIS BAR DOES NOT MEASURE 1" THEN DRAWING HAS BEEN REDUCED SCALE ACCORDINGLY (0 – 1")

CARASTRO & ASSOCIATES, INC.
CONSULTING ENGINEERS EB-0001160
2609 W. DE LEON STREET TAMPA, FLORIDA 33609
TELEPHONE: (813) 874-9494 FAX: (813) 874-9794

King ENGINEERING ASSOCIATES, INC.
4921 Memorial Highway
One Memorial Center, Suite 300
Tampa, Florida 33634
Phone 813 880-8881
Fax 813 880-8882
www.kingengineering.com
Engineering License #2610

ELECTRICAL ENGINEER: PAUL S. CARASTRO, PE# 45830

RECORD DRAWINGS
SURVEYED BY: DRAWN BY:
REVIEWED BY: PROJECT ENGINEER DATE
APPROVED BY: CITY ENGINEER MICHAEL D. QUILLEN, P.E. # 33721 DATE

REVISION	BY	DATE

CITY OF CLEARWATER, FLORIDA
ENGINEERING DEPARTMENT
100 S. MYRTLE AVE.
CLEARWATER, FL 33756

INVESTIGATE BEFORE YOU EXCAVATE
CALL 811
SUNSHINE STATE ONE CALL OF FLORIDA
www.callsunshine.com
(800) 432-4770
MIN. 48 HOURS BEFORE YOU EXCAVATE

NORTHEAST WRF GRIT REMOVAL, MOVING BELT FILTER AND EQUALIZATION SYSTEM IMPROVEMENTS

ENLARGED ELECTRICAL ENCLOSURES (SF-MCC & EQ-MCC)

DWG NAME: 6030-E3.2.dwg	FIELD BOOK:	SURVEYED BY:	SCALE: VERT. N/A
CONTRACT NO.: 15-0045-UT	DATE DRAWN: JULY 2019	DRAWN BY: RFB	HORIZ. AS SHOWN
JOB NO.: 2110-210-002	DESIGNED BY: RFB	CHECKED BY: PSC	SHEET NO.: ## of ##

APPROVED FOR CONSTRUCTION
CITY ENGINEER MICHAEL D. QUILLEN, P.E. # 33721 DATE

© COPYRIGHT 2019 KING ENGINEERING ASSOCIATES, INC. DRAWINGS AND CONCEPTS MAY NOT BE USED OR REPRODUCED WITHOUT WRITTEN PERMISSION CONSENT IS HEREBY GRANTED SPECIFICALLY TO GOVERNMENTAL AGENCIES TO REPRODUCE THIS DOCUMENT IN COMPLIANCE WITH F.S. CHAPTER 119.

P:\-6099\6030\elec\6030-E3.2.dwg, August 21, 2019 10:13 AM, RICHARD BARBEITO

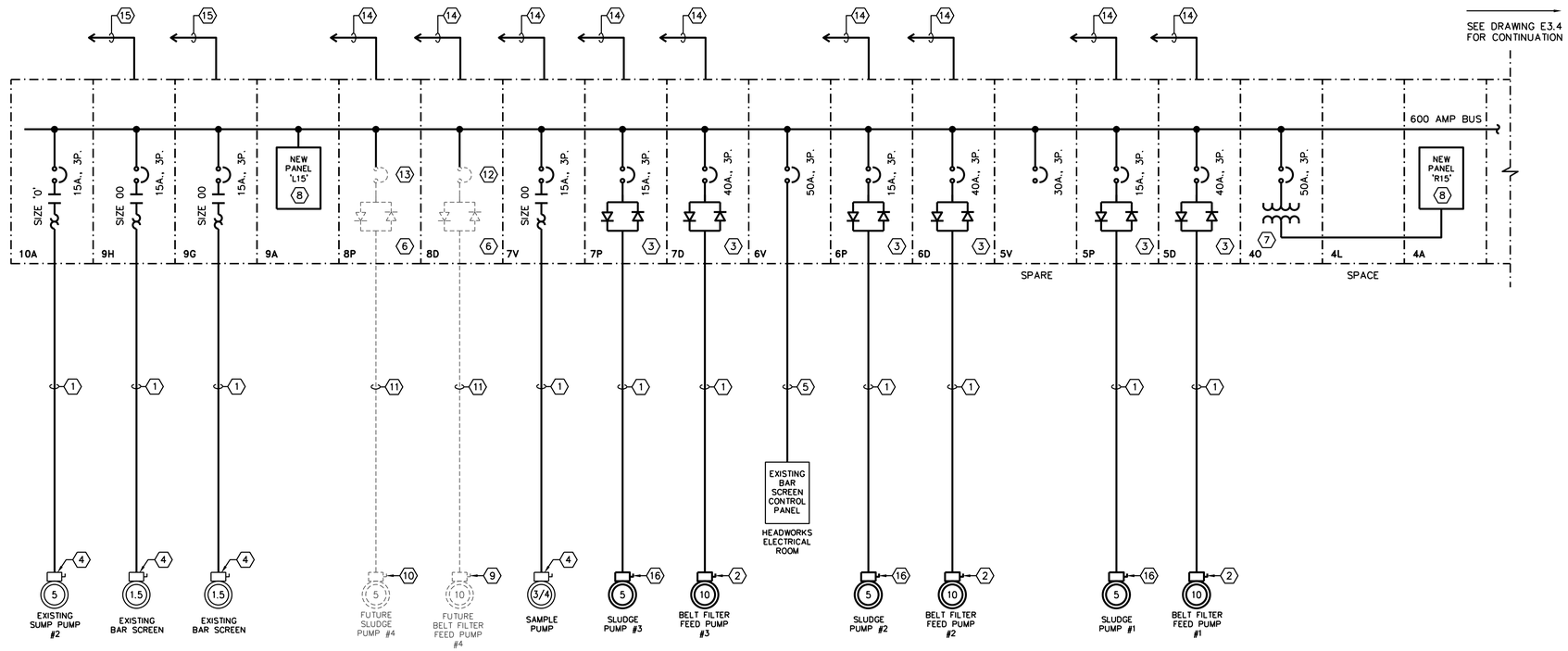

POWER ONE-LNE DIAGRAM – NEW 'MCC-15'

NOT TO SCALE

GENERAL NOTES:

1. ALL ELECTRICAL EQUIPMENT, DISCONNECT SWITCHES, CONDUIT, JUNCTION BOXES & FITTINGS WITHIN FEED PUMP BUILDING AND SALSNES FILTER AREA TO BE NEMA 9 (EXPLOSION PROOF) RATED.
2. PROVIDE AND INSTALL ALL CONDUITS WITH PULL STRING FOR FUTURE EQUIPMENT LOCATIONS. ALL FUTURE CONDUITS TO BE CAPPED, AND IDENTIFIED AS "FUTURE."
3. PROVIDE AND INSTALL SEAL-OFF FITTINGS FOR ALL CONDUITS PRIOR TO ENTERING ELECTRICAL BUILDING ENCLOSURE SF-MCC.

NOTES:

1. 3 NO. 12 AND 1 NO. 12 E.G. – 3/4"C.
2. 60A., 3P., NEMA 9 (EXPLOSION PROOF) DISCONNECT SWITCH.
3. VFD DRIVE (SIZED FOR MOTOR HORSEPOWER SHOWN).
4. EXISTING 30A., 3P., DISCONNECT SWITCH TO REMAIN.
5. 3 NO. 8 AND 1 NO. 10 E.G. – 1"C.
6. FUTURE – VFD DRIVE.
7. 30 KVA, 480-120/208V., 3PH., 4W. TRANSFORMER.
8. NEW PANELBOARD. SEE PANEL SCHEDULE ON DRAWING E5.0.
9. FUTURE – 60A., 3P., NEMA 9 (EXPLOSION PROOF) DISCONNECT SWITCH.
10. FUTURE – 30A., 3P., NEMA 9 (EXPLOSION PROOF) DISCONNECT SWITCH.
11. FUTURE – 3 NO. 12 AND 1 NO. 12 E.G. – 3/4"C.
12. FUTURE – 40A, 3-POLE CIRCUIT BREAKER.
13. FUTURE – 15A, 3-POLE CIRCUIT BREAKER.
14. 1" C. WITH CAT 5E (ETHERNET IP) CABLE TO NEW MANAGED ETHERNET SWITCH, LOCATED IN MCP-15.
15. 10 NO. 14 – 3/4"C. TO NEW MCP-15.
16. 30A., 3P., NEMA 9 (EXPLOSION PROOF) DISCONNECT SWITCH.
17. FUTURE – 30A., 3P., NEMA 9 (EXPLOSION PROOF) DISCONNECT SWITCH.

LINE LEGEND

————	NEW CONTRUCTION
————	EXISTING TO REMAIN
- - - - - - - -	FUTURE

BID DOCUMENTS

IF THIS BAR DOES NOT MEASURE 1" THEN DRAWING HAS BEEN REDUCED SCALE ACCORDINGLY (0 – 1")

CARASTRO & ASSOCIATES, INC.
CONSULTING ENGINEERS EB-0001160
2609 W. DE LEON STREET TAMPA, FLORIDA 33609
TELEPHONE: (813) 874-9494 FAX: (813) 874-9794

King
ENGINEERING ASSOCIATES, INC.
4921 Memorial Highway
One Memorial Center, Suite 300
Tampa, Florida 33634
Phone 813 880-8881
Fax 813 880-8882
www.kingengineering.com
Engineering License #2610

ELECTRICAL ENGINEER: PAUL S. CARASTRO, PE# 45830

© COPYRIGHT 2010 KING ENGINEERING ASSOCIATES, INC. DRAWINGS AND CONCEPTS MAY NOT BE USED OR REPRODUCED WITHOUT WRITTEN PERMISSION CONSENT IS HEREBY GRANTED SPECIFICALLY TO GOVERNMENTAL AGENCIES TO REPRODUCE THIS DOCUMENT IN COMPLIANCE WITH F.S. CHAPTER 119.

RECORD DRAWINGS

SURVEYED BY: DRAWN BY:
REVIEWED BY: PROJECT ENGINEER DATE
APPROVED BY: CITY ENGINEER MICHAEL D. QUILLEN, P.E. # 33721 DATE

REVISION	BY	DATE

CITY OF CLEARWATER, FLORIDA
ENGINEERING DEPARTMENT
100 S. MYRTLE AVE.
CLEARWATER, FL 33756

INVESTIGATE BEFORE YOU EXCAVATE
CALL 811
SUNSHINE STATE ONE CALL OF FLORIDA
www.callsunshine.com
(800) 432-4770
MIN. 48 HOURS BEFORE YOU EXCAVATE

NORTHEAST WRF GRIT REMOVAL, MOVING BELT FILTER AND EQUALIZATION SYSTEM IMPROVEMENTS

POWER ONE-LNE DIAGRAM - NEW 'MCC-15'

DWG NAME: 6030-E3.3.dwg	FIELD BOOK:	SURVEYED BY:	SCALE: VERT. N/A
CONTRACT NO.: 15-0045-UT	DATE DRAWN: JULY 2019	DRAWN BY: RFB	HORIZ. AS SHOWN
JOB NO.: 2110-210-002	DESIGNED BY: RFB	CHECKED BY: PSC	SHEET NO.: ## of ##

APPROVED FOR CONSTRUCTION
CITY ENGINEER MICHAEL D. QUILLEN, P.E. # 33721 DATE

P:\-6099\6030\elec\6030-E3.3.dwg, August 21, 2019 10:14 AM, RICHARD BARBEITO

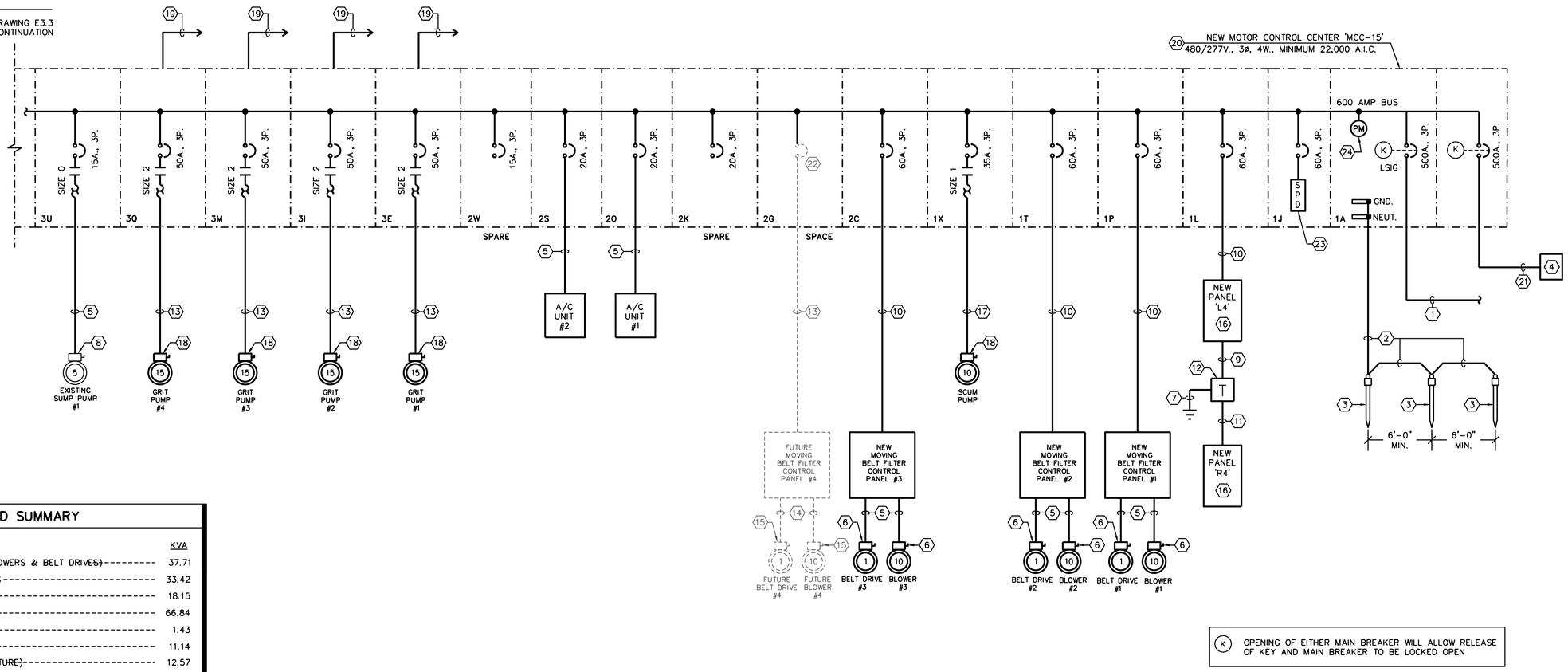

(K) OPENING OF EITHER MAIN BREAKER WILL ALLOW RELEASE OF KEY AND MAIN BREAKER TO BE LOCKED OPEN

LOAD SUMMARY

LOAD DESCRIPTION	KVA
MOVING BELT FILTER (BLOWERS & BELT DRIVES)	37.71
BELT FILTER FEED PUMPS	33.42
SLUDGE PUMPS	18.15
GRIT PUMPS	66.84
GRIT CLASSIFIER #2	1.43
SCUM PUMP	11.14
MOVING BELT FILTER (FUTURE)	12.57
BELT FILTER FEED PUMP (FUTURE)	11.14
SLUDGE PUMP (FUTURE)	6.05
NEW PANEL 'L4'	24.93
LIGHTING	1.40
RECEPTACLES	1.08
AIR CONDITIONING	6.40
MISCELLANEOUS	7.00
SUMP PUMPS (EXISTING)	7.64
GRIT REMOVAL CONTROL PANEL (EXISTING)	8.30
OLD BAR SCREEN (EXISTING)	2.07
YAM PACKER CONTROL PANEL (EXISTING)	4.98
BAR SCREEN CONTROL PANEL (EXISTING)	16.60
ODOR CONTROL (EXISTING)	4.98
SAMPLE PUMP (EXISTING)	1.11
TOTAL	284.94

284.94 KVA @ 480V, 3ø = 342.89 AMPS.

POWER ONE-LINE DIAGRAM – NEW 'MCC-15' (CONTINUED)

NOT TO SCALE

GENERAL NOTES:

1. ALL ELECTRICAL EQUIPMENT, DISCONNECT SWITCHES, CONDUIT, JUNCTION BOXES & FITTINGS WITHIN FEED PUMP BUILDING AND SALSNES FILTER AREA TO BE NEMA 9 (EXPLOSION PROOF) RATED.
2. PROVIDE AND INSTALL ALL CONDUITS WITH PULL STRING FOR FUTURE EQUIPMENT LOCATIONS. ALL FUTURE CONDUITS TO BE CAPPED, AND IDENTIFIED AS "FUTURE."
3. PROVIDE AND INSTALL SEAL-OFF FITTINGS FOR ALL CONDUITS PRIOR TO ENTERING ELECTRICAL BUILDING ENCLOSURE SF-MCC.

DRAWING NOTES:

(1) 2 SETS OF 3 – 250 MCM (PHASE) AND 1 NO. 1/0 (NEUTRAL) – 2 1/2"C TO NEW (LOOP FEED) 300 KVA UTILITY TRANSFORMER. SEE DRAWING E4.0 FOR CONTINUATION.
(2) NO. 1/0 GROUNDING CONDUCTOR.
(3) 5/8" X 20'-0" COPPERWELD GROUND ROD.
(4) NEW PORTABLE GENERATOR DOCKING STATION. TRYSTAR NO. GDS-065W-LM-I.
(5) 3 NO. 12 AND 1 NO. 12 E.G. – 3/4"C.
(6) 30A., 3P., NEMA 9 (EXPLOSION PROOF) DISCONNECT SWITCH.
(7) NO. 8 AWG GROUNDING CONDUCTOR TO NEW 5/8" X 20'-0" COPPERWELD GROUND ROD.
(8) EXISTING 30A., 3P., NEMA 4X (316 STAINLESS STEEL) DISCONNECT SWITCH TO REMAIN.
(9) 2 NO. 8 AND 1 NO. 8 G.C. – 3/4"C.
(10) 4 NO. 6 AND 1 NO. 8 E.G. – 1"C.
(11) 3 NO. 6 AND 1 NO. 8 E.G. – 1 1/4"C.
(12) 10 KVA 480-120/240V., 1PH., 3W. TRANSFORMER.
(13) 3 NO. 10 AND 1 NO. 10 E.G. – 3/4"C.
(14) FUTURE – 3 NO. 12 AND 1 NO. 12 E.G. – 3/4"C.
(15) FUTURE – 30A., 3P., NEMA 9X (EXPLOSION PROOF) DISCONNECT SWITCH.
(16) NEW PANELBOARD. SEE PANEL SCHEDULE ON DRAWING E5.1.
(17) 3 NO. 12 AND 1 NO. 12 E.G. – 3/4"C.
(18) 60A., 3P., NEMA 4X (316 STAINLESS STEEL) DISCONNECT SWITCH.
(19) 3 NO. 14 – 3/4"C. TO NEW MCP-15
(20) NEW MCC LOCATED IN NEW ELECTRICAL ENCLOSURE (SF-MCC).
(21) 2 SETS OF 3-250 MCM (PHASE), 1 NO. 1/0 (NEUTRAL) AND 1 NO. 1/0 E.G. – 2 1/2" C.
(22) FUTURE – 60A, 3-POLE CIRCUIT BREAKER.
(23) SURGE PROTECTION DEVICE (INCLUDED IN MCC).
(24) POWER MONITOR (INCLUDED IN MCC).

LINE LEGEND

- NEW CONTRUCTION
- EXISTING TO REMAIN
- FUTURE

BID DOCUMENTS

IF THIS BAR DOES NOT MEASURE 1" THEN DRAWING HAS BEEN REDUCED SCALE ACCORDINGLY (0 – 1")

CARASTRO & ASSOCIATES, INC.
CONSULTING ENGINEERS EB-0001160
2609 W. DE LEON STREET TAMPA, FLORIDA 33609
TELEPHONE: (813) 874-9494 FAX: (813) 874-9794

King
ENGINEERING ASSOCIATES, INC.
4921 Memorial Highway
One Memorial Center, Suite 300
Tampa, Florida 33634
Phone 813 880-8881
Fax 813 880-8882
www.kingengineering.com
Engineering License #2610

ELECTRICAL ENGINEER: PAUL S. CARASTRO, PE# 45830

© COPYRIGHT 2019 KING ENGINEERING ASSOCIATES, INC. DRAWINGS AND CONCEPTS MAY NOT BE USED OR REPRODUCED WITHOUT WRITTEN PERMISSION CONSENT IS HEREBY GRANTED SPECIFICALLY TO GOVERNMENTAL AGENCIES TO REPRODUCE THIS DOCUMENT IN COMPLIANCE WITH F.S. CHAPTER 119.

RECORD DRAWINGS
SURVEYED BY: DRAWN BY:
REVIEWED BY: PROJECT ENGINEER DATE
APPROVED BY: CITY ENGINEER MICHAEL D. QUILLEN, P.E. # 33721 DATE

REVISION	BY	DATE

CITY OF CLEARWATER, FLORIDA
ENGINEERING DEPARTMENT
100 S. MYRTLE AVE.
CLEARWATER, FL 33756

INVESTIGATE BEFORE YOU EXCAVATE
CALL 811
SUNSHINE STATE ONE CALL OF FLORIDA
www.callsunshine.com
(800) 432-4770
MIN. 48 HOURS BEFORE YOU EXCAVATE

NORTHEAST WRF GRIT REMOVAL, MOVING BELT FILTER AND EQUALIZATION SYSTEM IMPROVEMENTS

POWER ONE-LINE DIAGRAM - NEW 'MCC-15' (CONTINUED)

DWG NAME: 6030-E3.4.dwg	FIELD BOOK:	SURVEYED BY:	SCALE: VERT. N/A
CONTRACT NO.: 15-0045-UT	DATE DRAWN: JULY 2019	DRAWN BY: RFB	HORIZ. AS SHOWN
JOB NO.: 2110-210-002	DESIGNED BY: RFB	CHECKED BY: PSC	SHEET NO.: ## of ##

APPROVED FOR CONSTRUCTION
CITY ENGINEER MICHAEL D. QUILLEN, P.E. # 33721 DATE

P:\-6099\6030\elec\6030-E3.4.dwg, August 21, 2019 10:15 AM, RICHARD BARBEITO

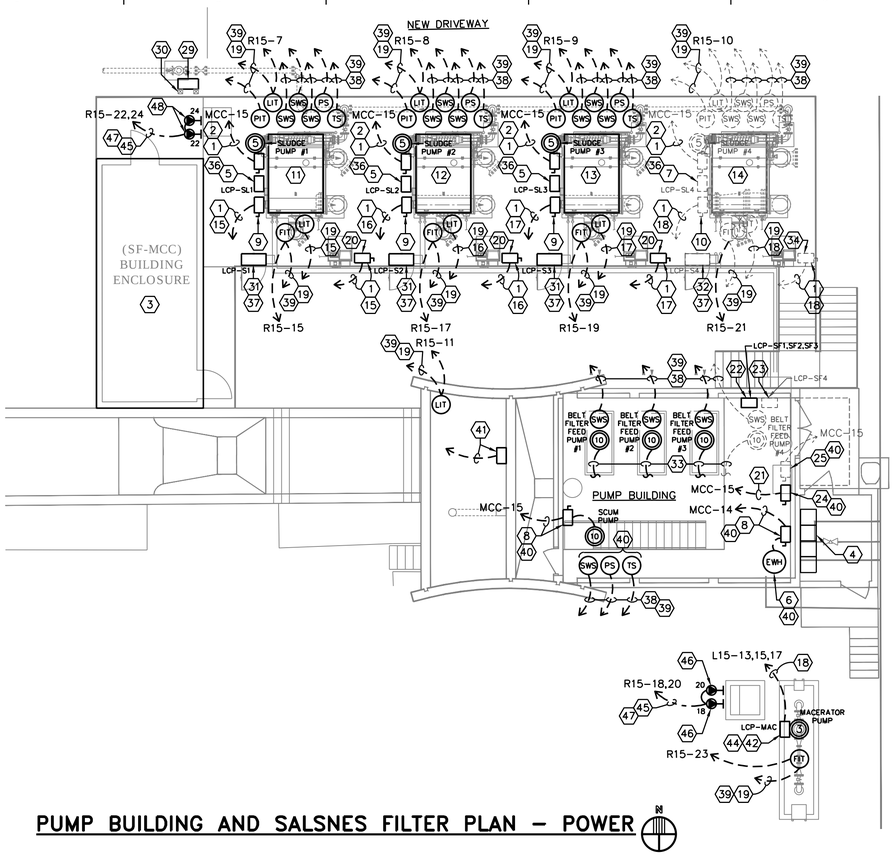

PUMP BUILDING AND SALSNES FILTER PLAN – POWER

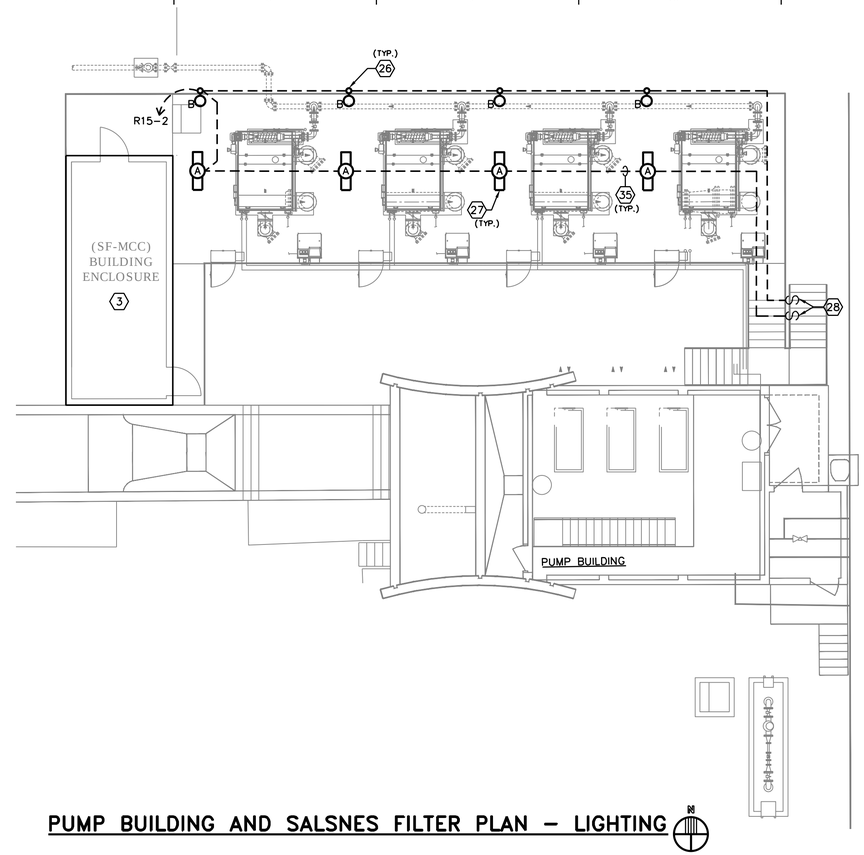

PUMP BUILDING AND SALSNES FILTER PLAN – LIGHTING

GENERAL NOTES:

1. ALL ELECTRICAL EQUIPMENT, DISCONNECT SWITCHES, CONDUIT, JUNCTION BOXES & FITTINGS WITHIN FEED PUMP BUILDING AND MOVING BELT FILTER AREA TO BE NEMA 9 (EXPLOSION PROOF) RATED.
2. PROVIDE AND INSTALL ALL CONDUITS WITH PULL STRING FOR FUTURE EQUIPMENT LOCATIONS. ALL FUTURE CONDUITS TO BE CAPPED, AND IDENTIFIED AS "FUTURE."
3. PROVIDE AND INSTALL SEAL-OFF FITTINGS FOR ALL CONDUITS PRIOR TO ENTERING ELECTRICAL BUILDING ENCLOSURE SF-MCC.
4. THIS DRAWING IS NOT TO SCALE. CONTRACTOR TO FIELD MEASURE ALL DISTANCES/DIMENSIONS BEFORE NEW INSTALLATION IS EXECUTED.

DRAWING NOTES:

1. SEE POWER ONE-LINE DIAGRAM ON DRAWINGS E3.3 & E3.4 FOR CONDUIT, CONDUCTORS AND DISCONNECT SIZES.
2. TO MCC-15, LOCATED IN ELECTRICAL BUILDING ENCLOSURE SF-MCC.
3. SEE ENLARGED ELECTRICAL BUILDING ENCLOSURE LAYOUT ON DRAWING E3.2.
4. EXISTING MOTOR CONTROL CENTER MCC-14 TO REMAIN.
5. SLUDGE PUMP LOCAL CONTROL PANEL. SEE LOCAL CONTROL PANEL SCHEDULE ON DRAWING E6.1.
6. NEW HOT WATER HEATER LOCATED AT LOWER LEVEL.
7. FUTURE SLUDGE PUMP LOCAL CONTROL PANEL. SEE LOCAL CONTROL PANEL SCHEDULE ON DRAWING E6.1.
8. SEE POWER ONE-LINE DIAGRAM ON DRAWING E3.0 FOR CONDUIT, CONDUCTORS & DISCONNECT SWITCH SIZES.
9. DISCONNECT SWITCH FOR BELT DRIVE, LOCATED ON UPPER LEVEL.
10. FUTURE DISCONNECT SWITCH FOR BELT DRIVE, LOCATED ON UPPER LEVEL.
11. NEW MOVING BELT FILTER #1
12. NEW MOVING BELT FILTER #2
13. NEW MOVING BELT FILTER #3.
14. FUTURE MOVING BELT FILTER #4
15. TO MOVING BELT FILTER PANEL #1, LOCATED IN ELECTRICAL BUILDING ENCLOSURE SF-MCC.
16. TO MOVING BELT FILTER PANEL #2, LOCATED IN ELECTRICAL BUILDING ENCLOSURE SF-MCC.
17. TO MOVING BELT FILTER PANEL #3, LOCATED IN ELECTRICAL BUILDING ENCLOSURE SF-MCC.
18. TO FUTURE MOVING BELT FILTER PANEL #4, LOCATED IN ELECTRICAL BUILDING ENCLOSURE SF-MCC.
19. 2 NO. 16 TSP (4-20Ma) – 3/4"C.
20. DISCONNECT SWITCH FOR BLOWER, LOCATED ON LOWER LEVEL. SEE POWER ONE-LINE DIAGRAM ON DRAWING E3.4.
21. MCC-15 LOCATED IN ELECTRICAL BUILDING ENCLOSURE SF-MCC. SEE POWER ONE-LINE DIAGRAM ON DRAWINGS E3.3 & E3.4 FOR CONDUIT, CONDUCTORS AND DISCONNECT SIZES.
22. BELT FILTER FEED PUMP LOCAL CONTROL PANEL (TOTAL OF 3). MOUNT LOCAL CONTROL PANELS ABOVE AND BELOW AS NEEDED. SEE LOCAL CONTROL PANEL SCHEDULE ON DRAWING E6.1.
23. FUTURE BELT FILTER FEED PUMP LOCAL CONTROL PANEL. SEE LOCAL CONTROL PANEL SCHEDULE ON DRAWING E6.1.
24. BELT FILTER FEED PUMP DISCONNECT SWITCHES (TOTAL OF 3). MOUNT DISCONNECT SWITCHES ABOVE AND BELOW AS NEEDED.
25. FUTURE BELT FILTER FEED PUMP DISCONNECT SWITCH.
26. SEE HANDRAIL LIGHTING FIXTURE DETAIL ON DRAWING E7.0.
27. NEW 1X4 LIGHT FIXTURE TO BE SURFACE MOUNTED BELOW PLATFORM. COORDINATE EXACT LIGHTING LOCATIONS WITH PLATFORM INSTALLER.
28. NEW NEMA 9 (EXPLOSION PROOF) LIGHT SWITCHES. COORDINATE EXACT LOCATIONS WITH OWNER.
29. NEW PORTABLE GENERATOR DOCKING STATION LOCATION. SEE POWER ONE-LINE DIAGRAM ON DRAWING E3.3.
30. MOUNT NEW PORTABLE GENERATOR DOCKING STATION TO (2) 6" X 6" X 10' CONCRETE POST.
31. MOVING BELT FILTER LOCAL CONTROL PANEL SUPPLIED BY MOVING BELT FILTER MANUFACTURER. LOCAL CONTROL PANEL TO BE LOCATED ON UPPER LEVEL. PROVIDE AND INSTALL (STAINLESS STEEL) UNI-STRUT SUPPORT SYSTEM. SEE LOCAL CONTROL PANEL SCHEDULE ON DRAWING E6.1.
32. FUTURE MOVING BELT FILTER LOCAL CONTROL PANEL SUPPLIED BY MOVING BELT FILTER MANUFACTURER. SEE LOCAL CONTROL PANEL SCHEDULE ON DRAWING E6.1.
33. TO RESPECTIVE DISCONNECT SWITCHES LOCATED ON EAST WALL.
34. FUTURE DISCONNECT SWITCH FOR BLOWER, LOCATED ON LOWER LEVEL. SEE POWER ONE-LINE DIAGRAM ON DRAWING E3.3.
35. LIGHTING CONDUIT TO BE SURFACE MOUNTED BELOW PLATFORM DECK. COORDINATE EXACT CONDUIT ROUTING WITH PLATFORM INSTALLER.
36. SEE LOCAL CONTROL PANEL DETAIL #2 AND LOCAL CONTROL PANEL ELEVATION #2 ON DRAWING E7.0.
37. SEE MOVING BELT FILTER LOCAL CONTROL PANEL ELEVATION ON DRAWING E7.0.
38. 4 NO. 14 – 3/4"C.
39. TO NEW MASTER CONTROL PANEL MCP-15, LOCATED IN ELECTRICAL BUILDING ENCLOSURE SF-MCC.
40. LOCATED AT LOWER LEVEL.
41. NEW SCUM PUMP CONTROL PANEL. 4 NO. 16 – 3/4"C. TO NEW MCC-15 (ASSOCIATED MOTOR STARTER), LOCATED IN ELECTRICAL BUILDING ENCLOSURE SF-MCC.
42. SEE LOCAL CONTROL PANEL DETAIL #3 AND LOCAL CONTROL PANEL ELEVATION #2 ON DRAWING E7.0.
43. 3 NO. 12 AND 1 NO. 12 E.G. –3/4"C. TO MCP-MAC, LOCATED IN ELECTRICAL BUILDING ENCLOSURE SF-MCC.
44. MACERATOR PUMP LOCAL CONTROL PANEL. SEE LOCAL CONTROL PANEL SCHEDULE ON DRAWING E6.1.
45. TO ELECTRICAL BUILDING ENCLOSURE EQ-MCC.
46. EXPLOSION PROOF (125VAC.) RECEPTACLE FOR NEW SUMP PUMP. EATON CROUSE-HINDS NO. CFSC175-2023-M15.
47. 4 NO. 12 AND 1 NO. 12 E.G. – 3/4"C.
48. EXPLOSION PROOF (125VAC.) RECEPTACLE FOR NEW SUMP PUMP, LOCATED ON LOWER LEVEL. EATON CROUSE-HINDS NO. CFSC175-2023-M15.

LINE LEGEND

———	(BOLD) NEW CONTRUCTION
———	(LIGHT) EXISTING TO REMAIN
- - - - - -	(DASHED) FUTURE

BID DOCUMENTS

IF THIS BAR DOES NOT MEASURE 1" THEN DRAWING HAS BEEN REDUCED SCALE ACCORDINGLY (0 – 1")

CARASTRO & ASSOCIATES, INC.
CONSULTING ENGINEERS EB-0001160
2609 W. DE LEON STREET TAMPA, FLORIDA 33609
TELEPHONE: (813) 874-9494 FAX: (813) 874-9794

King ENGINEERING ASSOCIATES, INC.
4921 Memorial Highway
One Memorial Center, Suite 300
Tampa, Florida 33634
Phone 813 880-8881
Fax 813 880-8882
www.kingengineering.com
Engineering License #2610

ELECTRICAL ENGINEER: PAUL S. CARASTRO, PE# 45830

RECORD DRAWINGS

SURVEYED BY: DRAWN BY:
REVIEWED BY: PROJECT ENGINEER DATE
APPROVED BY: CITY ENGINEER MICHAEL D. QUILLEN, P.E. # 33721 DATE

REVISION	BY	DATE

CITY OF CLEARWATER, FLORIDA
ENGINEERING DEPARTMENT
100 S. MYRTLE AVE.
CLEARWATER, FL 33756

INVESTIGATE BEFORE YOU EXCAVATE
CALL 811
SUNSHINE STATE ONE CALL OF FLORIDA
www.callsunshine.com
(800) 432-4770
MIN. 48 HOURS BEFORE YOU EXCAVATE

NORTHEAST WRF GRIT REMOVAL, MOVING BELT FILTER AND EQUALIZATION SYSTEM IMPROVEMENTS
PUMP BUILDING AND SALSNES FILTER PLAN - POWER & LIGHTING

DWG NAME: 6030-E3.5.dwg	FIELD BOOK:	SURVEYED BY:	SCALE: VERT. N/A
CONTRACT NO.: 15-0045-UT	DATE DRAWN: JULY 2019	DRAWN BY: RFB	HORIZ. AS SHOWN
JOB NO.: 2110-210-002	DESIGNED BY: RFB	CHECKED BY: PSC	SHEET NO.: ## of ##

APPROVED FOR CONSTRUCTION
CITY ENGINEER MICHAEL D. QUILLEN, P.E. # 33721 DATE

© COPYRIGHT 2010 KING ENGINEERING ASSOCIATES, INC. DRAWINGS AND CONCEPTS MAY NOT BE USED OR REPRODUCED WITHOUT WRITTEN PERMISSION CONSENT IS HEREBY GRANTED SPECIFICALLY TO GOVERNMENTAL AGENCIES TO REPRODUCE THIS DOCUMENT IN COMPLIANCE WITH F.S. CHAPTER 119.

P:\-6099\6030\elec\6030-E3.5.dwg, August 21, 2019 10:15 AM, RICHARD BARBEITO

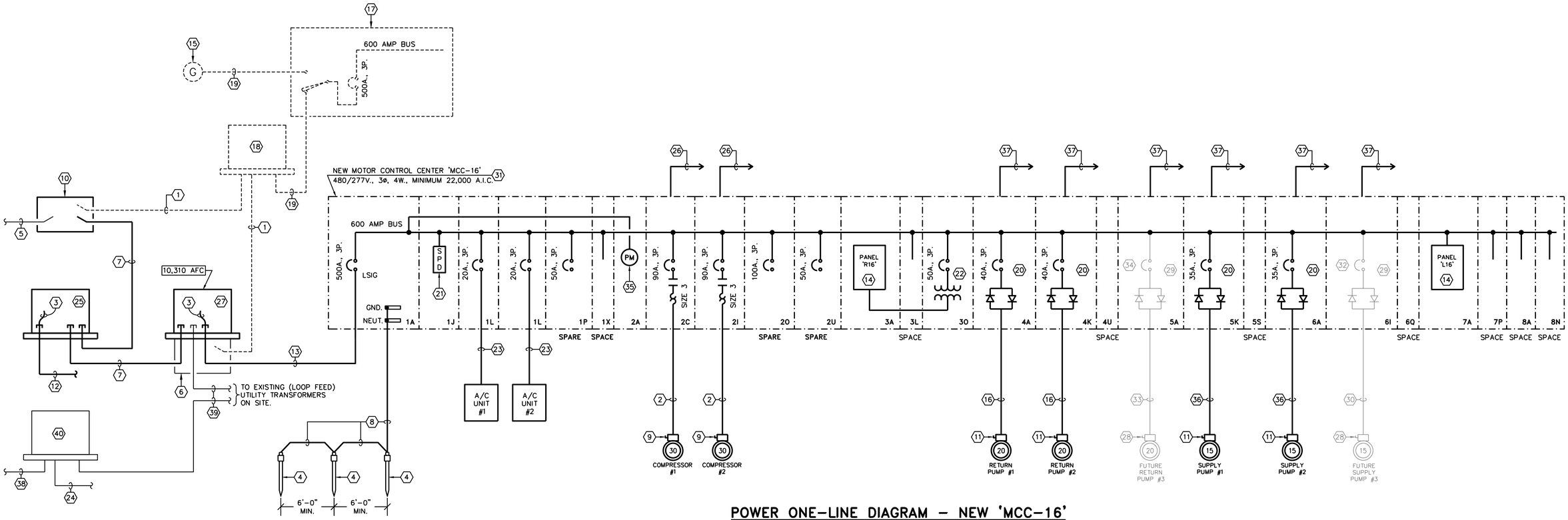

POWER ONE-LINE DIAGRAM – NEW 'MCC-16'

NOT TO SCALE

GENERAL NOTES:

1. CONTRACTOR SHALL BE RESPONSIBLE FOR COORDINATING ALL UTILITY (POWER) REQUIREMENTS WITH DUKE ENERGY.
2. DUKE ENERGY TO INSTALL ALL UTILITY CONDUITS AND CONDUCTORS.
3. FACILITY IS PRIMARY METERED.
4. PROVIDE AND INSTALL ALL CONDUITS WITH PULL STRING FOR FUTURE EQUIPMENT LOCATIONS. ALL FUTURE CONDUITS TO BE CAPPED, AND IDENTIFIED AS "FUTURE."
5. PROVIDE AND INSTALL SEAL-OFF FITTINGS FOR ALL CONDUITS PRIOR TO ENTERING ELECTRICAL BUILDING ENCLOSURE SF-MCC.

NOTES:

1. EXISTING (LOOP FEED) UTILITY PRIMARY CONDUIT TO BE REMOVED.
2. 3 NO. 6 AND 1 NO. 8 E.G. – 1"C.
3. LEAVE 6'-0" SLACK CONDUCTOR TO CONNECTION TO POWER COMPANY TRANSFORMER.
4. 5/8" x 20'-0" COPPERCLAD GROUND ROD.
5. EXISTING UTILITY PRIMARY 'A' CONDUCTORS TO REMAIN.
6. EXISTING DUKE ENERGY UNDERGROUND PULL BOX TO REMAIN.
7. NEW (LOOP FEED) UTILITY CONDUIT AND CONDUCTORS.
8. NO. 1/0 GROUND CONDUCTOR.
9. 100A, 3P NEMA 4X (316 STAINLESS STEEL) DISCONNECT SWITCH.
10. DUKE ENERGY TO PROVIDE AND INSTALL NEW UNDERGROUND (PRIMARY) MANHOLE.
11. 60A, 3P, NEMA 4X (316 STAINLESS STEEL) DISCONNECT SWITCH.
12. 2 SETS OF 3-250 (PHASE) AND 1 NO. 1/0 (NEUTRAL) – 2 1/2"C. TO NEW MCC-15. SEE DRAWING E3.4 FOR CONTINUATION.
13. 2 SETS OF 3-250MCM (PHASE) & 1 NO. 1/0 (NEUTRAL) – 2 1/2"C.
14. NEW PANELBOARD. SEE PANEL SCHEDULE ON DRAWING E5.0.
15. EXISTING 170KW STANDBY GENERATOR TO BE REMOVED. RETURN TO THE CITY OF CLEARWATER.
16. 3 NO. 8 AND 1 NO. 10 E.G. – 1"C.
17. EXISTING 480/277V., 3ø, 4W. MOTOR CONTROL CENTER TO BE REMOVED.
18. EXISTING (LOOP FEED) 300 KVA UTILITY TRANSFORMER 480/277V, 3ø, 4W TO BE REMOVED.
19. EXISTING 500A. FEEDERS AND CONDUIT TO BE REMOVED.
20. VFD DRIVE (SIZED FOR MOTOR HORSEPOWER SHOWN).
21. SURGE PROTECTION DEVICE (INCLUDED WITH MCC).
22. 30 KVA, 480-120/208V., 3PH., 4W. TRANSFORMER.
23. 3 NO. 12 AND 1 NO. 12 E.G. – 3/4"C.
24. EXISTING SERVICE ENTRANCE CONDUIT(S) AND CONDUCTORS TO EXISTING MCC IN CONTROL BUILDING.
25. NEW (LOOP FEED) 300 KVA UTILITY TRANSFORMER FOR NEW ELECTRICAL ENCLOSURE (SF-MCC). 480/277V, 3ø, 4W. SECONDARY.
26. 10 NO. 14 – 3/4"C. TO NEW MCP-16.
27. NEW (LOOP FEED) 300 KVA UTILITY TRANSFORMER FOR NEW ELECTRICAL ENCLOSURE (EQ-MCC).
28. FUTURE – 60A, 3P, NEMA 4X (316 STAINLESS STEEL) DISCONNECT SWITCH.
29. FUTURE – VFD DRIVE.
30. FUTURE – 3 NO. 10 & 1 NO. 10 E.G. – 3/4"C.
31. NEW MCC LOCATED IN NEW ELECTRICAL ENCLOSURE (FET-MCC).
32. FUTURE – 35A, 3-POLE CIRCUIT BREAKER.
33. FUTURE – 3 NO. 8 AND 1 NO. 10 E.G. – 1"C.
34. FUTURE – 40A, 3-POLE CIRCUIT BREAKER.
35. POWER MONITOR (INCLUDED WITH MCC).
36. 3 NO. 10 AND 1 NO. 10 E.G. – 3/4"C.
37. 1"C WITH CAT 5E (ETHERNET IP) CABLE TO NEW MANAGED ETHERNET SWITCH, LOCATED IN NEW MCP-16.
38. EXISTING UTILITY PRIMARY 'B' CONDUCTORS TO REMAIN.
39. EXISTING (LOOP FEED) UTILITY CONDUCTORS TO REMAIN.
40. EXISTING 750 KVA (LOOP FEED) UTILITY TRANSFORMER FOR EXISTING CONTROL BUILDING. 480/277V, 3ø, 4W SECONDARY TO REMAIN.

LOAD SUMMARY

LOAD DESCRIPTION	KVA
COMPRESSORS	63.66
SUPPLY PUMPS	33.42
RETURN PUMPS	42.98
PUMPS (FUTURE)	38.20
LIGHTING	0.70
RECEPTACLES	0.72
AIR CONDITIONING	6.40
MISCELLANEOUS	7.00
TOTAL	193.10

193.10 KVA @ 480V, 3ø = 232.65 AMPS.

LINE LEGEND

- (BOLD) NEW CONSTRUCTION
- (LIGHT) EXISTING TO REMAIN
- (DASHED) TO BE REMOVED
- (SHADED) FUTURE

BID DOCUMENTS

IF THIS BAR DOES NOT MEASURE 1" THEN DRAWING HAS BEEN REDUCED SCALE ACCORDINGLY 0 1"

CARASTRO & ASSOCIATES, INC.
CONSULTING ENGINEERS EB-0001160
2609 W. DE LEON STREET TAMPA, FLORIDA 33609
TELEPHONE: (813) 874-9494 FAX: (813) 874-9794

King ENGINEERING ASSOCIATES, INC.
4921 Memorial Highway
One Memorial Center, Suite 300
Tampa, Florida 33634
Phone 813 880-8881
Fax 813 880-8882
www.kingengineering.com
Engineering License #2610

ELECTRICAL ENGINEER: PAUL S. CARASTRO, PE# 45830

© COPYRIGHT 2010 KING ENGINEERING ASSOCIATES, INC. DRAWINGS AND CONCEPTS MAY NOT BE USED OR REPRODUCED WITHOUT WRITTEN PERMISSION CONSENT IS HEREBY GRANTED SPECIFICALLY TO GOVERNMENTAL AGENCIES TO REPRODUCE THIS DOCUMENT IN COMPLIANCE WITH F.S. CHAPTER 119.

P:\-6099\6030\elec\6030-E4.0.dwg, August 21, 2019 10:16 AM, RICHARD BARBEITO

RECORD DRAWINGS
SURVEYED BY: DRAWN BY:
REVIEWED BY: PROJECT ENGINEER DATE
APPROVED BY: CITY ENGINEER MICHAEL D. QUILLEN, P.E. # 33721 DATE

REVISION	BY	DATE

CITY OF CLEARWATER, FLORIDA
ENGINEERING DEPARTMENT
100 S. MYRTLE AVE.
CLEARWATER, FL 33756

INVESTIGATE BEFORE YOU EXCAVATE
CALL 811
SUNSHINE STATE ONE CALL OF FLORIDA
www.callsunshine.com
(800) 432-4770
MIN. 48 HOURS BEFORE YOU EXCAVATE

NORTHEAST WRF GRIT REMOVAL, MOVING BELT FILTER AND EQUALIZATION SYSTEM IMPROVEMENTS

POWER ONE-LINE DIAGRAM - NEW 'MCC-16'

DWG NAME: 6030-E4.0.dwg	FIELD BOOK:	SURVEYED BY:	SCALE: VERT. N/A
CONTRACT NO.: 15-0045-UT	DATE DRAWN: JULY 2019	DRAWN BY: RFB	HORIZ. AS SHOWN
JOB NO.: 2110-210-002	DESIGNED BY: RFB	CHECKED BY: PSC	SHEET NO.: ## of ##

APPROVED FOR CONSTRUCTION
CITY ENGINEER MICHAEL D. QUILLEN, P.E. # 33721 DATE

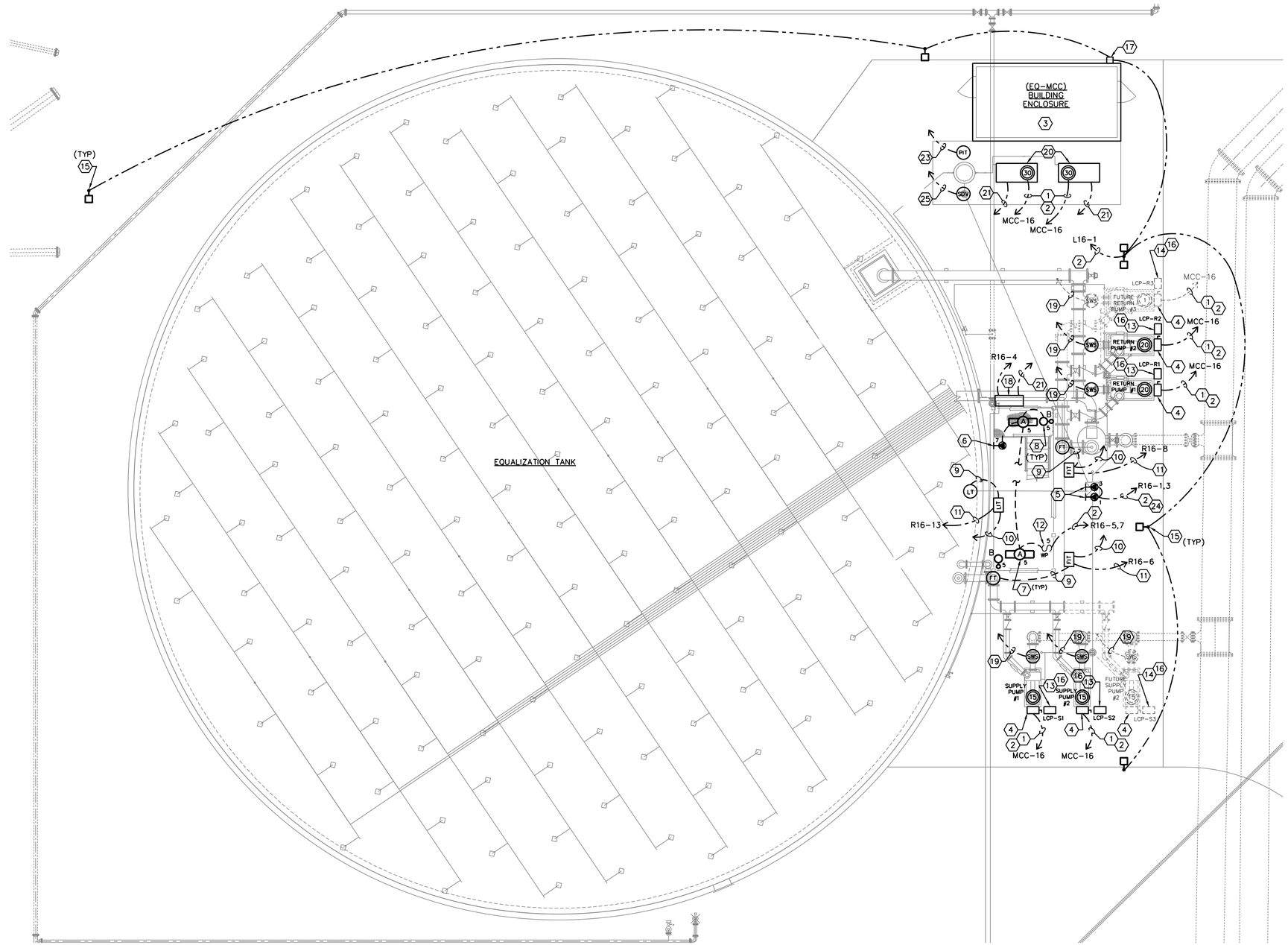

EQUALIZATION TANK PLAN – ELECTRICAL

GENERAL NOTES:

1. ALL ELECTRICAL EQUIPMENT, DISCONNECT SWITCHES, CONDUIT, JUNCTION BOXES & FITTINGS WITHIN THE EQUALIZATION TANK TO BE NEMA 9 (EXPLOSION PROOF) RATED.
2. ALL ELECTRICAL EQUIPMENT, DISCONNECT SWITCHES, CONDUIT, JUNCTION BOXES & FITTINGS WITHIN 10'-0" OF THE EXTERIOR (EQUALIZATION TANK) WALL TO BE NEMA 9 (EXPLOSION PROOF) RATED.
3. PROVIDE AND INSTALL SEAL-OFF FITTINGS FOR ALL CONDUITS PRIOR TO ENTERING ELECTRICAL BUILDING ENCLOSURE EQ-MCC.
4. THIS DRAWING IS NOT TO SCALE. CONTRACTOR TO FIELD MEASURE ALL DISTANCES/DIMENSIONS BEFORE NEW INSTALLATION IS EXECUTED.
5. PROVIDE AND INSTALL ALL CONDUITS WITH PULL STRING FOR FUTURE EQUIPMENT LOCATIONS. ALL FUTURE CONDUITS TO BE CAPPED, AND IDENTIFIED AS "FUTURE."

DRAWING NOTES:

1. SEE POWER ONE-LINE DIAGRAM ON DRAWING E4.0 FOR CONDUIT AND CONDUCTOR SIZES.
2. TO ELECTRICAL BUILDING ENCLOSURE EQ-MCC.
3. SEE ENLARGED ELECTRICAL BUILDING ENCLOSURE EQ-MCC ON DRAWING E3.2.
4. SEE PANEL ONE-LINE DIAGRAM ON DRAWING E4.0 FOR SIZE AND EQUIPMENT INFORMATION.
5. EXPLOSION PROOF (125VAC.) RECEPTACLE FOR NEW SUMP PUMP. EATON CROUSE-HINDS NO. CFSC175-2023-M15.
6. EXPLOSION PROOF (125VAC.) RECEPTACLE. EATON CROUSE-HINDS NO. CFS175-2023-M15.
7. NEW 4' LIGHT FIXTURE TO BE INSTALLED BELOW EACH LANDING.
8. SEE HANDRAIL LIGHT FIXTURE 'B' DETAIL ON DRAWING E7.0.
9. 3/4" CONDUIT WITH MANUFACTURER SUPPLIED CABLE.
10. 2 NO. 16 TSP (4-20 MA) – 3/4"C. TO NEW MASTER CONTROL PANEL 'MCP-16'. MASTER CONTROL PANEL LOCATED IN BUILDING ENCLOSURE EQ-MCC.
11. 2 NO. 12 AND 1 NO. 12 E.G. – 3/4"C.
12. EXPLOSION PROOF (125VAC.) LIGHT SWITCH.
13. NEW LOCAL CONTROL PANEL. SEE LOCAL CONTROL PANEL SCHEDULE ON DRAWING E6.1.
14. FUTURE LOCAL CONTROL PANEL. SEE LOCAL CONTROL PANEL SCHEDULE ON DRAWING E6.1.
15. NEW POLE MOUNTED (LED) LIGHT FIXTURE. SEE POLE LIGHTING DETAIL ON DRAWING E7.0.
16. SEE LOCAL CONTROL PANEL DETAIL #1 AND LOCAL CONTROL PANEL ELEVATION #2 ON DRAWING E7.0.
17. PHOTOCELL INTERMATIC NO. K4136M, 120V, NEMA 4X (STAINLESS STEEL) RATED. MOUNT 10' ON NORTH SIDE OF BUILDING AND FACE NORTH.
18. NEW SOLENOID CONTROL PANEL 'EMX-VM-1' LOCATED ON TOP OF STRUCTURAL PLATFORM.
19. 4 NO. 12 – 3/4"C. TO NEW MASTER CONTROL PANEL 'MCP-16'. MASTER CONTROL PANEL LOCATED IN BUILDING ENCLOSURE EQ-MCC.
20. NEW COMPRESSOR EQUIPMENT.
21. 8 NO. 12 – 3/4"C. AND 2 NO. 16 TSP (4-20 mA) – 3/4"C. TO CONTROL PANEL 'EMX-MCP'. CONTROL PANEL 'EMX-MCP LOCATED IN BUILDING ENCLOSURE EQ-MCC.
22. 8 NO. 12 – 3/4"C. TO CONTROL PANEL 'EMX-MCP'. CONTROL PANEL 'EMX-MCP LOCATED IN BUILDING ENCLOSURE EQ-MCC.
23. 1 NO. 16 TSP (4-20 mA) – 3/4"C. TO CONTROL PANEL 'EMX-MCP'. CONTROL PANEL 'EMX-MCP LOCATED IN BUILDING ENCLOSURE EQ-MCC.
24. 4 NO. 12 AND 1 NO. 12 E.G. – 3/4"C.
25. 2 NO. 12 – 3/4"C. TO CONTROL PANEL 'EMX-MCP'. CONTROL PANEL 'EMX-MCP LOCATED IN BUILDING ENCLOSURE EQ-MCC.

BID DOCUMENTS

LINE LEGEND

- NEW CONTRUCTION
- EXISTING TO REMAIN
- FUTURE

IF THIS BAR DOES NOT MEASURE 1" THEN DRAWING HAS BEEN REDUCED SCALE ACCORDINGLY

CARASTRO & ASSOCIATES, INC.
CONSULTING ENGINEERS EB-0001160
2609 W. DE LEON STREET TAMPA, FLORIDA 33609
TELEPHONE: (813) 874-9494 FAX: (813) 874-9794

King
ENGINEERING ASSOCIATES, INC.
4921 Memorial Highway
One Memorial Center, Suite 300
Tampa, Florida 33634
Phone 813 880-8881
Fax 813 880-8882
www.kingengineering.com
Engineering License #2610

ELECTRICAL ENGINEER: PAUL S. CARASTRO, PE# 45830

© COPYRIGHT 2010 KING ENGINEERING ASSOCIATES, INC. DRAWINGS AND CONCEPTS MAY NOT BE USED OR REPRODUCED WITHOUT WRITTEN PERMISSION CONSENT IS HEREBY GRANTED SPECIFICALLY TO GOVERNMENTAL AGENCIES TO REPRODUCE THIS DOCUMENT IN COMPLIANCE WITH F.S. CHAPTER 119.

RECORD DRAWINGS

SURVEYED BY: DRAWN BY:
REVIEWED BY: PROJECT ENGINEER DATE
APPROVED BY: CITY ENGINEER MICHAEL D. QUILLEN, P.E. # 33721 DATE

REVISION	BY	DATE

CITY OF CLEARWATER, FLORIDA
ENGINEERING DEPARTMENT
100 S. MYRTLE AVE.
CLEARWATER, FL 33756

CALL 811 SUNSHINE STATE ONE CALL OF FLORIDA www.callsunshine.com (800) 432-4770 MIN. 48 HOURS BEFORE YOU EXCAVATE

NORTHEAST WRF GRIT REMOVAL, MOVING BELT FILTER AND EQUALIZATION SYSTEM IMPROVEMENTS

EQUALIZATION TANK PLAN - ELECTRICAL

DWG NAME: 6030-E4.1.dwg	FIELD BOOK:	SURVEYED BY:	SCALE: VERT. N/A
CONTRACT NO.: 15-0045-UT	DATE DRAWN: JULY 2019	DRAWN BY: RFB	HORIZ. AS SHOWN
JOB NO.: 2110-210-002	DESIGNED BY: RFB	CHECKED BY: PSC	SHEET NO.: ## of ##

APPROVED FOR CONSTRUCTION
CITY ENGINEER MICHAEL D. QUILLEN, P.E. # 33721 DATE

P:\-6099\6030\elec\6030-E4.1.dwg, August 21, 2019 1:47 PM, RICHARD BARBEITO

(NEW PANEL) (LOCATED IN MCC-15 (SF-MCC ENCLOSURE)

PANEL: L15

SERVICE: 277/ 480 V, 3ϕ, 4W SECTION 1

AMPS: 100
MAIN: MCB
MODEL: NF
FEED-THRU LUGS: YES

MOUNT: FLUSH
ENCLOSURE: NEMA 1
AIC: 22,000

CKT NUM	DESCRIPTION	CODE	BREAKER A	BREAKER P	CONNECTED LOAD (KVA) A	B	C	A	B	C	BREAKER A	BREAKER P	CODE	DESCRIPTION	CKT NUM
1	GRIT REMOVAL CONTROL PANEL (EX)	EQ	30	3	3.32			0.48			20	3	EQ	**GRIT CLASSIFIER CONTROLPNL #2 (NEW)**	2
3	GRIT REMOVAL CONTROL PANEL (EX)	EQ				3.32			0.48				EQ	**GRIT CLASSIFIER CONTROLPNL #2 (NEW)**	4
5	GRIT REMOVAL CONTROL PANEL (EX)	EQ					3.32			0.48			EQ	**GRIT CLASSIFIER CONTROLPNL #2 (NEW)**	6
7	ODOR CONTROL UNIT #2 (EX)	EQ	15	3	1.66			1.66			15	3	EQ	YAM PACKER CONTROL PANEL (EX)	8
9	ODOR CONTROL UNIT #2 (EX)	EQ				1.66			1.66				EQ	YAM PACKER CONTROL PANEL (EX)	10
11	ODOR CONTROL UNIT #2 (EX)	EQ					1.66			1.66			EQ	YAM PACKER CONTROL PANEL (EX)	12
13	**MACERATOR MASTER CTRL. PNL. (NEW)**	EQ	15	3	1.27			0.00				1		SPACE	14
15	**MACERATOR MASTER CTRL. PNL. (NEW)**	EQ				1.27			0.00			1		SPACE	16
17	**MACERATOR MASTER CTRL. PNL. (NEW)**	EQ					1.27			0.00		1		SPACE	18
19	SPACE			1	0.00			0.00				1		SPACE	20
21	SPACE			1		0.00			0.00			1		SPACE	22
23	SPACE			1			0.00			0.00		1		SPACE	24
25	SPACE			1	0.00			0.00				1		SPACE	26
27	SPACE			1		0.00			0.00			1		SPACE	28
29	SPACE			1			0.00			0.00		1		SPACE	30
					6.3	6.3	6.3	2.1	2.1	2.1					

	CONNECTED LOAD (KVA)	DEMAND FACTOR	DEMAND LOAD (KVA)	MIN NEC LOAD (KVA)	MIN NEC LOAD (AMPS)	
LIGHTING (LTG)	0.0	1.25	0.0	0.0		* PER NEC 215.3
RECEPTACLES (REC)	0.0	*	0.0	0.0		* PER NEC 220.44
AC (NON COINCID)(AC NC)	0.0	1.0	0.0	0.0		* PER NEC 220.60
HEAT (NON COINCID)(H NC)	0.0	1.0	0.0	0.0		* PER NEC 220.60
HVAC (COINCID)(HVAC C)	0.0	1.0	0.0	0.0		
EQUIPMENT (EQ)	25.2	1.0	25.2	25.2		
MOTORS (MTR)	0.0	1.0	0.0	0.0		
LARGEST MOTOR	0.0	1.25	0.0	0.0		* PER NEC 430.24
MISCELLANEOUS (MISC)	0.0	1.0	0.0	0.0		
TOTAL	25.2		25.2	25.2	**30.3** AMPS	

(NEW PANEL) (LOCATED IN MCC-16 (FET-MCC ENCLOSURE)

PANEL: L16

SERVICE: 277/ 480 V, 3ϕ, 4W SECTION 1

AMPS: 100
MAIN: MCB
MODEL: NF
FEED-THRU LUGS: YES

MOUNT: FLUSH
ENCLOSURE: NEMA 1
AIC: 22,000

CKT NUM	DESCRIPTION	CODE	BREAKER A	BREAKER P	CONNECTED LOAD (KVA) A	B	C	A	B	C	BREAKER A	BREAKER P	CODE	DESCRIPTION	CKT NUM
1	LIGHTING POLES	LTG	20	1	0.84			0.00				1		SPACE	2
3	SPACE			1		0.00			0.00			1		SPACE	4
5	SPACE			1			0.00			0.00		1		SPACE	6
7	SPACE			1	0.00			0.00				1		S[ACE	8
9	SPACE			1		0.00			0.00			1		SPACE	10
11	SPACE			1			0.00			0.00		1		SPACE	12
13	SPACE			1	0.00			0.00				1		SPACE	14
15	SPACE			1		0.00			0.00			1		SPACE	16
17	SPACE			1			0.00			0.00		1		SPACE	18
19	SPACE			1	0.00			0.00				1		SPACE	20
21	SPACE			1		0.00			0.00			1		SPACE	22
23	SPACE			1			0.00			0.00		1		SPACE	24
25	SPACE			1	0.00			0.00				1		SPACE	26
27	SPACE			1		0.00			0.00			1		SPACE	28
29	SPACE			1			0.00			0.00		1		SPACE	30
					0.8	0.0	0.0	0.0	0.0	0.0					

	CONNECTED LOAD (KVA)	DEMAND FACTOR	DEMAND LOAD (KVA)	MIN NEC LOAD (KVA)	MIN NEC LOAD (AMPS)	
LIGHTING (LTG)	0.8	1.25	0.8	1.1		* PER NEC 215.3
RECEPTACLES (REC)	0.0	*	0.0	0.0		* PER NEC 220.44
AC (NON COINCID)(AC NC)	0.0	1.0	0.0	0.0		* PER NEC 220.60
HEAT (NON COINCID)(H NC)	0.0	1.0	0.0	0.0		* PER NEC 220.60
HVAC (COINCID)(HVAC C)	0.0	1.0	0.0	0.0		
EQUIPMENT (EQ)	0.0	1.0	0.0	0.0		
MOTORS (MTR)	0.0	1.0	0.0	0.0		
LARGEST MOTOR	0.0	1.25	0.0	0.0		* PER NEC 430.24
MISCELLANEOUS (MISC)	0.0	1.0	0.0	0.0		
TOTAL	0.8		0.8	1.1	**1.3** AMPS	

(NEW PANEL) (LOCATED IN MCC-15 (SF-MCC ENCLOSURE)

PANEL: R15

SERVICE: 120/ 208 V, 3ϕ, 4W SECTION 1

AMPS: 100
MAIN: MCB
MODEL: NQOD
FEED-THRU LUGS: YES

MOUNT: FLUSH
ENCLOSURE: NEMA 1
AIC: 10,000

CKT NUM	DESCRIPTION	CODE	BREAKER A	BREAKER P	CONNECTED LOAD (KVA) A	B	C	A	B	C	BREAKER A	BREAKER P	CODE	DESCRIPTION	CKT NUM
1	LIGHTING	LTG	20	1	0.20			0.33			20	1	LTG	EXTERIOR LIGHTING	2
3	RECEPTACLES	REC	20	1		0.54			0.42		20	2	REC	RECEPTACLE (SUMP PUMP)	4
5	MCP-15	MISC	20	1			0.40			0.42			REC	RECEPTACLE (SUMP PUMP)	6
7	LIT (SLUDGE PUMP #1)	MISC	20	1	0.30			0.30			20	1	MISC	LIT (SLUDGE PUMP #2)	8
9	LIT (SLUDGE PUMP #3)	MISC	20	1		0.30			0.30		20	1	MISC	LIT (SLUDGE PUMP #4) FUTURE	10
11	LIT (SCUM PUMP)	MISC	20	1			0.30			0.60	20	1	MISC	MOVING BELT FILTER CTRL. PNL #1	12
13	MANAGED ETHERNET SWITCH	MISC	20	1	0.60			0.60			20	1	MISC	MOVING BELT FILTER CTRL. PNL #2	14
15	FIT (MOVING BELT FILTER #1)	MISC	20	1		0.30			0.60		20	1	MISC	MOVING BELT FILTER CTRL. PNL #3	16
17	FIT (MOVING BELT FILTER #2)	MISC	20	1			0.30			0.80	20	1	REC	SUMP PUMP (MACERATOR)	18
19	FIT (MOVING BELT FILTER #3)	MISC	20	1	0.30			0.80			20	1	REC	SUMP PUMP (MACERATOR)	20
21	FIT (MOVING BELT FILTER #4) FUTURE	MISC	20	1		0.30			0.80		20	1	REC	SUMP PUMP (MOVING BELT FILTER)	22
23	FIT (MACERATOR PUMP)	MISC	20	1			0.30			0.80	20	1	REC	SUMP PUMP (MOVING BELT FILTER)	24
25	SPACE			1	0.00			0.00				1		SPACE	26
27	SPACE			1		0.00			0.00			1		SPACE	28
29	SPACE			1			0.00			0.00		1		SPACE	30
					1.4	1.4	1.3	2.0	2.1	2.6					

	CONNECTED LOAD (KVA)	DEMAND FACTOR	DEMAND LOAD (KVA)	MIN NEC LOAD (KVA)	MIN NEC LOAD (AMPS)	
LIGHTING (LTG)	0.5	1.25	0.5	0.7		* PER NEC 215.3
RECEPTACLES (REC)	4.6	*	4.6	4.6		* PER NEC 220.44
AC (NON COINCID)(AC NC)	0.0	1.0	0.0	0.0		* PER NEC 220.60
HEAT (NON COINCID)(H NC)	0.0	1.0	0.0	0.0		* PER NEC 220.60
HVAC (COINCID)(HVAC C)	0.0	1.0	0.0	0.0		
EQUIPMENT (EQ)	0.0	1.0	0.0	0.0		
MOTORS (MTR)	0.0	1.0	0.0	0.0		
LARGEST MOTOR	0.0	1.25	0.0	0.0		* PER NEC 430.24
MISCELLANEOUS (MISC)	5.8	1.0	5.8	5.8		
TOTAL	10.9		10.9	11.0	**30.7** AMPS	

(NEW PANEL) (LOCATED IN MCC-16 (FET-MCC ENCLOSURE)

PANEL: R16

SERVICE: 120/ 208 V, 3ϕ, 4W SECTION 1

AMPS: 100
MAIN: MCB
MODEL: NQOD
FEED-THRU LUGS: YES

MOUNT: FLUSH
ENCLOSURE: NEMA 1
AIC: 10,000

CKT NUM	DESCRIPTION	CODE	BREAKER A	BREAKER P	CONNECTED LOAD (KVA) A	B	C	A	B	C	BREAKER A	BREAKER P	CODE	DESCRIPTION	CKT NUM
1	RECEPTACLE (SUMP PUMP)	REC	20	1	0.80			0.60			20	1	MISC	EMX-MCP	2
3	RECEPTACLE (SUMP PUMP)	REC	20	1		0.80			0.60		20	1	MISC	EMX-VM-1	4
5	STAIRWELL LIGHTING	LTG	20	1			0.25			0.20	20	1	MISC	FIT - FEED PUMP	6
7	STAIRWELL RECEPTACLES	REC	20	1	0.18			0.20			20	1	MISC	FIT - RETURN PUMP	8
9	RECEPTACLES - LIGHT POLES	REC	20	1		0.72			0.40		20	1	MISC	MCP-16	10
11	LIGHTING	LTG	20	1			0.20			0.54	20	1	REC	RECPTACLES	12
13	LIT	MISC	20	1	0.20			0.60			20	1	MISC	MANAGED ETHERNET SWITCH	14
15	SPACE			1		0.00			0.00			1		SPACE	16
17	SPACE			1			0.00			0.00		1		SPACE	18
19	SPACE			1	0.00			0.00				1		SPACE	20
21	SPACE			1		0.00			0.00			1		SPACE	22
23	SPACE			1			0.00			0.00		1		SPACE	24
25	SPACE			1	0.00			0.00				1		SPACE	26
27	SPACE			1		0.00			0.00			1		SPACE	28
29	SPACE			1			0.00			0.00		1		SPACE	30
					1.2	1.5	0.5	1.4	1.0	0.7					

	CONNECTED LOAD (KVA)	DEMAND FACTOR	DEMAND LOAD (KVA)	MIN NEC LOAD (KVA)	MIN NEC LOAD (AMPS)	
LIGHTING (LTG)	0.5	1.25	0.5	0.6		* PER NEC 215.3
RECEPTACLES (REC)	3.0	*	3.0	3.0		* PER NEC 220.44
AC (NON COINCID)(AC NC)	0.0	1.0	0.0	0.0		* PER NEC 220.60
HEAT (NON COINCID)(H NC)	0.0	1.0	0.0	0.0		* PER NEC 220.60
HVAC (COINCID)(HVAC C)	0.0	1.0	0.0	0.0		
EQUIPMENT (EQ)	0.0	1.0	0.0	0.0		
MOTORS (MTR)	0.0	1.0	0.0	0.0		
LARGEST MOTOR	0.0	1.25	0.0	0.0		* PER NEC 430.24
MISCELLANEOUS (MISC)	2.8	1.0	2.8	2.8		
TOTAL	6.3		6.3	6.4	**17.8** AMPS	

BID DOCUMENTS

IF THIS BAR DOES NOT MEASURE 1" THEN DRAWING HAS BEEN REDUCED SCALE ACCORDINGLY 0 1"

CARASTRO & ASSOCIATES, INC.
CONSULTING ENGINEERS EB-0001160
2609 W. DE LEON STREET TAMPA, FLORIDA 33609
TELEPHONE: (813) 874-9494 FAX: (813) 874-9794

King ENGINEERING ASSOCIATES, INC.
4921 Memorial Highway
One Memorial Center, Suite 300
Tampa, Florida 33634
Phone 813 880-8881
Fax 813 880-8882
www.kingengineering.com
Engineering License #2610

ELECTRICAL ENGINEER: PAUL S. CARASTRO, PE# 45830

RECORD DRAWINGS
SURVEYED BY: DRAWN BY:
REVIEWED BY: PROJECT ENGINEER DATE
APPROVED BY: CITY ENGINEER MICHAEL D. QUILLEN, P.E. # 33721 DATE

REVISION	BY	DATE

CITY OF CLEARWATER, FLORIDA
ENGINEERING DEPARTMENT
100 S. MYRTLE AVE.
CLEARWATER, FL 33756

INVESTIGATE BEFORE YOU EXCAVATE CALL 811 SUNSHINE STATE ONE CALL OF FLORIDA www.callsunshine.com (800) 432-4770 MIN. 48 HOURS BEFORE YOU EXCAVATE

NORTHEAST WRF GRIT REMOVAL, MOVING BELT FILTER AND EQUALIZATION SYSTEM IMPROVEMENTS

PANEL SCHEDULES

DWG NAME: 6030-E5.0.dwg	FIELD BOOK:	SURVEYED BY:	SCALE: VERT. N/A
CONTRACT NO.: 15-0045-UT	DATE DRAWN: JULY 2019	DRAWN BY: RFB	HORIZ. AS SHOWN
JOB NO.: 2110-210-002	DESIGNED BY: RFB	CHECKED BY: PSC	SHEET NO.: ## of ##

APPROVED FOR CONSTRUCTION
CITY ENGINEER MICHAEL D. QUILLEN, P.E. # 33721 DATE

© COPYRIGHT 2010 KING ENGINEERING ASSOCIATES, INC. DRAWINGS AND CONCEPTS MAY NOT BE USED OR REPRODUCED WITHOUT WRITTEN PERMISSION. CONSENT IS HEREBY GRANTED SPECIFICALLY TO GOVERNMENTAL AGENCIES TO REPRODUCE THIS DOCUMENT IN COMPLIANCE WITH F.S. CHAPTER 119.

P:\6099\6030\elec\6030-E5.0.dwg, August 21, 2019 1:50 PM, RICHARD BARBEITO

(NEW PANEL)

(LOCATED IN ELECTRICAL ROOM (HEADWORKS)

PANEL: L4

SERVICE: 277/ 480 V, 3Φ, 4W

SECTION 1

AMPS: 60
MAIN: CIRCUIT BREAKER
MODEL: NF
FEED-THRU LUGS: YES

MOUNT: SURFACE
ENCLOSURE: NEMA 4X
AIC: 22,000

CKT NUM	DESCRIPTION	CODE	BREAKER A	BREAKER P	CONNECTED LOAD (KVA) A	B	C	A	B	C	BREAKER A	BREAKER P	CODE	DESCRIPTION	CKT NUM
1	LTG - ELECTRICAL ROOM (EXISTING)	LTG	20	1	0.60			1.20			20	1	LTG	LTG - DOWNSTAIRS (EXISTING)	2
3	LTG - UPSTAIRS (EXISTING)	LTG	20	1		1.20			1.20		20	1	LTG	LTG - EXTERIOR (EXISTING)	4
5	PANEL 'R4' (VIA XFMR)	EQ	35	2			4.45			1.20	20	1	LTG	LTG - PUMP DOWNSTAIRS (EXISTING)	6
7	PANEL 'R4' (VIA XFMR)	EQ			4.45			0.00				1		SPACE	8
9	SPACE			1		0.00			0.00			1		SPACE	10
11	SPACE			1			0.00			0.00		1		SPACE	12
13	SPACE			1	0.00			0.00				1		SPACE	14
15	SPACE			1		0.00			0.00			1		SPACE	16
17	SPACE			1			0.00			0.00		1		SPACE	18
19	SPACE			1	0.00			0.00				1		SPACE	20
21	SPACE			1		0.00			0.00			1		SPACE	22
23	SPACE			1			0.00			0.00		1		SPACE	24
25	SPACE			1	0.00			0.00				1		SPACE	26
27	SPACE			1		0.00			0.00			1		SPACE	28
29	SPACE			1			0.00			0.00		1		SPACE	30
					5.1	1.2	4.5	1.2	1.2	1.2					

	CONNECTED LOAD (KVA)	DEMAND FACTOR	DEMAND LOAD (KVA)	MIN NEC LOAD (KVA)	MIN NEC LOAD (AMPS)	
LIGHTING (LTG)	5.4	1.25	5.4	6.8		* PER NEC 215.3
RECEPTACLES (REC)	0.0	*	0.0	0.0		* PER NEC 220.44
AC (NON COINCID)(AC NC)	0.0	1.0	0.0	0.0		* PER NEC 220.60
HEAT (NON COINCID)(H NC)	0.0	1.0	0.0	0.0		* PER NEC 220.60
HVAC (COINCID)(HVAC C)	0.0	1.0	0.0	0.0		
EQUIPMENT (EQ)	8.9	1.0	8.9	8.9		
MOTORS (MTR)	0.0	1.0	0.0	0.0		
LARGEST MOTOR	0.0	1.25	0.0	0.0		* PER NEC 430.24
MISCELLANEOUS (MISC)	0.0	1.0	0.0	0.0		
TOTAL	14.3		14.3	15.7	**18.8** AMPS	

(NEW PANEL)

(LOCATED IN ELECTRICAL ROOM (HEADWORKS)

PANEL: R4

SERVICE: 120/ 240 V, 1Φ, 3W

AMPS: 60
MAIN: CIRCUIT BREAKER
MODEL: NQ
FEED-THRU LUGS: YES

MOUNT: SURFACE
ENCLOSURE: NEMA 4X
AIC: 10,000

CKT NUM	DESCRIPTION	CODE	BREAKER A	BREAKER P	CONNECTED LOAD (KVA) A	B	A	B	BREAKER A	BREAKER P	CODE	DESCRIPTION	CKT NUM
1	EXISTING LOAD	MISC	20	1	0.20		0.20		20	1	MISC	EXISTING LOAD	2
3	EXISTING LOAD	MISC	20	1		0.20		0.20	20	1	MISC	EXISTING LOAD	4
5	EXISTING LOAD	MISC	20	1	0.20		0.20		20	1	MISC	EXISTING LOAD	6
7	EXISTING LOAD	MISC	20	1		0.20		0.40	20	1	MISC	GATE	8
9	EXISTING LOAD	MISC	20	1	0.20		0.34		20	2	HVAC C	AIR HANDLER	10
11	PICKET SOLINOID VALVE	MISC	20	1		0.20		0.34			HVAC C	AIR HANDLER	12
13	EXISTING LOAD	MISC	50	2	2.00		0.20		20	1	MISC	SAMPLER	14
15	EXISTING LOAD	MISC				2.00		0.30	**20**	**1**	**MISC**	**FIT-101 (GRIT PUMPS)**	**16**
17	AIR CONDENSER	HVAC C	20	2	0.30		0.40		20	1	REC	REFRIGERATOR	18
19	AIR CONDENSER	HVAC C				0.30		0.20	20	1	MISC	SAMPLER	20
21	SPACE			1	0.00		0.20		20	2	MISC	SAMPLER	22
23	SPACE			1		0.00		0.20			MISC	SAMPLER	24
25	SPACE			1	0.00		0.20		20	1	MISC	EXISTING LOAD	26
27	SPACE			1		0.00		0.00		1		SPACE	28
29	SPACE			1	0.00		0.00			1		SPACE	30
					2.9	2.9	1.7	1.6					

	CONNECTED LOAD (KVA)	DEMAND FACTOR	DEMAND LOAD (KVA)	MIN NEC LOAD (KVA)	MIN NEC LOAD (AMPS)	
LIGHTING (LTG)	0.0	1.25	0.0	0.0		* PER NEC 215.3
RECEPTACLES (REC)	0.4	*	0.4	0.4		* PER NEC 220.44
AC (NON COINCID)(AC NC)	0.0	1.0	0.0	0.0		* PER NEC 220.60
HEAT (NON COINCID)(H NC)	0.0	1.0	0.0	0.0		* PER NEC 220.60
HVAC (COINCID) HVAC C)	1.3	1.0	1.3	1.3		
MISC. EQUIPMENT (EQ)	0.0	1.0	0.0	0.0		
MOTORS (MTR)	0.0	1.0	0.0	0.0		
LARGEST MTR	0.0	1.25	0.0	0.0		* PER NEC 430.24
MISCELLANEOUS (MISC)	7.5	1.0	7.5	7.5		
TOTAL	9.2		9.2	9.2	**38.3** AMPS	

BID DOCUMENTS

IF THIS BAR DOES NOT MEASURE 1" THEN DRAWING HAS BEEN REDUCED SCALE ACCORDINGLY 0 1"

CARASTRO & ASSOCIATES, INC.
CONSULTING ENGINEERS EB-0001160
2609 W. DE LEON STREET TAMPA, FLORIDA 33609
TELEPHONE: (813) 874-9494 FAX: (813) 874-9794

King
ENGINEERING ASSOCIATES, INC.
4921 Memorial Highway
One Memorial Center, Suite 300
Tampa, Florida 33634
Phone 813 880-8881
Fax 813 880-8882
www.kingengineering.com
Engineering License #2610

ELECTRICAL ENGINEER: PAUL S. CARASTRO, PE# 45830

RECORD DRAWINGS

SURVEYED BY: DRAWN BY:

REVIEWED BY: PROJECT ENGINEER DATE

APPROVED BY: CITY ENGINEER MICHAEL D. QUILLEN, P.E. # 33721 DATE

REVISION	BY	DATE

CITY OF CLEARWATER, FLORIDA
ENGINEERING DEPARTMENT
100 S. MYRTLE AVE.
CLEARWATER, FL 33756

INVESTIGATE BEFORE YOU EXCAVATE
CALL 811
SUNSHINE STATE ONE CALL OF FLORIDA
www.callsunshine.com
(800) 432-4770
MIN. 48 HOURS BEFORE YOU EXCAVATE

NORTHEAST WRF GRIT REMOVAL, MOVING BELT FILTER AND EQUALIZATION SYSTEM IMPROVEMENTS

PANEL SCHEDULES

DWG NAME: 6030-E5.1.dwg	FIELD BOOK:	SURVEYED BY:	SCALE: VERT. N/A
CONTRACT NO.: 15-0045-UT	DATE DRAWN: JULY 2019	DRAWN BY: RFB	HORIZ. AS SHOWN
JOB NO.: 2110-210-002	DESIGNED BY: RFB	CHECKED BY: PSC	SHEET NO.: ## of ##

APPROVED FOR CONSTRUCTION

CITY ENGINEER MICHAEL D. QUILLEN, P.E. # 33721 DATE

© COPYRIGHT 2010 KING ENGINEERING ASSOCIATES, INC. DRAWINGS AND CONCEPTS MAY NOT BE USED OR REPRODUCED WITHOUT WRITTEN PERMISSION CONSENT IS HEREBY GRANTED SPECIFICALLY TO GOVERNMENTAL AGENCIES TO REPRODUCE THIS DOCUMENT IN COMPLIANCE WITH F.S. CHAPTER 119.

P:\-6099\6030\elec\6030-E5.1.dwg, August 21, 2019 1:51 PM, RICHARD BARBEITO

LOCAL CONTROL PANEL SCHEDULE (EQUALIZATION TANK)

IDENTIFICATION	LOCATION	MOTOR	WIRE (ANALOG)	WIRE (DIGITAL)	TERMINATION
LCP-C1	ELEC. BLDG. (EQ-MCC)	COMPRESSOR #1	(3) #16 TSP (4-20mA) -3/4"C.	(10) #14 -3/4"C.	EMX-MCP
LCP-C2	ELEC. BLDG. (EQ-MCC)	COMPRESSOR #2	(3) #16 TSP (4-20mA) -3/4"C.	(10) #14 -3/4"C.	EMX-MCP
EMX-VM-1	EQUALIZATION TANK	VALVE CABINET	(3) #16 TSP (4-20mA) -3/4"C.	(10) #14 -3/4"C.	EMX-MCP
LCP-R1	EQUALIZATION TANK	RETURN PUMP #1	(3) #16 TSP (4-20mA) -3/4"C.	(10) #14 -3/4"C.	VFD (MCC-16)
LCP-R2	EQUALIZATION TANK	RETURN PUMP #2	(3) #16 TSP (4-20mA) -3/4"C.	(10) #14 -3/4"C.	VFD (MCC-16)
LCP-R3 (FUTURE)	EQUALIZATION TANK	RETURN PUMP #3 (FUTURE)	(3) #16 TSP (4-20mA) -3/4"C.	(10) #14 -3/4"C.	VFD (MCC-16) (FUTURE)
LCP-S1	EQUALIZATION TANK	SUPPLY PUMP #1	(3) #16 TSP (4-20mA) -3/4"C.	(10) #14 -3/4"C.	VFD (MCC-16)
LCP-S2	EQUALIZATION TANK	SUPPLY PUMP #2	(3) #16 TSP (4-20mA) -3/4"C.	(10) #14 -3/4"C.	VFD (MCC-16)
LCP-S3 (FUTURE)	EQUALIZATION TANK	SUPPLY PUMP #3 (FUTURE)	(3) #16 TSP (4-20mA) -3/4"C.	(10) #14 -3/4"C.	VFD (MCC-16) (FUTURE)

LOCAL CONTROL PANEL SCHEDULE (MOVING BELT FILTERS)

IDENTIFICATION	LOCATION	MOTOR	WIRE (ANALOG)	WIRE (DIGITAL)	TERMINATION
LCP-SL1	MOVING BELT FILTER	SLUDGE PUMP #1	(3) #16 TSP (4-20mA) -3/4"C.	(10) #14 -3/4"C.	VFD (MCC-15)
LCP-SL2	MOVING BELT FILTER	SLUDGE PUMP #2	(3) #16 TSP (4-20mA) -3/4"C.	(10) #14 -3/4"C.	VFD (MCC-15)
LCP-SL3	MOVING BELT FILTER	SLUDGE PUMP #3	(3) #16 TSP (4-20mA) -3/4"C.	(10) #14 -3/4"C.	VFD (MCC-15)
LCP-SL4 (FUTURE)	MOVING BELT FILTER	SLUDGE PUMP #4 (FUTURE)	(3) #16 TSP (4-20mA) -3/4"C.	(10) #14 -3/4"C.	VFD (MCC-15)
LCP-S1	MOVING BELT FILTER	BELT PRESS & BLOWER #1	(3) #16 TSP (4-20mA) -3/4"C.	(20) #14 -1"C.	MOVING BELT FILTER CTRL PANEL #1
LCP-S2	MOVING BELT FILTER	BELT PRESS & BLOWER #2	(3) #16 TSP (4-20mA) -3/4"C.	(20) #14 -1"C.	MOVING BELT FILTER CTRL PANEL #2
LCP-S3	MOVING BELT FILTER	BELT PRESS & BLOWER #3	(3) #16 TSP (4-20mA) -3/4"C.	(20) #14 -1"C.	MOVING BELT FILTER CTRL PANEL #3
LCP-S4 (FUTURE)	MOVING BELT FILTER	BELT PRESS & BLOWER #4 (FUTURE)	(3) #16 TSP (4-20mA) -3/4"C.	(20) #14 -1"C.	MOVING BELT FILTER CTRL PANEL #4
LCP-MAC	MOVING BELT FILTER	MACERATOR (GRINDER) PUMP	--	(10) #14 -3/4"C.	MCP-15

LOCAL CONTROL PANEL SCHEDULE (BELT FILTER FEED PUMPS)

IDENTIFICATION	LOCATION	MOTOR	WIRE (ANALOG)	WIRE (DIGITAL)	TERMINATION
LCP-SF1	FEED PUMP BUILDING	FEED PUMP #1	(3) #16 TSP (4-20mA) -3/4"C.	(10) #14 -3/4"C.	VFD (MCC-15)
LCP-SF2	FEED PUMP BUILDING	FEED PUMP #2	(3) #16 TSP (4-20mA) -3/4"C.	(10) #14 -3/4"C.	VFD (MCC-15)
LCP-SF3	FEED PUMP BUILDING	FEED PUMP #3	(3) #16 TSP (4-20mA) -3/4"C.	(10) #14 -3/4"C.	VFD (MCC-15)
LCP-SF4 (FUTURE)	FEED PUMP BUILDING	FEED PUMP #4 (FUTURE)	(3) #16 TSP (4-20mA) -3/4"C.	(10) #14 -3/4"C.	VFD (MCC-15)

LOCAL CONTROL PANEL SCHEDULE (GRIT PUMPS & CLASSIFER)

IDENTIFICATION	LOCATION	MOTOR	WIRE (ANALOG)	WIRE (DIGITAL)	TERMINATION
LCP-G1	INFLUENT BUILDING	GRIT PUMP #1	--	(10) #14 -3/4"C.	MOTOR STARTER (MCC-15)
LCP-G2	INFLUENT BUILDING	GRIT PUMP #2	--	(10) #14 -3/4"C.	MOTOR STARTER (MCC-15)
LCP-G3	INFLUENT BUILDING	GRIT PUMP #3	--	(10) #14 -3/4"C.	MOTOR STARTER (MCC-15)
LCP-G4	INFLUENT BUILDING	GRIT PUMP #4	--	(10) #14 -3/4"C.	MOTOR STARTER (MCC-15)
LCP-GC2	INFLUENT BUILDING	GRIT CLASSIFIER #2	--	(10) #14 -3/4"C.	GRIT CLASSIFIER CONTROL PANEL #2

BID DOCUMENTS

IF THIS BAR DOES NOT MEASURE 1" THEN DRAWING HAS BEEN REDUCED SCALE ACCORDINGLY 0 1"

CARASTRO & ASSOCIATES, INC.
CONSULTING ENGINEERS EB-0001160
2609 W. DE LEON STREET TAMPA, FLORIDA 33609
TELEPHONE: (813) 874-9494 FAX: (813) 874-9794

King
ENGINEERING ASSOCIATES, INC.
4921 Memorial Highway
One Memorial Center, Suite 300
Tampa, Florida 33634
Phone 813 880-8881
Fax 813 880-8882
www.kingengineering.com
Engineering License #2610

ELECTRICAL ENGINEER: PAUL S. CARASTRO, PE# 45830

RECORD DRAWINGS
SURVEYED BY: DRAWN BY:
REVIEWED BY: PROJECT ENGINEER DATE
APPROVED BY: CITY ENGINEER MICHAEL D. QUILLEN, P.E. # 33721 DATE

REVISION	BY	DATE

CITY OF CLEARWATER, FLORIDA
ENGINEERING DEPARTMENT
100 S. MYRTLE AVE.
CLEARWATER, FL 33756

INVESTIGATE BEFORE YOU EXCAVATE
CALL 811
SUNSHINE STATE ONE CALL OF FLORIDA
www.call811sunshine.com
(800) 432-4770
MIN. 48 HOURS BEFORE YOU EXCAVATE

NORTHEAST WRF GRIT REMOVAL, MOVING BELT FILTER AND EQUALIZATION SYSTEM IMPROVEMENTS

LOCAL CONTROL PANEL SCHEDULES

DWG NAME: 6030-E6.1.dwg	FIELD BOOK:	SURVEYED BY:	SCALE: VERT. N/A
CONTRACT NO.: 15-0045-UT	DATE DRAWN: JULY 2019	DRAWN BY: RFB	HORIZ. AS SHOWN
JOB NO.: 2110-210-002	DESIGNED BY: RFB	CHECKED BY: PSC	SHEET NO.: ## of ##

APPROVED FOR CONSTRUCTION
CITY ENGINEER MICHAEL D. QUILLEN, P.E. # 33721 DATE

© COPYRIGHT 2010 KING ENGINEERING ASSOCIATES, INC. DRAWINGS AND CONCEPTS MAY NOT BE USED OR REPRODUCED WITHOUT WRITTEN PERMISSION CONSENT IS HEREBY GRANTED SPECIFICALLY TO GOVERNMENTAL AGENCIES TO REPRODUCE THIS DOCUMENT IN COMPLIANCE WITH F.S. CHAPTER 119.

P:\-6099\6030\elec\6030-E6.1.dwg, August 21, 2019 1:51 PM, RICHARD BARBEITO

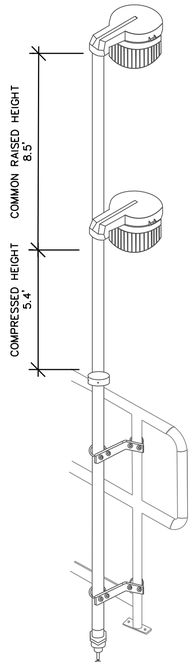

HANDRAIL LIGHT FIXTURE 'B' DETAIL

SCALE: NONE

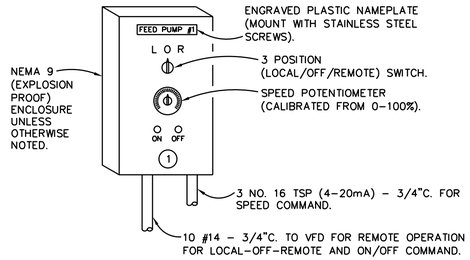

LOCAL CONTROL PANEL DETAIL #1

NOT TO SCALE (CONTROLLED VIA VFD)

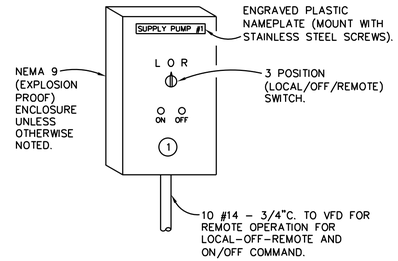

LOCAL CONTROL PANEL DETAIL #2

NOT TO SCALE (CONTROLLED VIA MOTOR STARTER)

DETAIL NOTE:

(1) CONTRACTOR TO PROVIDE A COMPLETELY WIRED PANEL TO NEMA & UL STANDARDS. (PANEL TO BE PRODUCED IN A UL CERTIFIED PANEL SHOP).

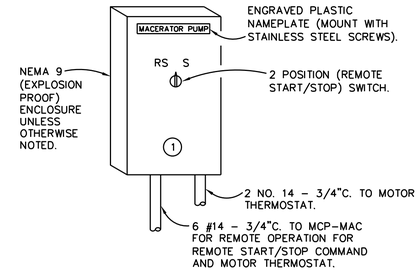

LOCAL CONTROL PANEL DETAIL #3

NOT TO SCALE (CONTROLLED VIA MOTOR STARTER)

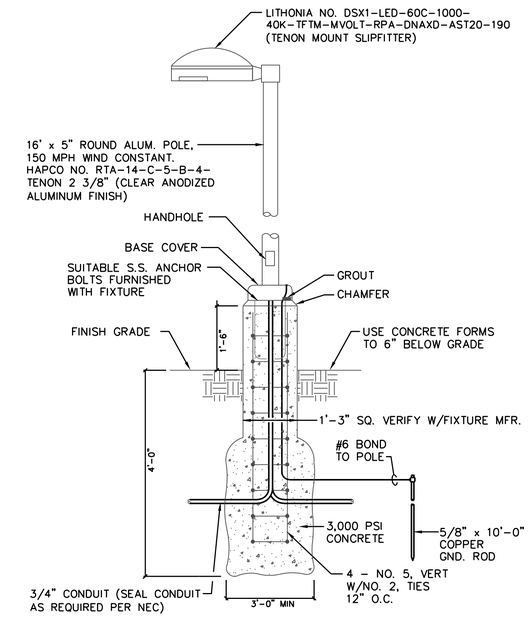

POLE MOUNTED LIGHT FIXTURE DETAIL

SCALE: NONE

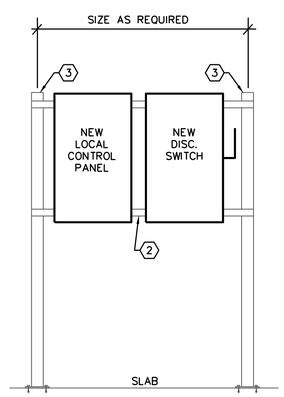

LOCAL CONTROL PANEL ELEVATION #1 (TYPICAL)

SCALE: NONE (MOUNTED ON SLAB/STRUCTURAL PLATFORM)

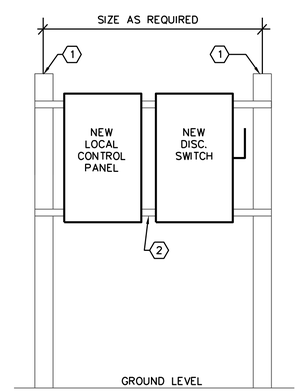

LOCAL CONTROL PANEL ELEVATION #2 (TYPICAL)

SCALE: NONE (MOUNTED ABOVE FINISHED GRADE)

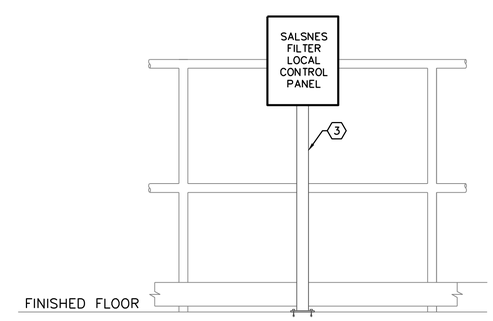

SALSNES FILTER LOCAL CONTROL PANEL ELEVATION #3 (TYPICAL)

SCALE: NONE (MOUNTED ON SLAB/STRUCTURAL PLATFORM)

GENERAL NOTES:

1. COORDINATE ALL LOCATIONS OF PROPOSED EQUIPMENT WITH CIVIL ENGINEER AND OWNER PRIOR TO INSTALLATION.

DRAWING NOTES:

(1) 10'-0" CONCRETE 6"x6" POSTS. 6' ABOVE FINISHED GRADE.

(2) 2 1/2"x2 1/2"x1/4" (STAINLESS STEEL) UNI-STRUT. (TYPICAL). USE ALL STAINLESS STEEL FITTINGS.

(3) 6'-0" (STAINLESS STEEL) DOUBLE SUPPORT (UNISTRUT) POST.USE ALL STAINLESS STEEL FITTINGS AND ANCHORBOLTS.

BID DOCUMENTS

IF THIS BAR DOES NOT MEASURE 1" THEN DRAWING HAS BEEN REDUCED SCALE ACCORDINGLY 0 1"

CARASTRO & ASSOCIATES, INC.
CONSULTING ENGINEERS EB-0001160
2609 W. DE LEON STREET TAMPA, FLORIDA 33609
TELEPHONE: (813) 874-9494 FAX: (813) 874-9794

King
ENGINEERING ASSOCIATES, INC.
4921 Memorial Highway
One Memorial Center, Suite 300
Tampa, Florida 33634
Phone 813 880-8881
Fax 813 880-8882
www.kingengineering.com
Engineering License #2610

ELECTRICAL ENGINEER: PAUL S. CARASTRO, PE# 45830

RECORD DRAWINGS
SURVEYED BY: DRAWN BY:
REVIEWED BY: PROJECT ENGINEER DATE
APPROVED BY: CITY ENGINEER MICHAEL D. QUILLEN, P.E. # 33721 DATE

REVISION	BY	DATE

CITY OF CLEARWATER, FLORIDA
ENGINEERING DEPARTMENT
100 S. MYRTLE AVE.
CLEARWATER, FL 33756

INVESTIGATE BEFORE YOU EXCAVATE
CALL 811
SUNSHINE STATE ONE CALL OF FLORIDA
www.callsunshine.com
(800) 432-4770
MIN. 48 HOURS BEFORE YOU EXCAVATE

NORTHEAST WRF GRIT REMOVAL, MOVING BELT FILTER AND EQUALIZATION SYSTEM IMPROVEMENTS

ELECTRICAL DETAILS

DWG NAME: 6030-E7.0.dwg	FIELD BOOK:	SURVEYED BY:	SCALE: VERT. N/A
CONTRACT NO.: 15-0045-UT	DATE DRAWN: JULY 2019	DRAWN BY: RFB	HORIZ. AS SHOWN
JOB NO.: 2110-210-002	DESIGNED BY: RFB	CHECKED BY: PSC	SHEET NO.: ## of ##

APPROVED FOR CONSTRUCTION
CITY ENGINEER MICHAEL D. QUILLEN, P.E. # 33721 DATE

© COPYRIGHT 2010 KING ENGINEERING ASSOCIATES, INC. DRAWINGS AND CONCEPTS MAY NOT BE USED OR REPRODUCED WITHOUT WRITTEN PERMISSION CONSENT IS HEREBY GRANTED SPECIFICALLY TO GOVERNMENTAL AGENCIES TO REPRODUCE THIS DOCUMENT IN COMPLIANCE WITH F.S. CHAPTER 119.

P:\-6099\6030\elec\6030-E7.0.dwg, August 21, 2019 1:52 PM, RICHARD BARBEITO

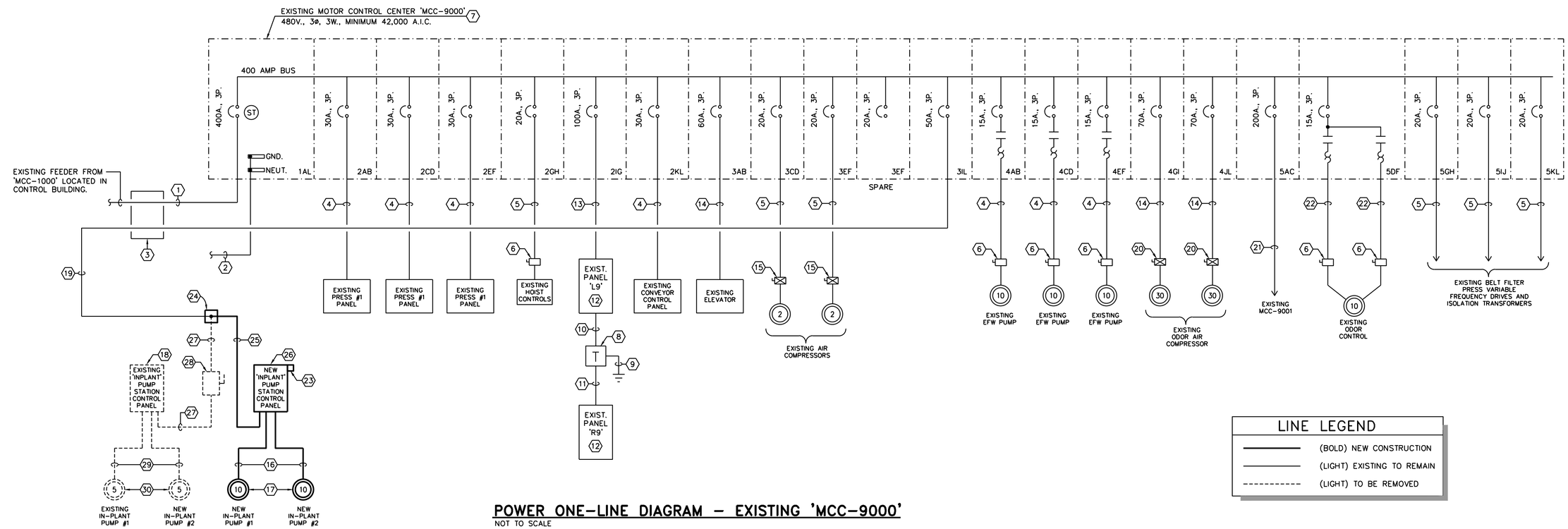

POWER ONE-LINE DIAGRAM – EXISTING 'MCC-9000'

NOT TO SCALE

LINE LEGEND	
———	(BOLD) NEW CONSTRUCTION
———	(LIGHT) EXISTING TO REMAIN
- - - - -	(LIGHT) TO BE REMOVED

NOTES:

1. EXISTING CONDUIT AND CONDUCTORS TO REMAIN.
2. EXISTING GROUND CONDUCTOR TO TO EXISTING GROUNDING GRID.
3. EXISTING MANHOLE MH-9 TO REMAIN.
4. EXISTING 3 NO. 10 AND 1 NO. 10 E.G. – 3/4"C. TO REMAIN.
5. EXISTING 3 NO. 12 AND 1 NO. 12 E.G. – 3/4"C. TO REMAIN.
6. EXISTING 30A. 3-POLE (NEMA 4X S.S.) DISCONNECT SWITCH TO REMAIN.
7. EXISTING MOTOR CONTROL CENTER TO REMAIN.
8. EXISTING 10 KVA 480-120/240V., 1PH., 3W. TRANSFORMER TO REMAIN.
9. EXISTING NO. 8 AWG GROUND CONDUCTOR TO REMAIN.
10. EXISTING 2 NO. 3 AND 1 NO. 8 G.C. – 1"C. TO REMAIN.
11. EXISTING 2 NO. 2/0 AND 1 NO. 4 E.G. – 1 1/2"C. TO REMAIN.
12. EXISTING PANELBOARD TO REMAIN.
13. EXISTING 4 NO. 3 AND 1 NO. 6 E.G. – 1 1/4"C. TO REMAIN.
14. EXISTING 3 NO. 6 AND 1 NO. 10 E.G. – 1"C. TO REMAIN.
15. EXISTING 30A. 3-POLE COMBINATION MOTOR STARTER TO REMAIN.
16. NEW 3 NO. 12 AND 1 NO. 12 E.G. – 3/4"C.
17. NEW SUBMERSIBLE PUMPS.
18. EXISTING PUMP STATION CONTROL PANEL TO REMOVED.
19. EXISTING 4 NO. 12 (CONTROLS), 3 NO. 8 (PHASE) AND 1 NO. 8 E.G. – 1 1/2"C. TO REMAIN.
20. EXISTING 100A. 3-POLE COMBINATION MOTOR STARTER TO REMAIN.
21. EXISTING 3 NO. 1/0 AND 1 NO. 6 E.G. – 2"C. TO REMAIN.
22. EXISTING 6 NO. 10 AND 1 NO. 12 E.G. – 1"C. TO REMAIN.
23. NEW SURGE PROTECTION DEVICE (PQ PROTECTION # PQC100) 480/277V., 3ø, 4W. OR PRE-APPROVED EQUIVALENT. CONNECT WITH 4 NO. 10 AND 1 NO. 10 E.G. – 3/4" C. CONNECT TO LOAD SIDE OF MAIN DISCONNECT SWITCH WITH MAX LENGTH 18" AND NO SHARP BENDS.
24. CONNECT NEW CONDUCTORS TO EXISTING CONDUCTORS IN NEW NEMA 4X (316 STAINLESS STEEL) JUNCTION BOX USING HIGH PRESS SPLICE OR EQUAL. NEW CONDUCTORS SHALL MATCH EXISTING.
25. NEW 4 NO. 12 (CONTROLS), 3 NO. 8 (PHASE) AND 1 NO. 8 E.G. – 1 1/2"C.
26. SEE ELECTRICAL DRAWINGS E7.2 FOR PUMP STATION CONTROL PANEL LAYOUT.
27. EXISTING 4 NO. 12 (CONTROLS), 3 NO. 8 (PHASE) AND 1 NO. 8 E.G. – 1 1/2"C. TO BE REMOVED.
28. EXISTING 60A. 3-POLE DISCONNECT SWITCH TO BE REMOVED.
29. EXISTING 3 NO. 12 AND 1 NO. 12 E.G. – 3/4"C. TO BE REMOVED.
30. EXISTING SUBMERSIBLE PUMPS TO BE REMOVED.

LOAD SUMMARY

LOAD DESCRIPTION	KVA
IN-PLANT PUMPS (REMOVED)	(12.10)
IN-PLANT PUMPS (ADDED)	22.28
TOTAL (ADDED)	10.18

BID DOCUMENTS

IF THIS BAR DOES NOT MEASURE 1" THEN DRAWING HAS BEEN REDUCED SCALE ACCORDINGLY (0 – 1")

CARASTRO & ASSOCIATES, INC.
CONSULTING ENGINEERS EB-0001160
2609 W. DE LEON STREET TAMPA, FLORIDA 33609
TELEPHONE: (813) 874-9494 FAX: (813) 874-9794

King
ENGINEERING ASSOCIATES, INC.
4921 Memorial Highway
One Memorial Center, Suite 300
Tampa, Florida 33634
Phone 813 880-8881
Fax 813 880-8882
www.kingengineering.com
Engineering License #2610

ELECTRICAL ENGINEER: PAUL S. CARASTRO, PE# 45830

RECORD DRAWINGS

SURVEYED BY: DRAWN BY:
REVIEWED BY: PROJECT ENGINEER DATE
APPROVED BY: CITY ENGINEER MICHAEL D. QUILLEN, P.E. # 33721 DATE

REVISION	BY	DATE

CITY OF CLEARWATER, FLORIDA
ENGINEERING DEPARTMENT
100 S. MYRTLE AVE.
CLEARWATER, FL 33756

INVESTIGATE BEFORE YOU EXCAVATE
CALL 811
SUNSHINE STATE ONE CALL OF FLORIDA
www.callsunshine.com
(800) 432-4770
MIN. 48 HOURS BEFORE YOU EXCAVATE

NORTHEAST WRF GRIT REMOVAL, MOVING BELT FILTER AND EQUALIZATION SYSTEM IMPROVEMENTS

POWER ONE-LINE DIAGRAM - EXISTING 'MCC-9000'

DWG NAME: 6030-E7.1.dwg	FIELD BOOK:	SURVEYED BY:	SCALE: VERT. N/A
CONTRACT NO.: 15-0045-UT	DATE DRAWN: JULY 2019	DRAWN BY: RFB	HORIZ. AS SHOWN
JOB NO.: 2110-210-002	DESIGNED BY: RFB	CHECKED BY: PSC	SHEET NO.: ## of ##

APPROVED FOR CONSTRUCTION
CITY ENGINEER MICHAEL D. QUILLEN, P.E. # 33721 DATE

© COPYRIGHT 2019 KING ENGINEERING ASSOCIATES, INC. DRAWINGS AND CONCEPTS MAY NOT BE USED OR REPRODUCED WITHOUT WRITTEN PERMISSION CONSENT IS HEREBY GRANTED SPECIFICALLY TO GOVERNMENTAL AGENCIES TO REPRODUCE THIS DOCUMENT IN COMPLIANCE WITH F.S. CHAPTER 119.

P:\-6099\6030\elec\6030-E7.1.dwg, August 21, 2019 1:55 PM, RICHARD BARBEITO

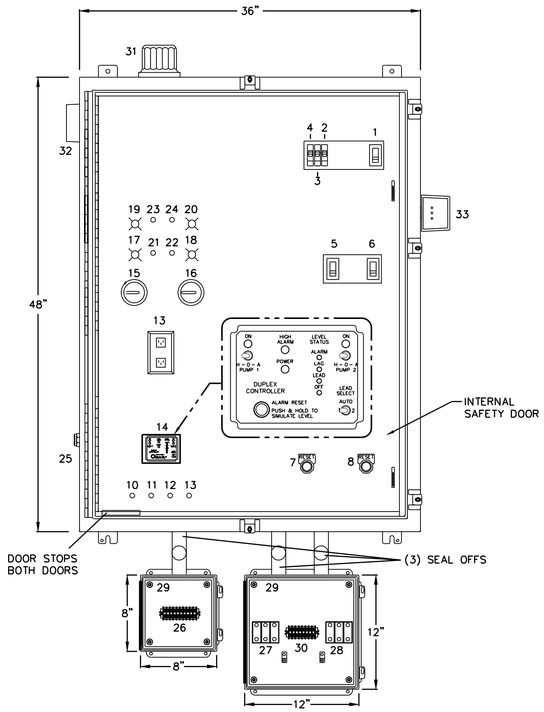

OUTER DOOR HAS BEEN REMOVED FOR CLARITY

IN-PLANT PUMP STATION CONTROL PANEL LAYOUT

NOT TO SCALE

1 – MAIN BREAKER (50A/3P)*
2 – SPARE BREAKER (20A/1P)
3 – CONTROL CIRCUIT BREAKER (15A/1P)
4 – DUPLEX RECEPTACLE BREAKER (20A/1P)
5 – MB1 MOTOR BREAKER 1 (35A/3P)*
6 – MB2 MOTOR BREAKER 2 (35A/3P)*
7 – OVERLOAD 1 RESET
8 – OVERLOAD 2 RESET
9 – DUPLEX RECEPTACLE (GFI)
10 – FTS1 FLOAT TEST SWITCH 1
11 – FTS2 FLOAT TEST SWITCH 2
12 – FTS3 FLOAT TEST SWITCH 3
13 – FTS4 FLOAT TEST SWITCH 4
14 – DUPLEXOR
15 – ELAPSE TIME METER 1
16 – ELAPSE TIME METER 2
17 – PL1 OVERTEMP 1
18 – PL2 OVERTEMP 2
19 – PL3 MOISTURE 1
20 – PL4 MOISTURE 2
21 – OVERTEMP 1 TEST BUTTON
22 – OVERTEMP 2 TEST BUTTON
23 – MOISTURE 1 TEST BUTTON
24 – MOISTURE 2 TEST BUTTON
25 – ASB ALARM SILENCE BUTTON
26 – FLOAT TERMINAL STRIP
27 – PUMP 1 POWER TERMINAL BLOCK
28 – PUMP 2 POWER TERMINAL BLOCK
29 – (2) JUNCTION BOXES
30 – TSC TERMINAL STRIP C
31 – AL ALARM LIGHT (AC)
32 – ALARM HORN (AC)
33 – SPD SURGE PROTECTION DEVICE

QTY.	MOTOR STARTER	POLE	VOLTS	DESCRIPTION
2	SIZE 1	3	460	(10 HP) SUBMERSIBLE PUMP

* BREAKERS RATED 42,000 A.I.C. MINIMUM.

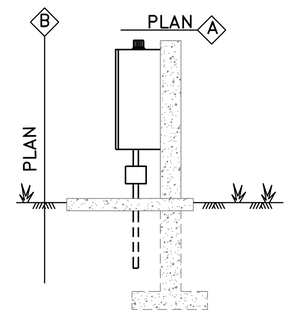

PANEL BOX ELEVATION

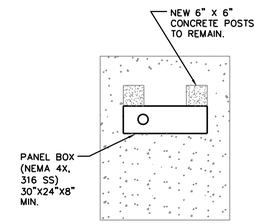

PLAN A

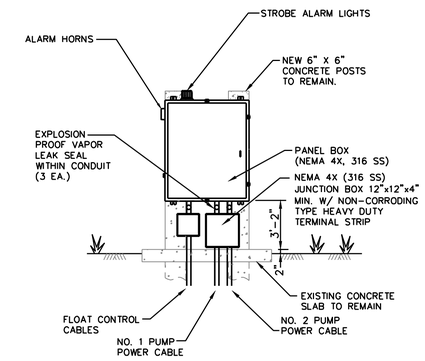

PLAN B

ELECTRICAL PLAN GENERAL NOTES:

1. ALL ELECTRICAL WIRING SHALL BE COPPER. NO SPLICES IN WET WELL.
2. A REMOVABLE GAS SEAL SHALL BE INSTALLED IN WIRING CONDUIT AT WET WELL, AND TERMINAL STRIP JUNCTION BOX. CONDUIT FROM JUNCTION BOX TO CONTROL PANEL SHALL BE COMPLETELY SEALED.
3. ALL WIRING SIZES AND EQUIPMENT SHALL BE IN ACCORDANCE WITH N.E.C. AND MANUFACTURERS RECOMMENDATIONS.
4. PHASE MONITOR REQUIRED IN CONTROL CIRCUIT. SIEMENS NO. 47TA32G (480V).
5. DUPLEXOR SHALL BE AN T.T.I. 6012.
6. ALL PANELS SHALL BE LOCKABLE WITH PADLOCK.
7. ALL PANELS SHALL BE NEMA 4X (316 STAINLESS STEEL).

BID DOCUMENTS

IF THIS BAR DOES NOT MEASURE 1" THEN DRAWING HAS BEEN REDUCED SCALE ACCORDINGLY

CARASTRO & ASSOCIATES, INC.
CONSULTING ENGINEERS EB-0001160
2609 W. DE LEON STREET TAMPA, FLORIDA 33609
TELEPHONE: (813) 874-9494 FAX: (813) 874-9794

King ENGINEERING ASSOCIATES, INC.
4921 Memorial Highway
One Memorial Center, Suite 300
Tampa, Florida 33634
Phone 813 880-8881
Fax 813 880-8882
www.kingengineering.com
Engineering License #2610

ELECTRICAL ENGINEER: PAUL S. CARASTRO, PE# 45830

RECORD DRAWINGS
SURVEYED BY: DRAWN BY:
REVIEWED BY: PROJECT ENGINEER DATE
APPROVED BY: CITY ENGINEER MICHAEL D. QUILLEN, P.E. # 33721 DATE

REVISION	BY	DATE

CITY OF CLEARWATER, FLORIDA
ENGINEERING DEPARTMENT
100 S. MYRTLE AVE.
CLEARWATER, FL 33756

INVESTIGATE BEFORE YOU EXCAVATE
CALL 811
SUNSHINE STATE ONE CALL OF FLORIDA
www.callsunshine.com
(800) 432-4770
MIN. 48 HOURS BEFORE YOU EXCAVATE

NORTHEAST WRF GRIT REMOVAL, MOVING BELT FILTER AND EQUALIZATION SYSTEM IMPROVEMENTS

IN-PLANT PUMP STATION CONTROL PANEL LAYOUT

DWG NAME: 6030-E7.1.dwg	FIELD BOOK:	SURVEYED BY:	SCALE: VERT. N/A
CONTRACT NO.: 15-0045-UT	DATE DRAWN: JULY 2019	DRAWN BY: RFB	HORIZ. AS SHOWN
JOB NO.: 2110-210-002	DESIGNED BY: RFB	CHECKED BY: PSC	SHEET NO.: ## of ##

APPROVED FOR CONSTRUCTION
CITY ENGINEER MICHAEL D. QUILLEN, P.E. # 33721 DATE

© COPYRIGHT 2010 KING ENGINEERING ASSOCIATES, INC. DRAWINGS AND CONCEPTS MAY NOT BE USED OR REPRODUCED WITHOUT WRITTEN PERMISSION CONSENT IS HEREBY GRANTED SPECIFICALLY TO GOVERNMENTAL AGENCIES TO REPRODUCE THIS DOCUMENT IN COMPLIANCE WITH F.S. CHAPTER 119.

P:\-6099\6030\elec\6030-E7.2.dwg, August 21, 2019 1:57 PM, RICHARD BARBEITO

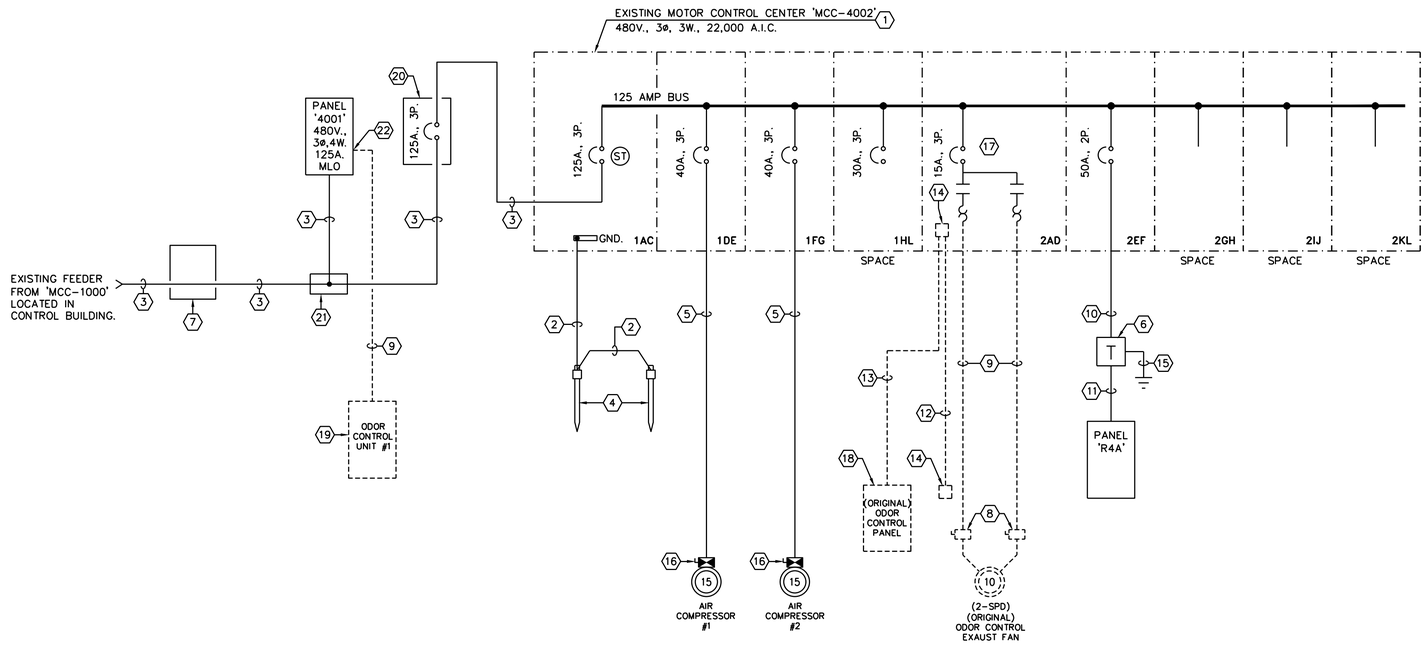

POWER ONE-LINE DIAGRAM – EXISTING 'MCC-4002'

NOT TO SCALE

LOAD SUMMARY

LOAD DESCRIPTION	KVA
'MCC-4002'	
ODOR CONTROL UNIT (REMOVED)	(11.14)
TOTAL (REMOVED)	(11.14)
PANEL '4001'	
ODOR CONTROL UNIT #1 (REMOVED)	(6.05)
TOTAL (REMOVED)	(6.05)

DRAWING NOTES:

1. EXISTING MOTOR CONTROL CENTER.
2. EXISTING NO. 6 AWG GROUNDING CONDUCTOR.
3. EXISTING 3 NO. 1/0 AND 1 NO. 4 E.G. – 1 1/2"C.
4. EXISTING GROUND RODS.
5. EXISTING 3 NO. 8 AND 1 NO. 10 E.G. – 3/4"C.
6. EXISTING 15 KVA, 480–120/240V., 1ø, 3W. TRANSFORMER.
7. EXISTING MANHOLE 'MH–1'.
8. EXISTING 30A., 3P., DISCONNECT SWITCH TO BE REMOVED.
9. EXISTING 3 NO. 12 AND 1 NO. 12 E.G. – 3/4"C. TO BE REMOVED.
10. EXISTING 2 NO. 6 AND 1 NO. 10 G.C. – 1"C.
11. EXISTING 3 NO. 4 AND 1 NO. 6 E.G. – 1"C.
12. EXISTING 6 NO. 12 – 3/4"C. TO BE REMOVED.
13. EXISTING 4 NO. 12 – 3/4"C. TO BE REMOVED.
14. EXISTING SELECTOR SWITCH TO BE REMOVED.
15. EXISTING GROUNDING CONDUCTOR.
16. EXISTING COMBINATION MOTOR STARTERS TO BE REMOVED.
17. EXISTING CIRCUIT BREAKER AND MOTORS TO REMAIN. MCC BUCKET TO BE RELABELED AS "SPARE".
18. EXISTING (ORIGINAL) ODOR CONTROL PANEL TO BE REMOVED.
19. EXISTING ODOR CONTROL UNIT AND CONTROL PANEL TO BE REMOVED.
20. EXISTING 125A., 3P., ENCLOSED CIRCUIT BREAKER (ECB).
21. EXISTING WIRE GUTTER.
22. EXISTING 20A. 3–POLE CIRCUIT BREAKER TO REMAIN AND TO BE RELABELED AS "SPARE".

LINE LEGEND

————	(LIGHT) EXISTING TO REMAIN
- - - - - -	(DASHED) TO BE REMOVED

BID DOCUMENTS

IF THIS BAR DOES NOT MEASURE 1" THEN DRAWING HAS BEEN REDUCED SCALE ACCORDINGLY (0 – 1")

CARASTRO & ASSOCIATES, INC.
CONSULTING ENGINEERS EB–0001160
2609 W. DE LEON STREET TAMPA, FLORIDA 33609
TELEPHONE: (813) 874–9494 FAX: (813) 874–9794

King ENGINEERING ASSOCIATES, INC.
4921 Memorial Highway
One Memorial Center, Suite 300
Tampa, Florida 33634
Phone 813 880-8881
Fax 813 880-8882
www.kingengineering.com
Engineering License #2610

ELECTRICAL ENGINEER: PAUL S. CARASTRO, PE# 45830

RECORD DRAWINGS

SURVEYED BY: DRAWN BY:
REVIEWED BY: PROJECT ENGINEER DATE
APPROVED BY: CITY ENGINEER MICHAEL D. QUILLEN, P.E. # 33721 DATE

REVISION	BY	DATE

CITY OF CLEARWATER, FLORIDA
ENGINEERING DEPARTMENT
100 S. MYRTLE AVE.
CLEARWATER, FL 33756

INVESTIGATE BEFORE YOU EXCAVATE
CALL 811
SUNSHINE STATE ONE CALL OF FLORIDA
www.callsunshine.com
(800) 432–4770
MIN. 48 HOURS BEFORE YOU EXCAVATE

NORTHEAST WRF GRIT REMOVAL, MOVING BELT FILTER AND EQUALIZATION SYSTEM IMPROVEMENTS

POWER ONE-LINE DIAGRAM - EXISTING 'MCC-4002'

DWG NAME: 6030–E3.0.DWG	FIELD BOOK:	SURVEYED BY:	SCALE: VERT. N/A
CONTRACT NO.: 15–0045–UT	DATE DRAWN: JULY 2019	DRAWN BY: RFB	HORIZ. AS SHOWN
JOB NO.: 2110–210–002	DESIGNED BY: RFB	CHECKED BY: PSC	SHEET NO.: ## of ##

APPROVED FOR CONSTRUCTION
CITY ENGINEER MICHAEL D. QUILLEN, P.E. # 33721 DATE

© COPYRIGHT 2010 KING ENGINEERING ASSOCIATES, INC. DRAWINGS AND CONCEPTS MAY NOT BE USED OR REPRODUCED WITHOUT WRITTEN PERMISSION CONSENT IS HEREBY GRANTED SPECIFICALLY TO GOVERNMENTAL AGENCIES TO REPRODUCE THIS DOCUMENT IN COMPLIANCE WITH F.S. CHAPTER 119.

P:\-6099\6030\elec\6030-E8.0.dwg, August 21, 2019 1:57 PM, RICHARD BARBEITO

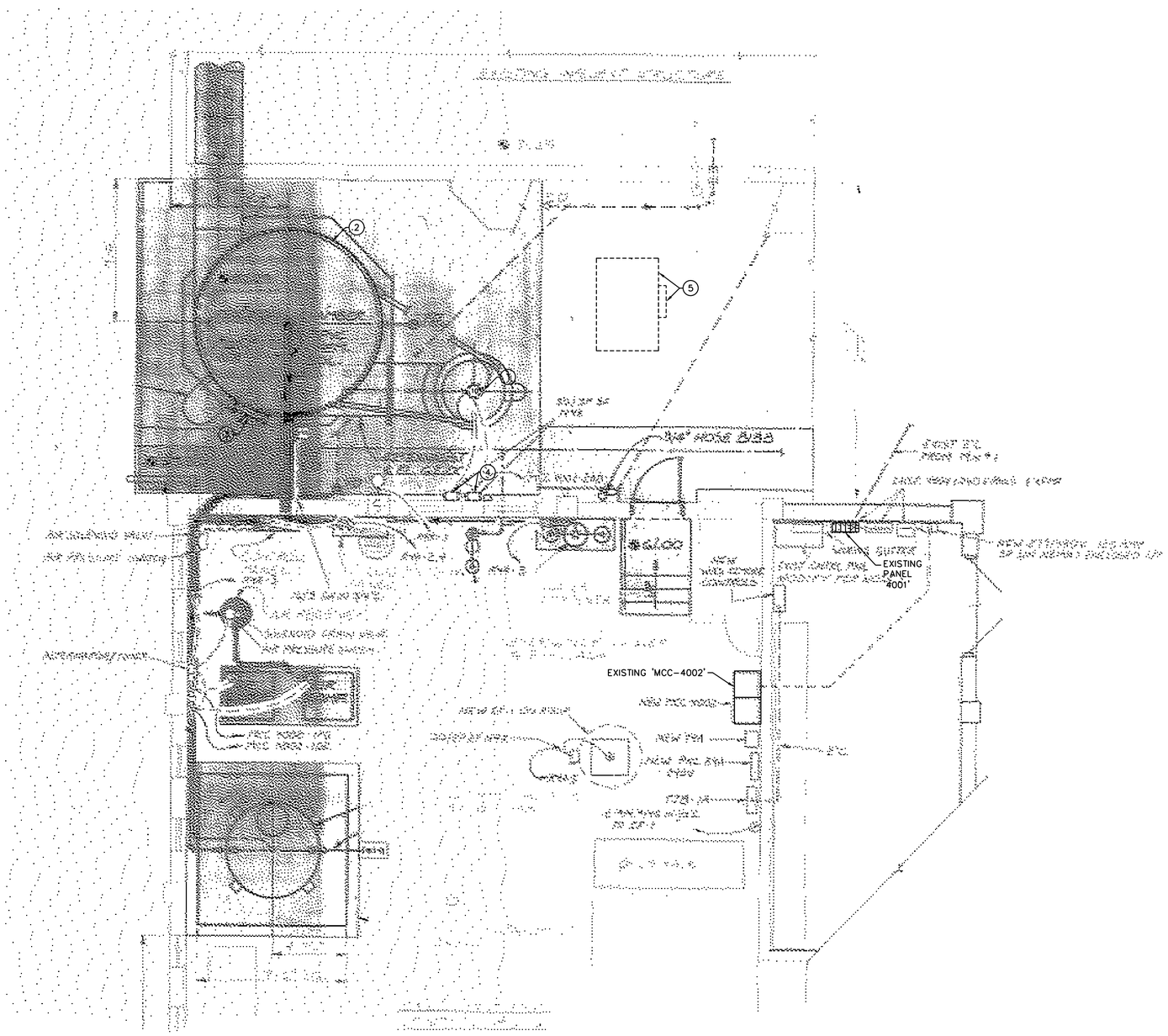

SLUDGE THICKENING PLAN – ELECTRICAL DEMOLITION

GENERAL NOTES:

1. THIS DRAWING IS NOT TO SCALE. CONTRACTOR TO FIELD MEASURE ALL DISTANCES/DIMENSIONS BEFORE NEW INSTALLATION IS EXECUTED.
2. REFER TO DRAWING E0.0 FOR GENERAL DEMOLITION NOTES.

DRAWING NOTES:

1. EXISTING (ORIGINAL) ODOR CONTROL EXHAUST FAN TO BE REMOVED.
2. EXISTING REACTION CHAMBER TO BE REMOVED.
3. EXISTING (ORIGINAL) ODOR CONTROL PANEL TO BE REMOVED.
4. EXISTING DISCONNECT SWITCHES TO BE REMOVED.
5. EXISTING ODOR CONTROL UNIT #1 AND CONTROL PANEL TO BE REMOVED.

BID DOCUMENTS

IF THIS BAR DOES NOT MEASURE 1" THEN DRAWING HAS BEEN REDUCED. SCALE ACCORDINGLY 0 1"

CARASTRO & ASSOCIATES, INC.
CONSULTING ENGINEERS EB-0001160
2609 W. DE LEON STREET TAMPA, FLORIDA 33609
TELEPHONE: (813) 874-9494 FAX: (813) 874-9794

King ENGINEERING ASSOCIATES, INC.
4921 Memorial Highway
One Memorial Center, Suite 300
Tampa, Florida 33634
Phone 813 880-8881
Fax 813 880-8882
www.kingengineering.com
Engineering License #2610

ELECTRICAL ENGINEER: PAUL S. CARASTRO, PE# 45830

© COPYRIGHT 2010 KING ENGINEERING ASSOCIATES, INC. DRAWINGS AND CONCEPTS MAY NOT BE USED OR REPRODUCED WITHOUT WRITTEN PERMISSION CONSENT IS HEREBY GRANTED SPECIFICALLY TO GOVERNMENTAL AGENCIES TO REPRODUCE THIS DOCUMENT IN COMPLIANCE WITH F.S. CHAPTER 119.

RECORD DRAWINGS

SURVEYED BY: DRAWN BY:
REVIEWED BY:
PROJECT ENGINEER DATE
APPROVED BY:
CITY ENGINEER MICHAEL D. QUILLEN, P.E. # 33721 DATE

REVISION	BY	DATE

CITY OF CLEARWATER, FLORIDA
ENGINEERING DEPARTMENT
100 S. MYRTLE AVE.
CLEARWATER, FL 33756

INVESTIGATE BEFORE YOU EXCAVATE
CALL 811
SUNSHINE STATE ONE CALL OF FLORIDA
www.callsunshine.com
(800) 432-4770
MIN. 48 HOURS BEFORE YOU EXCAVATE

NORTHEAST WRF GRIT REMOVAL, MOVING BELT FILTER AND EQUALIZATION SYSTEM IMPROVEMENTS

SLUDGE THICKENING PLAN - ELECTRICAL DEMOLITION

DWG NAME: 6030-E2.1.dwg	FIELD BOOK:	SURVEYED BY:	SCALE: VERT. N/A
CONTRACT NO.: 15-0045-UT	DATE DRAWN: JULY 2019	DRAWN BY: RFB	HORIZ. AS SHOWN
JOB NO.: 2110-210-002	DESIGNED BY: RFB	CHECKED BY: PSC	SHEET NO.: ## of ##

APPROVED FOR CONSTRUCTION
CITY ENGINEER MICHAEL D. QUILLEN, P.E. # 33721 DATE

P:\-6099\6030\elec\6030-E8.1.dwg, August 21, 2019 1:58 PM, RICHARD BARBEITO

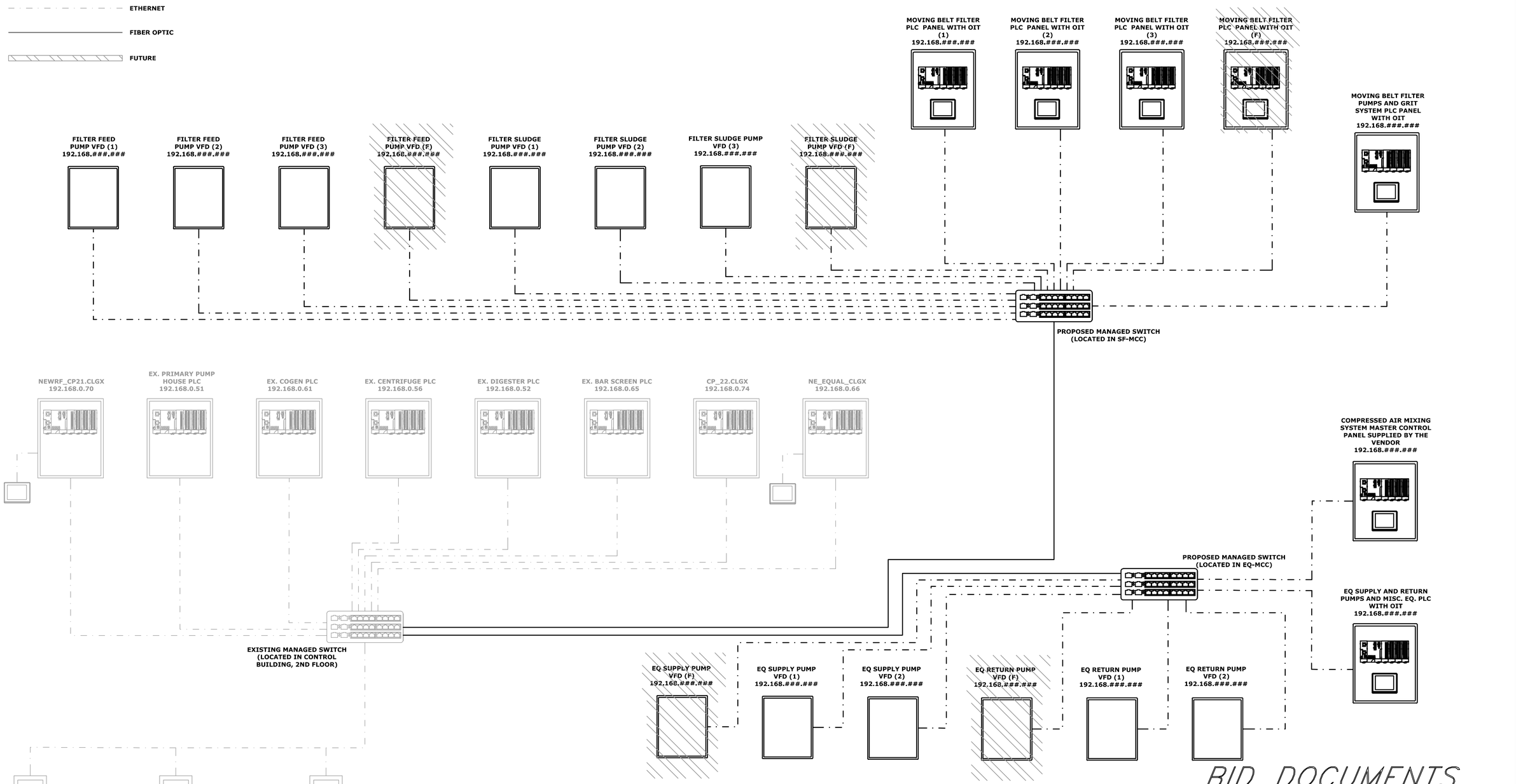

BID DOCUMENTS

IF THIS BAR DOES NOT MEASURE 1" THEN DRAWING HAS BEEN REDUCED SCALE ACCORDINGLY

0 1"

King
ENGINEERING ASSOCIATES, INC.
4921 Memorial Highway
One Memorial Center, Suite 300
Tampa, Florida 33634
Phone 813 880-8881
Fax 813 880-8882
www.kingengineering.com
Engineering License #2610

© COPYRIGHT 2010 KING ENGINEERING ASSOCIATES, INC. DRAWINGS AND CONCEPTS MAY NOT BE USED OR REPRODUCED WITHOUT WRITTEN PERMISSION CONSENT IS HEREBY GRANTED SPECIFICALLY TO GOVERNMENTAL AGENCIES TO REPRODUCE THIS DOCUMENT IN COMPLIANCE WITH F.S. CHAPTER 119.

RECORD DRAWINGS

SURVEYED BY: DRAWN BY:

REVIEWED BY: PROJECT ENGINEER DATE

APPROVED BY: ENGINEER DATE

REVISION	BY	DATE

CITY OF CLEARWATER, FLORIDA
ENGINEERING DEPARTMENT
100 S. MYRTLE AVE.
CLEARWATER, FL 33756

INVESTIGATE BEFORE YOU EXCAVATE
CALL 811
SUNSHINE STATE ONE CALL OF FLORIDA
www.callsunshine.com
(800) 432-4770
MIN. 48 HOURS BEFORE YOU EXCAVATE

NORTHEAST WRF GRIT REMOVAL, MOVING BELT FILTER AND EQUALIZATION SYSTEM IMPROVEMENTS

PLC & CONTROLS NETWORK DIAGRAM

DWG NAME: GEN-INSTR	FIELD BOOK:	SURVEYED BY:	SCALE: VERT. N/A
CONTRACT NO.: 15-0045-UT	DATE DRAWN: MARCH 2016	DRAWN BY: MJG	HORIZ. AS SHOWN
JOB NO.: 2110-210-002	DESIGNED BY: LVM	CHECKED BY: TAT	SHEET NO.: 111 of 117

APPROVED FOR CONSTRUCTION

O:\ENV_ENG\2110\210\002\production\Drawings\GEN-INSTR.dwg, March 18, 2020 2:57 PM, King Engineering Associate Inc.

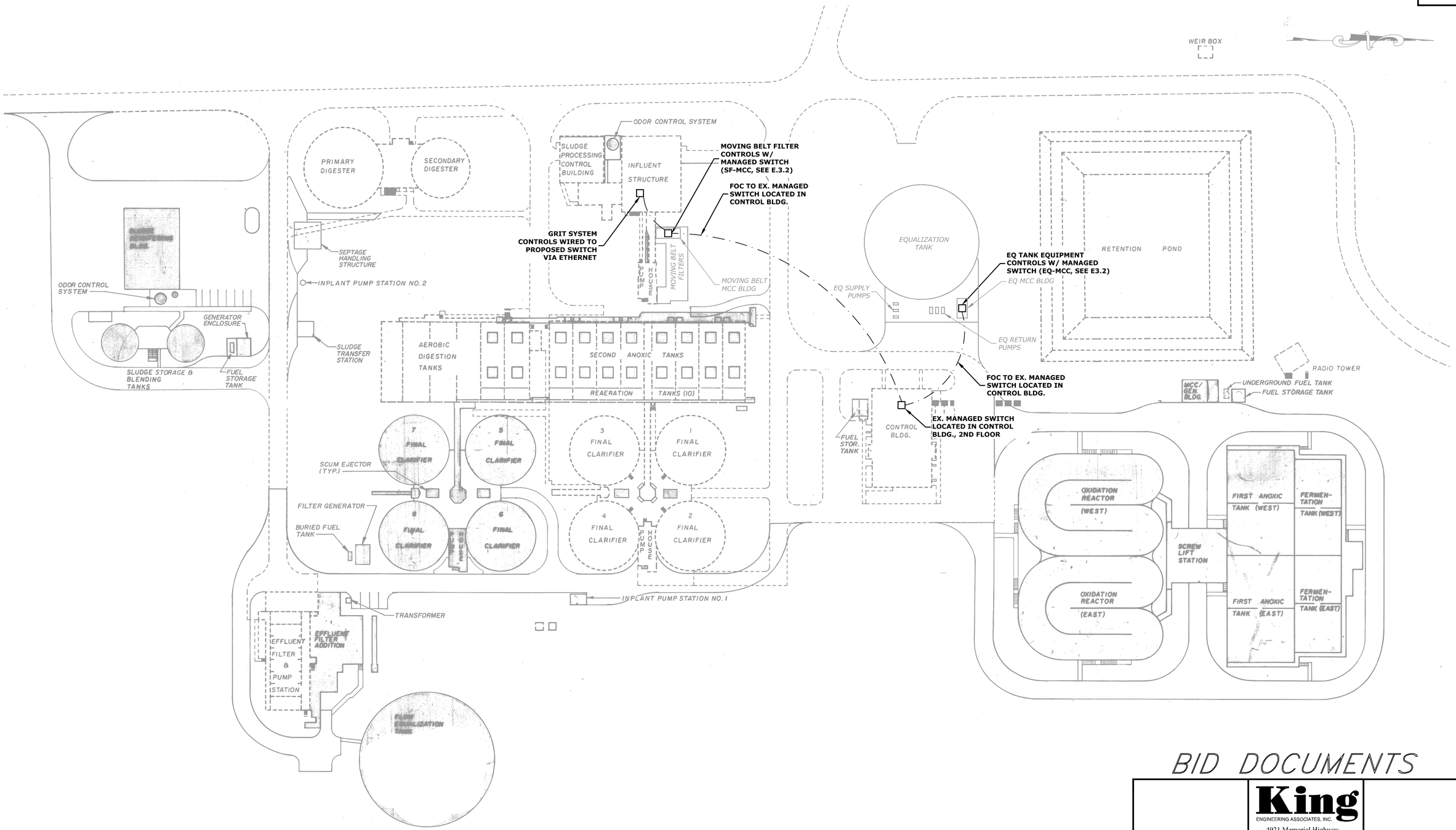

BID DOCUMENTS

IF THIS BAR DOES NOT MEASURE 1" THEN DRAWING HAS BEEN REDUCED SCALE ACCORDINGLY 0 1"

King
ENGINEERING ASSOCIATES, INC.
4921 Memorial Highway
One Memorial Center, Suite 300
Tampa, Florida 33634
Phone 813 880-8881
Fax 813 880-8882
www.kingengineering.com
Engineering License #2610

RECORD DRAWINGS
SURVEYED BY: DRAWN BY:
REVIEWED BY: PROJECT ENGINEER DATE
APPROVED BY: ENGINEER DATE

REVISION	BY	DATE

CITY OF CLEARWATER, FLORIDA
ENGINEERING DEPARTMENT
100 S. MYRTLE AVE.
CLEARWATER, FL 33756

INVESTIGATE BEFORE YOU EXCAVATE
CALL 811
SUNSHINE STATE ONE CALL OF FLORIDA
www.callsunshine.com
(800) 432-4770
MIN. 48 HOURS BEFORE YOU EXCAVATE

NORTHEAST WRF GRIT REMOVAL, MOVING BELT FILTER AND EQUALIZATION SYSTEM IMPROVEMENTS

INSTRUMENTATION SITE PLAN

DWG NAME: GEN-INSTR	FIELD BOOK:	SURVEYED BY:	SCALE: VERT. N/A
CONTRACT NO.: 15-0045-UT	DATE DRAWN: MARCH 2016	DRAWN BY: MJG	HORIZ. AS SHOWN
JOB NO.: 2110-210-002	DESIGNED BY: LVM	CHECKED BY: TAT	SHEET NO.: 112 of 117

APPROVED FOR CONSTRUCTION

© COPYRIGHT 2010 KING ENGINEERING ASSOCIATES, INC. DRAWINGS AND CONCEPTS MAY NOT BE USED OR REPRODUCED WITHOUT WRITTEN PERMISSION CONSENT IS HEREBY GRANTED SPECIFICALLY TO GOVERNMENTAL AGENCIES TO REPRODUCE THIS DOCUMENT IN COMPLIANCE WITH F.S. CHAPTER 119.

O:\ENV_ENG\2110\210\002\production\Drawings\GEN-INSTR.dwg, March 18, 2020 2:58 PM, King Engineering Associate Inc.

FUNCTION SYMBOL SCHEDULE

	FIRST LETTER		SUCCEEDING-LETTERS		
	MEASURED OR INITIATING VARIABLE	MODIFIER	READOUT OR PASSIVE FUNCTION	OUTPUT FUNCTION	MODIFIER
A	Analysis		Alarm		
B	Burner, Combustion		Programmer		
C	Conductivity (Electrical)			Control,	Closed
D	Density or Specific Gravity	Differential			
E	Voltage		Sensor (Primary Element)	Eduction	
F	Flow Rate	Ratio (Fraction)			
G	Gaging		Glass, Viewing Device		
H	Hand				High
I	Current (Electrical)		Indicate		
J	Power	Scan			
K	Time, Time Schedule			Control Station	
L	Level		Light (Pilot)		Low
M	Motor				Middle, Intermediate
N	Vibration	Igniter			
O	Operation	Offset	Orifice, Restriction		Open
P	Pressure, Vacuum		Point (Test) Connection		
Q	Quantity, Event	Integrate, Totalize	Integrate		
R	Radiation		Record, Print	Regulate	
S	Speed, Frequency	Safety		Switch	
T	Temperature			Transmit	
U	Multivariable	Trend	Multifunction	Multifunction	Multifunction
V	Viscosity	Vacuum		Valve, Damper, Louver, Gate	
W	Weight, Force, Torque		Well		
X	Unclassified		Unclassified	Unclassified	Unclassified
Y				Relay, Compute, Convert	
Z	Position			Final Control Element	Drive, Actuator, Unclassified Final Control Element

BASIC SYMBOLS

SINGLE FUNCTION — MULTIPLE FUNCTION

- OR — FIELD MOUNTED INSTRUMENT OR DEVICE
- OR — FRONT OF PANEL MOUNTED INSTRUMENT ON LCP MCC, OR VFD
- OR — FRONT OF PANEL MOUNTED INSTRUMENT
- OR — PLC AND/OR SCADA HMI CONTROL COMPONENT (OPERATOR ACCESSIBLE UNDER NORMAL CONDITIONS)
- PID — PROPORTIONAL INTEGRAL DERIVATIVE CONTROLLER

LINE CODES

- ELECTRICAL SIGNAL
- PROCESS OR MECH.
- LINE OR EQUIPMENT
- HARD WIRED INTERLOCK
- MATCHLINE
- SHEET — PROCESS LINE OR ELECTRICAL SIGNAL CONTINUATION TO/FROM SHEET NUMBER INDICATED
- CONTINUATION ON SAME SHEET
- CONTINUATION ON FACILITIES NOT SHOWN ON DRAWINGS
- ANALOG INPUT (AI)
- ANALOG OUTPUT (AO)
- DIGITAL INPUT (DI)
- DIGITAL OUTPUT (DO)

INSTRUMENT TAG NOTATION

FIC 101

- INSTRUMENT NUMBER
- ISA INSTRUMENT FUNCTION

VALVES, PUMPS & METERS

- WYE STRAINER
- GATE VALVE
- NEEDLE VALVE
- BUTTERFLY VALVE
- BALL OR ROTARY
- BALL CHECK VALVE
- GLOBE VALVE
- PLUG VALVE
- DIAPHRAGM VALVE
- CHECK VALVE
- DIAPHRAGM CHECK VALVE
- CONTROL VALVE POSITIONER
- PRESSURE REGULATING VALVE
- BACK PRESSURE REGULATING VALVE
- PISTON OPERATED
- S=SOLENOID OPERATED M=MOTOR OPERATED
- DRAIN
- Y=WEIR GATE T=SLIDE SLUICE GATE I =STOP LOG
- BLIND FLANGE
- PULSATION DAMPENER
- PRESSURE RELIEF OR SAFETY
- 3-WAY
- 4-WAY
- TELESCOPING
- REDUCER
- HOSE CONNECTION
- AIR RELEASE VALVE
- UNION
- FS — FLOW SWITCH
- QUICK CONNECT
- 3-WAY PRESSURE RELIEF VALVE
- SUBMERSIBLE PUMP
- MAG — MAGNETIC METER
- M — PROGRESSING CAVITY PUMP
- CENTRIFUGAL PUMP
- ROTARY LOBE PUMP
- POSITIVE DISPLACEMENT PUMP
- M — DIAPHRAGM PUMP
- METERING PUMP
- PRESSURE VESSELS
- PRESSURE EXCHANGER
- STATIC MIXER
- M — CONSTANT SPEED MOTOR
- M — VARIABLE SPEED DRIVE
- FLOAT LEVEL SWITCH
- PI — PRESSURE GUAGE
- AE — GENERAL ANALYZER
- FE, M — GENERAL FLOW METER
- VENT TO ATMOSPHERE
- METERING PUMP CALIBRATION COLUMN

MISCELLANEOUS SYMBOLS

- P — **PURGE CONNECTION**
- S — **SAMPLE POINT**
- I — **INTERLOCK**

EQUIPMENT NOTATION

T	TANK OR SUMP
P	PUMP
B	BLOWER OR FAN
K	COMPRESSOR
MX	MIXER
ME	MECHANICAL EQUIPMENT
SP	SAMPLE PUMP

VALVE DESIGNATIONS

HV	HAND VALVE
FCV	FLOW CONTROL VALVE
PCV	PRESSURE CONTROL VALVE
LCV	LEVEL CONTROL VALVE
FV	FLOW VALVE
CV	CHECK VALVE

HAND SWITCH NOTATION

HOA	HAND-OFF-AUTO
S/S	START/STOP
SEL	SELECTOR
O/C	OPEN/CLOSE
D/S	DUTY/STANDBY
LOR	LOCAL-OFF-REMOTE
HOR	HAND-OFF-REMOTE

MISCELLANEOUS NOTATIONS

MCC	MOTOR CONTROL CENTER
VFD	VARIABLE FREQUENCY DRIVE
LCP	LOCAL CONTROL PANEL
AI	ANALOG INPUT
AO	ANALOG OUTPUT
DI	DIGITAL INPUT
DO	DIGITAL OUTPUT
HM	HUMAN INTERFACE MACHINE
SCADA	SUPERVISORY CONTROL AND DATA ACQUISITION
OIT	OPERATOR INTERFACE TERMINAL
NC	NORMALLY CLOSED
NO	NORMALLY OPEN
PLC	PROGRAMMABLE LOGIC CONTROLLER
UPS	UNINTERRUPTIBLE POWER SUPPLY
KVM	KEYBOARD-VIDEO-MOUSE
FOC	FIBER OPTIC CABLE
FET	FLOW EQUALIZATION TANK

© COPYRIGHT 2010 KING ENGINEERING ASSOCIATES, INC. DRAWINGS AND CONCEPTS MAY NOT BE USED OR REPRODUCED WITHOUT WRITTEN PERMISSION. CONSENT IS HEREBY GRANTED SPECIFICALLY TO GOVERNMENTAL AGENCIES TO REPRODUCE THIS DOCUMENT IN COMPLIANCE WITH F.S. CHAPTER 119.

BID DOCUMENTS

King
ENGINEERING ASSOCIATES, INC.
4921 Memorial Highway
One Memorial Center, Suite 300
Tampa, Florida 33634
Phone 813 880-8881
Fax 813 880-8882
www.kingengineering.com
Engineering License #2610

IF THIS BAR DOES NOT MEASURE 1" THEN DRAWING HAS BEEN REDUCED SCALE ACCORDINGLY 0 1"

RECORD DRAWINGS
SURVEYED BY: DRAWN BY:
REVIEWED BY: PROJECT ENGINEER DATE
APPROVED BY: ENGINEER DATE

REVISION	BY	DATE

CITY OF CLEARWATER, FLORIDA
ENGINEERING DEPARTMENT
100 S. MYRTLE AVE.
CLEARWATER, FL 33756

INVESTIGATE BEFORE YOU EXCAVATE
CALL 811
SUNSHINE STATE ONE CALL OF FLORIDA
www.callsunshine.com
(800) 432-4770
MIN. 48 HOURS BEFORE YOU EXCAVATE

NORTHEAST WRF GRIT REMOVAL, MOVING BELT FILTER AND EQUALIZATION SYSTEM IMPROVEMENTS

PROCESS & INSTRUMENTATION ABBREVIATIONS AND LEGENDS

DWG NAME: GEN-INSTR	FIELD BOOK:	SURVEYED BY:	SCALE: VERT. N/A
CONTRACT NO.: 15-0045-UT	DATE DRAWN: MARCH 2016	DRAWN BY: MJG	HORIZ. AS SHOWN
JOB NO.: 2110-210-002	DESIGNED BY: LVM	CHECKED BY: TAT	SHEET NO.: 113 of 117

APPROVED FOR CONSTRUCTION

O:\ENV_ENG\2110\210\002\production\Drawings\GEN-INSTR.dwg, March 18, 2020 2:58 PM, King Engineering Associate Inc.

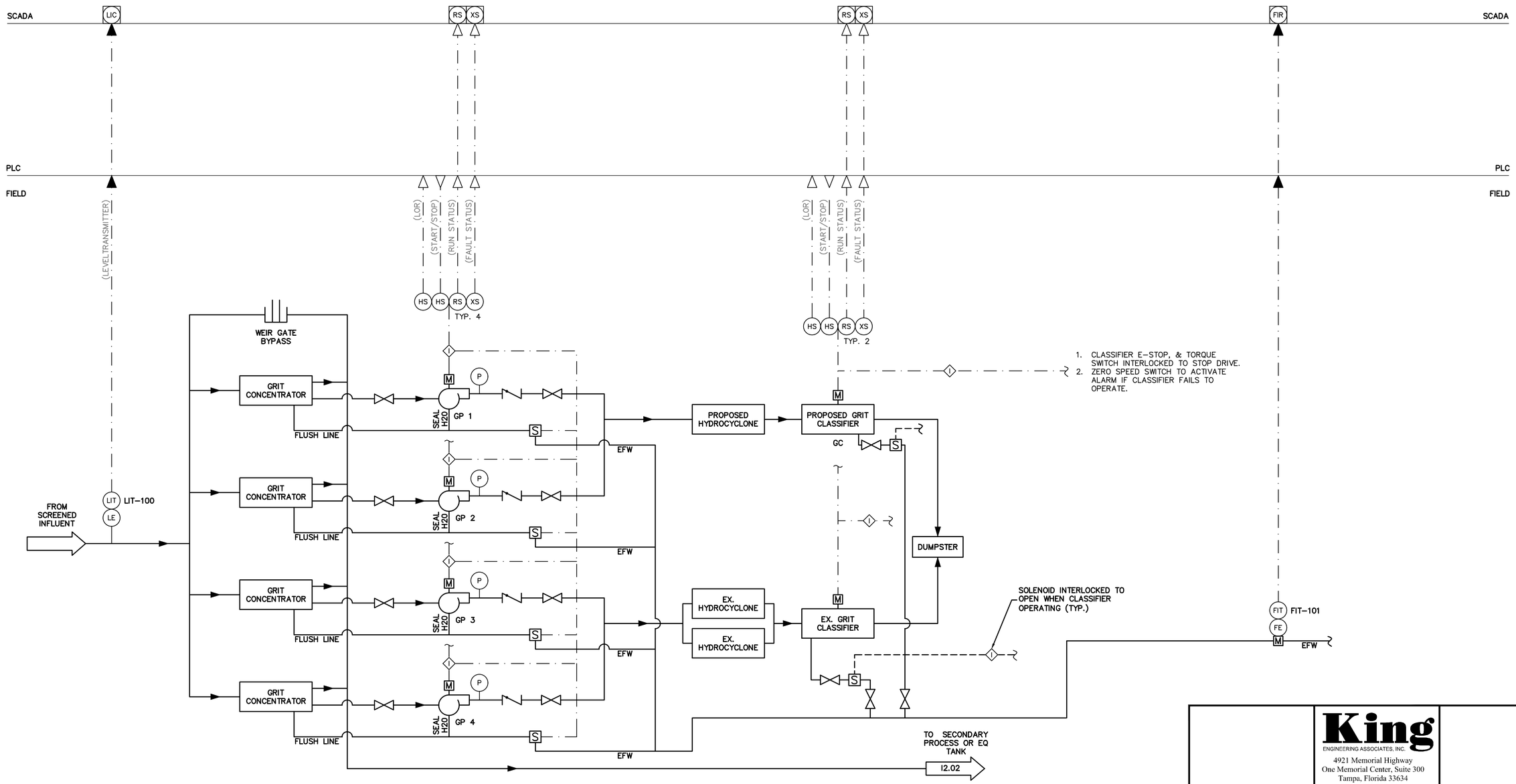

BID DOCUMENTS

IF THIS BAR DOES NOT MEASURE 1" THEN DRAWING HAS BEEN REDUCED SCALE ACCORDINGLY

King
ENGINEERING ASSOCIATES, INC.
4921 Memorial Highway
One Memorial Center, Suite 300
Tampa, Florida 33634
Phone 813 880-8881
Fax 813 880-8882
www.kingengineering.com
Engineering License #2610

RECORD DRAWINGS			
SURVEYED BY:	DRAWN BY:		
REVIEWED BY:			
PROJECT ENGINEER	DATE		
APPROVED BY:			
ENGINEER	DATE	REVISION	BY / DATE

CITY OF CLEARWATER, FLORIDA
ENGINEERING DEPARTMENT
100 S. MYRTLE AVE.
CLEARWATER, FL 33756

INVESTIGATE BEFORE YOU EXCAVATE
CALL 811
SUNSHINE STATE ONE CALL OF FLORIDA
www.callsunshine.com
(800) 432-4770
MIN. 48 HOURS BEFORE YOU EXCAVATE

NORTHEAST WRF GRIT REMOVAL, MOVING BELT FILTER AND EQUALIZATION SYSTEM IMPROVEMENTS

GRIT REMOVAL SYSTEM PROCESS AND INSTRUMENTATION DIAGRAM

DWG NAME: GEN-INSTR	FIELD BOOK:	SURVEYED BY:	SCALE: VERT. N/A
CONTRACT NO.: 15-0045-UT	DATE DRAWN: MARCH 2016	DRAWN BY: MJG	HORIZ. AS SHOWN
JOB NO.: 2110-210-002	DESIGNED BY: LVM	CHECKED BY: TAT	SHEET NO.: 114 of 117
APPROVED FOR CONSTRUCTION			

© COPYRIGHT 2010 KING ENGINEERING ASSOCIATES, INC. DRAWINGS AND CONCEPTS MAY NOT BE USED OR REPRODUCED WITHOUT WRITTEN PERMISSION CONSENT IS HEREBY GRANTED SPECIFICALLY TO GOVERNMENTAL AGENCIES TO REPRODUCE THIS DOCUMENT IN COMPLIANCE WITH F.S. CHAPTER 119.

O:\ENV_ENG\2110\210\002\production\Drawings\GEN-INSTR.dwg, March 18, 2020 2:58 PM, King Engineering Associate Inc.

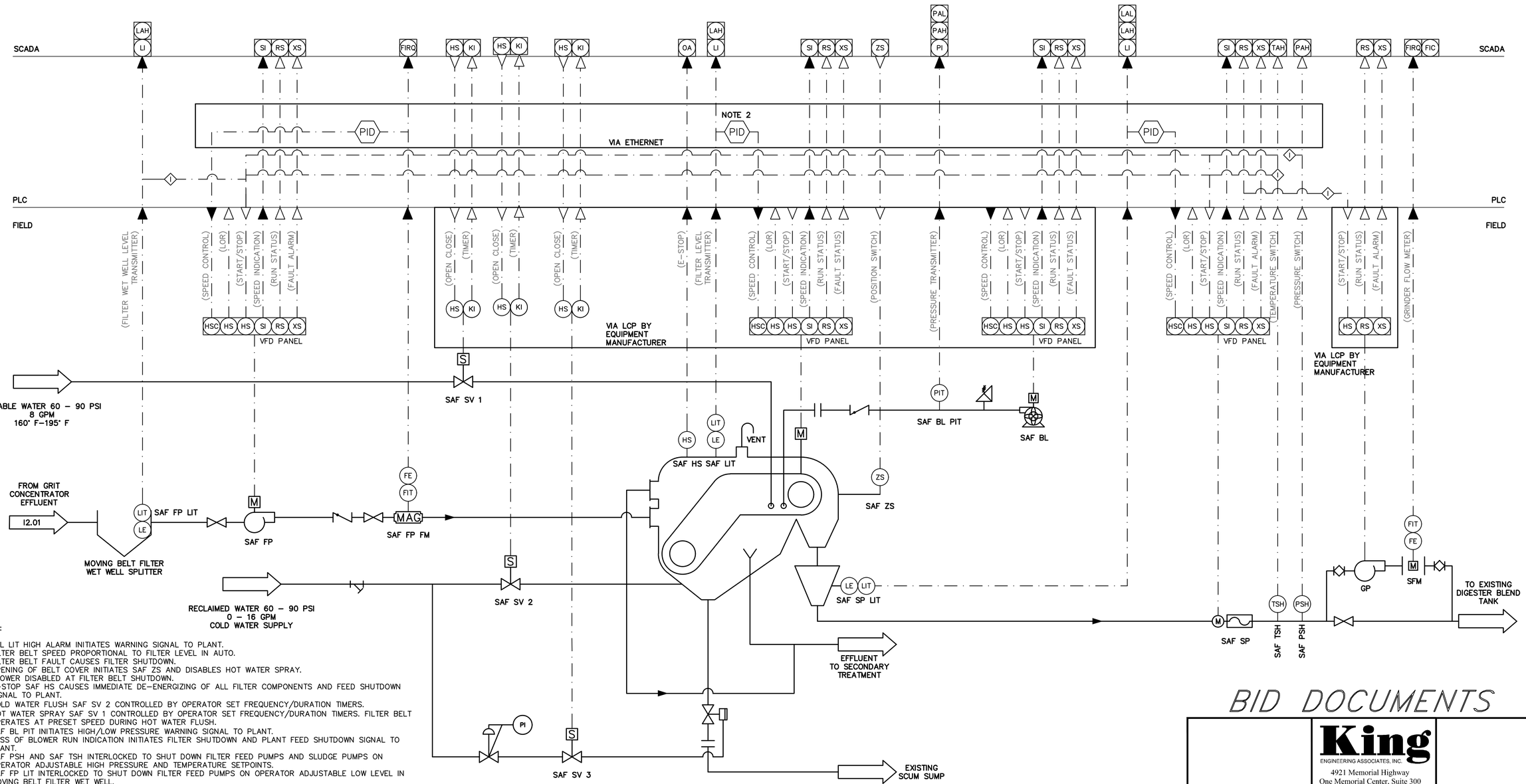

NOTES:

1. ALL LIT HIGH ALARM INITIATES WARNING SIGNAL TO PLANT.
2. FILTER BELT SPEED PROPORTIONAL TO FILTER LEVEL IN AUTO.
3. FILTER BELT FAULT CAUSES FILTER SHUTDOWN.
4. OPENING OF BELT COVER INITIATES SAF ZS AND DISABLES HOT WATER SPRAY.
5. BLOWER DISABLED AT FILTER BELT SHUTDOWN.
6. E–STOP SAF HS CAUSES IMMEDIATE DE–ENERGIZING OF ALL FILTER COMPONENTS AND FEED SHUTDOWN SIGNAL TO PLANT.
7. COLD WATER FLUSH SAF SV 2 CONTROLLED BY OPERATOR SET FREQUENCY/DURATION TIMERS.
8. HOT WATER SPRAY SAF SV 1 CONTROLLED BY OPERATOR SET FREQUENCY/DURATION TIMERS. FILTER BELT OPERATES AT PRESET SPEED DURING HOT WATER FLUSH.
9. SAF BL PIT INITIATES HIGH/LOW PRESSURE WARNING SIGNAL TO PLANT.
10. LOSS OF BLOWER RUN INDICATION INITIATES FILTER SHUTDOWN AND PLANT FEED SHUTDOWN SIGNAL TO PLANT.
11. SAF PSH AND SAF TSH INTERLOCKED TO SHUT DOWN FILTER FEED PUMPS AND SLUDGE PUMPS ON OPERATOR ADJUSTABLE HIGH PRESSURE AND TEMPERATURE SETPOINTS.
12. SAF FP LIT INTERLOCKED TO SHUT DOWN FILTER FEED PUMPS ON OPERATOR ADJUSTABLE LOW LEVEL IN MOVING BELT FILTER WET WELL.
13. GRINDER PUMP GP INTERLOCKED TO START/STOP BASED ON SLUDGE PUMP SAF SP RUN STATUS

BID DOCUMENTS

IF THIS BAR DOES NOT MEASURE 1" THEN DRAWING HAS BEEN REDUCED SCALE ACCORDINGLY

King
ENGINEERING ASSOCIATES, INC.
4921 Memorial Highway
One Memorial Center, Suite 300
Tampa, Florida 33634
Phone 813 880-8881
Fax 813 880-8882
www.kingengineering.com
Engineering License #2610

RECORD DRAWINGS
SURVEYED BY: DRAWN BY:
REVIEWED BY: PROJECT ENGINEER DATE
APPROVED BY: ENGINEER DATE

REVISION	BY	DATE

CITY OF CLEARWATER, FLORIDA
ENGINEERING DEPARTMENT
100 S. MYRTLE AVE.
CLEARWATER, FL 33756

INVESTIGATE BEFORE YOU EXCAVATE
CALL 811
SUNSHINE STATE ONE CALL OF FLORIDA
www.callsunshine.com
(800) 432-4770
MIN. 48 HOURS BEFORE YOU EXCAVATE

NORTHEAST WRF GRIT REMOVAL, MOVING BELT FILTER AND EQUALIZATION SYSTEM IMPROVEMENTS

MOVING BELT FILTER SYSTEM PROCESS AND INSTRUMENTATION DIAGRAM

DWG NAME: GEN–INSTR	FIELD BOOK:	SURVEYED BY:	SCALE: VERT. N/A
CONTRACT NO.: 15–0045–UT	DATE DRAWN: MARCH 2016	DRAWN BY: MJG	HORIZ. AS SHOWN
JOB NO.: 2110–210–002	DESIGNED BY: LVM	CHECKED BY: TAT	SHEET NO.: 115 of 117
APPROVED FOR CONSTRUCTION			

© COPYRIGHT 2010 KING ENGINEERING ASSOCIATES, INC. DRAWINGS AND CONCEPTS MAY NOT BE USED OR REPRODUCED WITHOUT WRITTEN PERMISSION CONSENT IS HEREBY GRANTED SPECIFICALLY TO GOVERNMENTAL AGENCIES TO REPRODUCE THIS DOCUMENT IN COMPLIANCE WITH F.S. CHAPTER 119.

O:\ENV_ENG\2110\210\002\production\Drawings\GEN-INSTR.dwg, March 18, 2020 2:58 PM, King Engineering Associate Inc.

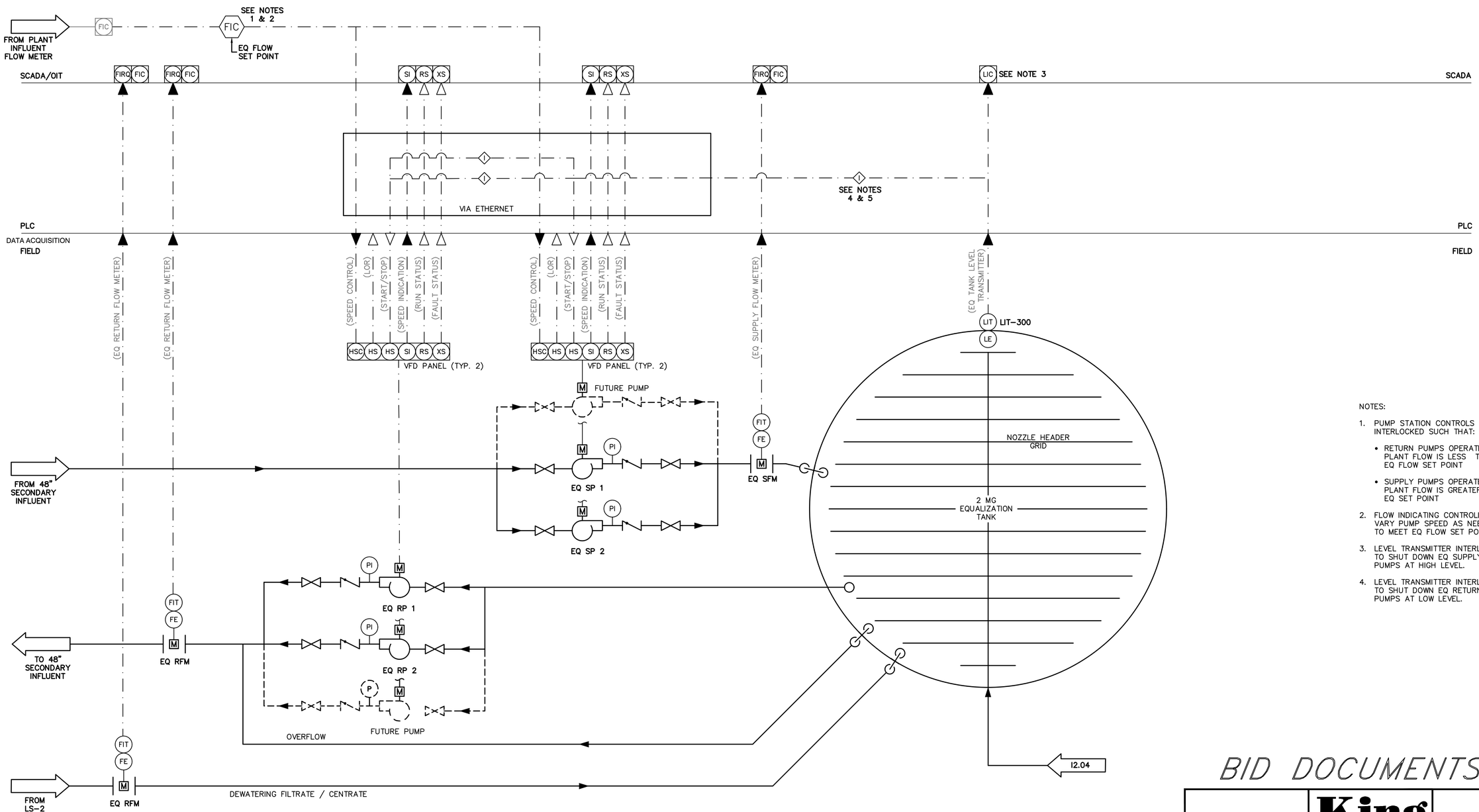

NOTES:

1. PUMP STATION CONTROLS INTERLOCKED SUCH THAT:
   - RETURN PUMPS OPERATE IF PLANT FLOW IS LESS THAN EQ FLOW SET POINT
   - SUPPLY PUMPS OPERATE IF PLANT FLOW IS GREATER THAN EQ SET POINT
2. FLOW INDICATING CONTROLLER TO VARY PUMP SPEED AS NEEDED TO MEET EQ FLOW SET POINT
3. LEVEL TRANSMITTER INTERLOCKED TO SHUT DOWN EQ SUPPLY PUMPS AT HIGH LEVEL.
4. LEVEL TRANSMITTER INTERLOCKED TO SHUT DOWN EQ RETURN PUMPS AT LOW LEVEL.

BID DOCUMENTS

IF THIS BAR DOES NOT MEASURE 1" THEN DRAWING HAS BEEN REDUCED SCALE ACCORDINGLY 0 1"

King
ENGINEERING ASSOCIATES, INC.
4921 Memorial Highway
One Memorial Center, Suite 300
Tampa, Florida 33634
Phone 813 880-8881
Fax 813 880-8882
www.kingengineering.com
Engineering License #2610

RECORD DRAWINGS
SURVEYED BY: DRAWN BY:
REVIEWED BY: PROJECT ENGINEER DATE
APPROVED BY: ENGINEER DATE

REVISION	BY	DATE

CITY OF CLEARWATER, FLORIDA
ENGINEERING DEPARTMENT
100 S. MYRTLE AVE.
CLEARWATER, FL 33756

INVESTIGATE BEFORE YOU EXCAVATE
CALL 811
SUNSHINE STATE ONE CALL OF FLORIDA
www.callsunshine.com
(800) 432-4770
MIN. 48 HOURS BEFORE YOU EXCAVATE

NORTHEAST WRF GRIT REMOVAL, MOVING BELT FILTER AND EQUALIZATION SYSTEM IMPROVEMENTS

EQUALIZATION TANK SYSTEM PROCESS AND INSTRUMENTATION DIAGRAM

DWG NAME: GEN-INSTR	FIELD BOOK:	SURVEYED BY:	SCALE: VERT. N/A
CONTRACT NO.: 15-0045-UT	DATE DRAWN: MARCH 2016	DRAWN BY: MJG	HORIZ. AS SHOWN
JOB NO.: 2110-210-002	DESIGNED BY: LVM	CHECKED BY: TAT	SHEET NO.: 116 of 117
APPROVED FOR CONSTRUCTION			

© COPYRIGHT 2010 KING ENGINEERING ASSOCIATES, INC. DRAWINGS AND CONCEPTS MAY NOT BE USED OR REPRODUCED WITHOUT WRITTEN PERMISSION CONSENT IS HEREBY GRANTED SPECIFICALLY TO GOVERNMENTAL AGENCIES TO REPRODUCE THIS DOCUMENT IN COMPLIANCE WITH F.S. CHAPTER 119.

O:\ENV_ENG\2110\210\002\production\Drawings\GEN-INSTR.dwg, March 18, 2020 2:58 PM, King Engineering Associate Inc.

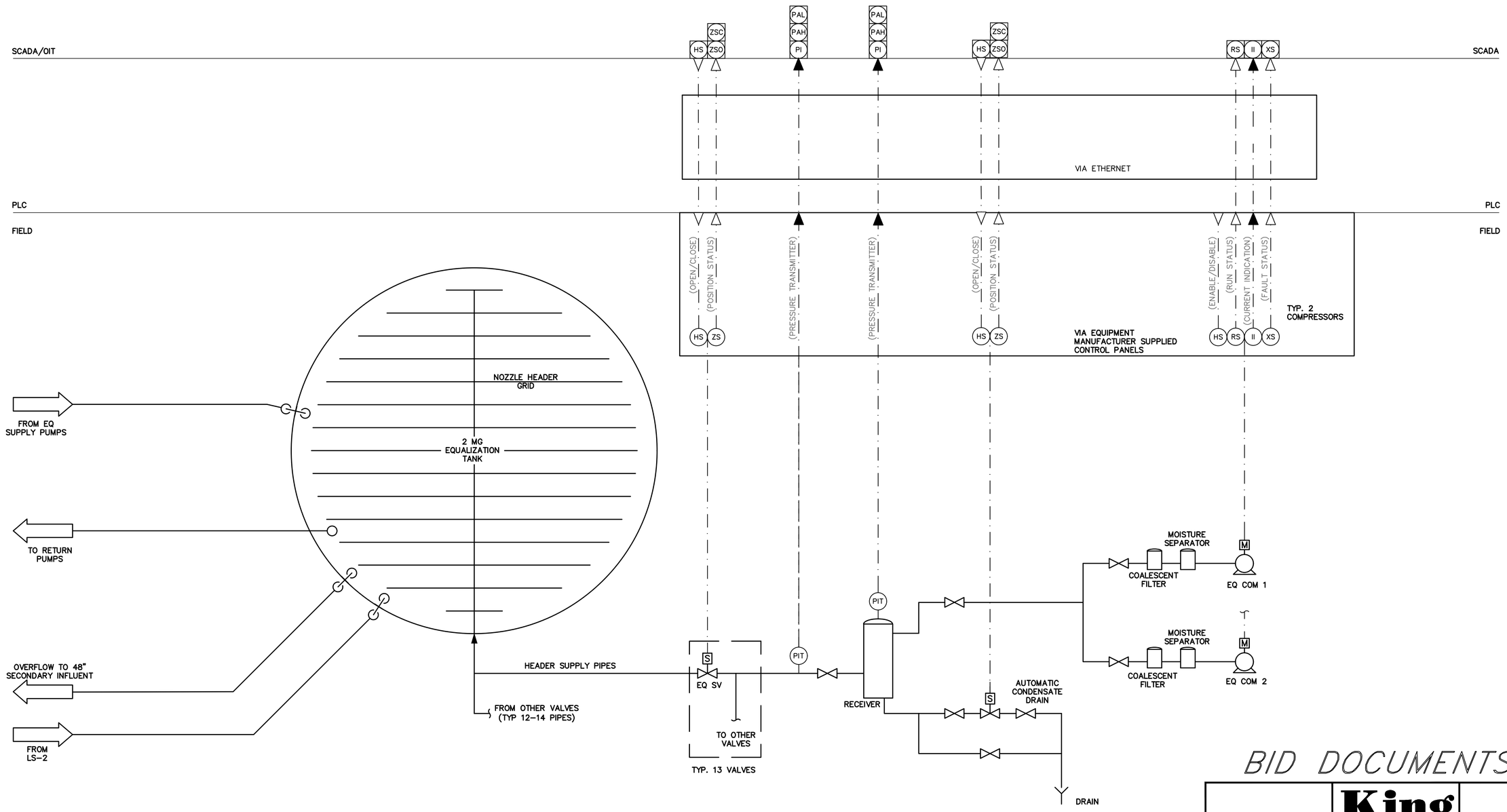

BID DOCUMENTS

King
ENGINEERING ASSOCIATES, INC.
4921 Memorial Highway
One Memorial Center, Suite 300
Tampa, Florida 33634
Phone 813 880-8881
Fax 813 880-8882
www.kingengineering.com
Engineering License #2610

© COPYRIGHT 2010 KING ENGINEERING ASSOCIATES, INC. DRAWINGS AND CONCEPTS MAY NOT BE USED OR REPRODUCED WITHOUT WRITTEN PERMISSION CONSENT IS HEREBY GRANTED SPECIFICALLY TO GOVERNMENTAL AGENCIES TO REPRODUCE THIS DOCUMENT IN COMPLIANCE WITH F.S. CHAPTER 119.

RECORD DRAWINGS

SURVEYED BY: | DRAWN BY:

REVIEWED BY:

PROJECT ENGINEER | DATE

APPROVED BY:

ENGINEER | DATE

REVISION	BY	DATE

CITY OF CLEARWATER, FLORIDA
ENGINEERING DEPARTMENT
100 S. MYRTLE AVE.
CLEARWATER, FL 33756

INVESTIGATE BEFORE YOU EXCAVATE
CALL 811
SUNSHINE STATE ONE CALL OF FLORIDA
www.callsunshine.com
(800) 432-4770
MIN. 48 HOURS BEFORE YOU EXCAVATE

NORTHEAST WRF GRIT REMOVAL, MOVING BELT FILTER AND EQUALIZATION SYSTEM IMPROVEMENTS

EQUALIZATION TANK AIR SYSTEM AND INSTRUMENTATION DIAGRAM

DWG NAME: GEN-INSTR	FIELD BOOK:	SURVEYED BY:	SCALE: VERT. N/A
CONTRACT NO.: 15-0045-UT	DATE DRAWN: MARCH 2016	DRAWN BY: CS	HORIZ. AS SHOWN
JOB NO.: 2110-210-002	DESIGNED BY: JEE	CHECKED BY: TAT	SHEET NO.: 117 of 117

APPROVED FOR CONSTRUCTION

O:\ENV_ENG\2110\210\002\production\Drawings\GEN-INSTR.dwg, March 18, 2020 2:58 PM, King Engineering Associate Inc.

CLEARWATER

BRIGHT AND BEAUTIFUL · BAY TO BEACH

CITY OF CLEARWATER, FLORIDA

ESTABLISHED 1915

NORTHEAST WATER RECLAMATION FACILITY (NE WRF)
SLUDGE BLEND TANK IMPROVEMENTS

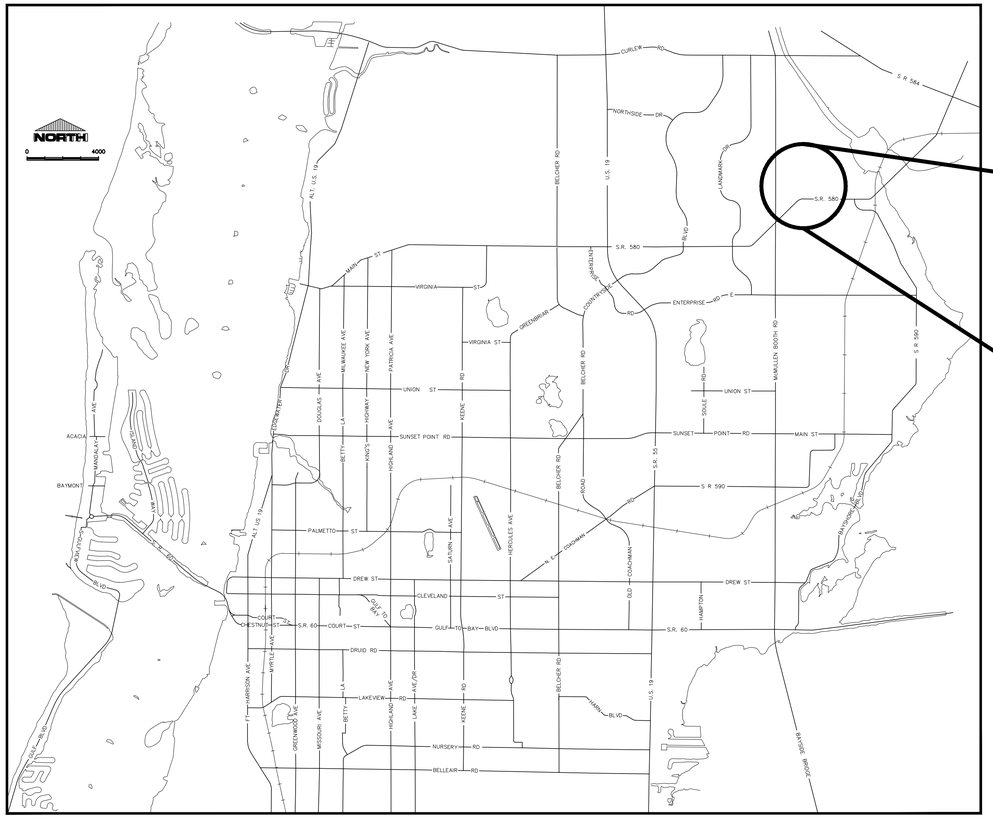

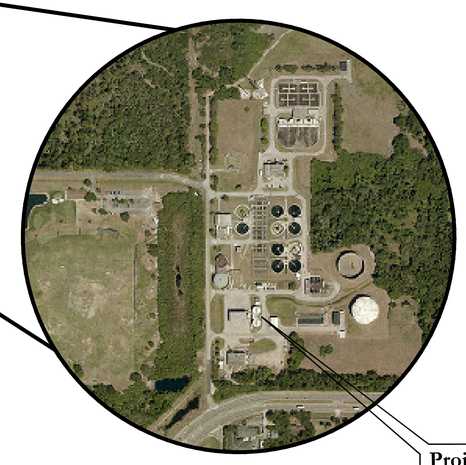

Project Location

Address: 3290 SR 580
Clearwater, FL
33755

CITY OFFICIALS

Frank Hibbard	Mayor
Mark Bunker	Councilmember
Kathleen Beckman	Councilmember
David Allbritton	Councilmember
Hoyt Hamilton	Councilmember
William B. Horne II	City Manager

THIS ITEM HAS BEEN ELECTRONICALLY SIGNED AND SEALED BY THOMAS W. FRIEDRICH, PE (FL#61281) ON THE DATE INDICATED USING A *SHA* AUTHENTICATION CODE.

PRINTED COPIES OF THIS DOCUMENT ARE NOT CONSIDERED SIGNED AND SEALED AND THE *SHA* AUTHENTICATION CODE MUST BE VERIFIED ON ANY ELECTRONIC COPIES.

THOMAS W. FRIEDRICH LICENSE No. 61281 STATE OF FLORIDA PROFESSIONAL ENGINEER

Tara Kivett, P.E.
City Engineering Director

Approved By _____
CITY ENGINEERING DIRECTOR TARA KIVETT, P.E. #86611

Date Approved _____

JonesEdmunds
CERTIFICATE OF AUTHORIZATION #1841
730 NE WALDO ROAD, GAINESVILLE, FLORIDA 32641 / (352) 377-5821
324 S HYDE PARK AVE, SUITE 250, TAMPA, FLORIDA 33606 / (813) 258-0703

BID DOCUMENTS

Contract No. 14-0036-UT
Plan Set No. 2019010

AUGUST 2019

N:\03720 Clearwater\048-01 NE Blend Tank Improvements\Contract Drawings\GENERAL\03720048801-G01.dwg

DRAWING INDEX

DWG NO.	SHEET TITLE
GENERAL	
G1	COVER
G2	DRAWING INDEX AND GENERAL NOTES
G3	ABBREVIATIONS AND DESIGNATIONS
G4	PROCESS FLOW DIAGRAM
G5	KEY SHEET
DEMOLITION	
D1	TANK COVER DEMOLITION
D2	SITE DEMOLITION (1)
D3	SITE DEMOLITION (2)
D4	DEMOLITION PHOTOS
CIVIL	
C1	EXISTING YARD PIPING AND DEMOLITION PLAN
C2	SITE PLAN
C3	DEWATERING SYSTEM BY-PASS PIPING PLAN
C4	STORMWATER POLLUTION PREVENTION PLAN NOTES (1)
C5	STORMWATER POLLUTION PREVENTION PLAN NOTES (2)
C6	STORMWATER POLLUTION PREVENTION PLAN
C7	CIVIL DETAILS
STRUCTURAL	
S1	GENERAL NOTES, ABBREVIATIONS, SYMBOLS, AND LEGEND
S2	SLUDGE PUMP STATION FOUNDATION PLAN
S3	SLUDGE PUMP STATION TOP OF STRUCTURE PLAN
S4	SLUDGE PUMP STATION SECTIONS AND ENLARGED PLAN
S5	STANDARD DETAILS
MECHANICAL	
M1	MECHANICAL ABBREVIATIONS AND LEGEND
M2	YARD PIPING PLAN (1)
M3	YARD PIPING PLAN (2)
M4	YARD PIPING SECTIONS AND UTILITY CONFLICT DETAILS
M5	UTILITY CONFLICT DETAILS
M6	SLUDGE PUMP STATION
M7	SLUDGE PUMP STATION SECTIONS
M8	DIGESTER PIPING MODIFICATIONS
M9	SLUDGE STORAGE AND BLENDING TANK PLAN, SECTION AND DETAILS
M10	MECHANICAL DETAILS (1)
M11	MECHANICAL DETAILS (2)
M12	MECHANICAL DETAILS (3)
M13	MECHANICAL DETAILS (4)
M14	MECHANICAL DETAILS (5)
M15	MECHANICAL DETAILS (6)
ELECTRICAL	
E1	ABBREVIATIONS
E2	SYMBOLS
E3	SITE PLAN
E4	POWER RISER
E5	GROUNDING PLAN
E6	SLUDGE PUMP STATION
E7	SLUDGE TANK
E8	SLUDGE VALVE STATION AND ELECTRICAL ROOM
E9	DETAILS (1)
E10	DETAILS (2)
INSTRUMENTATION AND CONTROL	
I1	SYMBOLS
I2	P&ID (1)
I3	P&ID (2)
I4	P&ID (3)
I5	P&ID (4)
I6	DETAILS (1)
I7	DETAILS (2)
I8	NETWORK DIAGRAM

REFERENCED DATA

1. THE EXISTING CONDITION INFORMATION CONTAINED HEREIN WAS OBTAINED FOR DESIGN PURPOSES AND MAY NOT BE AN ADEQUATE REPRESENTATION OF ACTUAL CONDITIONS FOR PROJECT CONSTRUCTION. ALL RISKS RESULTING FROM THE USE OR INTERPRETATION OF THE EXISTING DATA SHOWN SHALL BE BORNE BY THE CONTRACTOR.

GENERAL

2. THE CONTRACTOR SHALL COMPLY WITH ALL CONDITIONS AND REQUIREMENTS OF ALL PERMITS OBTAINED FOR THIS PROJECT.

3. CONSTRUCTION, MATERIALS, QUALITY, AND WORKMANSHIP SHALL BE IN ACCORDANCE WITH THE CONTRACT DOCUMENTS.

4. THE CONTRACTOR IS ADVISED NOT TO SCALE FROM DRAWINGS BUT TO FIELD VERIFY ALL DIMENSIONS. THE DIMENSIONS OF SPECIFIED AND FURNISHED PRODUCTS AND MATERIALS TAKE PRECEDENCE OVER DIMENSIONS INDICATED ON THE DRAWINGS. IF SIGNIFICANT DEVIATIONS OCCUR, THE CONTRACTOR SHALL NOTIFY THE ENGINEER IMMEDIATELY AND AT LEAST 72 HOURS PRIOR TO CONSTRUCTION FOR A DETERMINATION AND RESOLUTION.

CONSTRUCTION LAYOUT/LIMITS OF CONSTRUCTION

5. NO DISTURBANCE SHALL BE ALLOWED OUTSIDE OF THE RIGHT OF WAYS AND/OR THE LIMITS OF CONSTRUCTION SHOWN ON THE DRAWINGS UNLESS APPROVED BY THE OWNER OR SPECIFICALLY NOTED ON THE DRAWINGS.

EXISTING CONDITIONS

6. LOCATIONS, ELEVATIONS, AND DIMENSIONS OF EXISTING UTILITIES, STRUCTURES, AND OTHER FEATURES ARE SHOWN BASED ON THE BEST INFORMATION AVAILABLE AT THE TIME OF PREPARATION OF THESE DRAWINGS BUT ARE NOT PURPORTED TO BE ABSOLUTELY CORRECT. THERE MAY BE OTHER IMPROVEMENTS, UTILITIES, ETC. WHICH ARE WITHIN THE PROJECT AREA. CONTRACTOR SHALL VERIFY, PRIOR TO CONSTRUCTION, THE LOCATIONS, ELEVATIONS, DIMENSIONS, TYPES, AND CONDITIONS OF ALL EXISTING UTILITIES, STRUCTURES, AND OTHER FEATURES (WHETHER OR NOT SHOWN ON THE DRAWINGS) AFFECTING HIS WORK.

7. PRIOR TO SHOP DRAWING PREPARATION AND SUBMITTAL AND PURCHASE OF RELATED MATERIALS, THE CONTRACTOR SHALL FIELD VERIFY EXISTING UTILITIES (LOCATION, SIZE, MATERIALS OF CONSTRUCTION, OUTSIDE DIAMETER, WALL THICKNESS, ROUNDNESS, ELEVATIONS, ETC.) TO WHICH CONNECTION(S) WILL BE MADE. CONTRACTOR SHALL INCLUDE FIELD MEASUREMENTS ON SHOP DRAWINGS.

8. THE CONTRACTOR SHALL NOTIFY THE OWNER AND ENGINEER IN WRITING IMMEDIATELY IF CONFLICTS BETWEEN THE DRAWINGS AND ACTUAL CONDITIONS ARE DISCOVERED. THE CONTRACTOR SHALL ACCURATELY RECORD ANY SUCH CONFLICTS ON THE RECORD DRAWINGS.

9. ANY PROPERTY CORNERS, MONUMENTS, OR BENCH MARKS WITHIN THE PROJECT AREA SHALL BE PROTECTED UNLESS OTHERWISE INDICATED FOR DEMOLITION. IF ANY SUCH ITEMS ARE IN DANGER OF DAMAGE OR HAVE BEEN DAMAGED, THE CONTRACTOR SHALL NOTIFY THE OWNER AND THE ENGINEER IMMEDIATELY AND REPLACE/RESTORE THESE ITEMS AT NO ADDITIONAL COST TO THE OWNER. IF THE OWNER CHOOSES TO SELF PERFORM THE WORK OR INCURS RELATED EXPENSES, THE COSTS SHALL BE DEDUCTED FROM THE CONTRACT PRICE.

UTILITY COORDINATION

10. THE CONTRACTOR SHALL NOTIFY ALL UTILITIES NEAR THE PROJECT AREA AT LEAST 48 HOURS PRIOR TO CONSTRUCTION. THIS SHALL INCLUDE NOTIFYING "SUNSHINE STATE ONE CALL OF FLORIDA" AT LEAST 48 HOURS PRIOR TO ANY DIGGING WORK TO HAVE ALL EXISTING UTILITIES LOCATED. THE PHONE NUMBER IS 811 OR 1-800-432-4770 AND THE WEB SITE IS WWW.CALLSUNSHINE.COM. IN INSTANCES WHERE DIGGING OCCURS IN WETLANDS, THE NOTIFICATION PERIOD SHALL BE INCREASED FROM AT LEAST 48 HOURS TO AT LEAST 10 DAYS.

11. FLORIDA LAW (FS 553.851) REQUIRES THAT PERSONS MAKING EXCAVATIONS IN PUBLIC STREETS, ALLEYS, RIGHT-OF-WAYS OR UTILITY EASEMENTS MUST FIRST OBTAIN INFORMATION ON LOCATIONS OF UNDERGROUND GAS PIPELINES.

12. THE CONTRACTOR SHALL PRESERVE AND MAINTAIN EXISTING UTILITIES, STRUCTURES, AND OTHER FEATURES WITHIN THE PROJECT AREA. ANY DAMAGE SHALL BE REPAIRED BY AND AT THE EXPENSE OF THE CONTRACTOR TO THE SATISFACTION OF THE OWNER.

13. THE CONTRACTOR IS RESPONSIBLE FOR BRACING, SHORING, OR PROVIDING OTHER MEANS NECESSARY TO PROTECT AND SUPPORT EXISTING UTILITIES, STRUCTURES, AND OTHER FEATURES (EXPOSED OR UNEXPOSED) THAT MAY BE IMPACTED BY HIS WORK.

SAFETY

14. IT IS THE RESPONSIBILITY OF THE CONTRACTOR TO BE FAMILIAR WITH THE OSHA EXCAVATION SAFETY STANDARDS AND TO ABIDE BY THEM AS COVERED UNDER THE FLORIDA TRENCH SAFETY ACT.

15. THE CONTRACTOR SHALL BE SOLELY RESPONSIBLE FOR CONSTRUCTION SAFETY.

RESTORATION

16. ALL PAVING, STABILIZED EARTH, DRIVEWAYS, CURBS, SIDEWALKS, FENCES, SOD, LANDSCAPING, CULVERTS, ETC. DISTURBED BY CONSTRUCTION ACTIVITIES SHALL BE RESTORED BY AND AT THE EXPENSE OF THE CONTRACTOR TO THE SATISFACTION OF THE OWNER AND IN ACCORDANCE WITH THE CONTRACT DOCUMENTS

17. THE CONTRACTOR SHALL RESTORE EXISTING DRAINAGE PATTERNS DISTURBED BY CONSTRUCTION ACTIVITIES. FINAL GRADING SHALL PROVIDE FOR PROPER DRAINAGE WITH NO PONDING OF WATER.

ACCESS/MAINTENANCE OF FACILITIES

18. THE CONTRACTOR SHALL PROVIDE ACCESS TO ALL EXISTING UTILITIES/FACILITIES AND MAINTAIN UNINTERRUPTED SERVICES THROUGHOUT THE CONTRACT PERIOD.

19. THE CONTRACTOR SHALL COORDINATE WITH WRF OPERATOR TO ENSURE FACILITIES REMAIN IN OPERATION. IN THE EVENT FACILITIES MUST BE SHUT DOWN, THE CONTRACTOR SHALL COORDINATE WITH THE WRF OPERATOR IN ACCORDANCE WITH SPECIFICATIONS.

PIPING NOTES

20. LAY PIPE TO UNIFORM GRADE BETWEEN INDICATED ELEVATION POINTS. CONTRACTOR SHALL TAKE CARE TO PROVIDE PROPER GRADE ELEVATIONS AND ALIGNMENTS.

21. SIZE OF FITTINGS SHOWN ON PLANS SHALL CORRESPOND TO THE ADJACENT STRAIGHT RUN OF PIPE UNLESS NOTED OTHERWISE. TYPE OF JOINT AND FITTING MATERIAL SHALL BE AS SPECIFIED FOR THE ADJACENT STRAIGHT RUN OF PIPE UNLESS NOTED OTHERWISE.

22. PIPE HANGERS AND SUPPORTS ARE NOT SHOWN UNLESS A SPECIAL TYPE OR CONFIGURATION IS REQUIRED. FINAL SUPPORTS, LOCATIONS, AND TYPES SHALL BE DETERMINED BY THE CONTRACTOR IN ACCORDANCE WITH THE PROJECT SPECIFICATIONS AND INCLUDED IN THE PIPELINE DRAWING SUBMITTALS FOR REVIEW AND APPROVAL BY THE ENGINEER PRIOR TO INSTALLATION. MAXIMUM SPACING SHALL BE AS SPECIFIED.

23. ALL PRESSURIZED PIPING, FITTINGS, ETC. SHALL BE RESTRAINED. CONNECTIONS OF NEW PIPING TO EXISTING PIPING SHALL BE RESTRAINED, AND THE CONTRACTOR SHALL VERIFY EXISTING PIPING SYSTEMS ARE RESTRAINED PRIOR TO AND AFTER MAKING CONNECTIONS.

UTILITY SEPARATION

24. EACH PROPOSED UTILITY SHALL BE LAID TO ACHIEVE THE MINIMUM HORIZONTAL SEPARATION BETWEEN IT AND OTHER UTILITIES IN ACCORDANCE WITH THE TYPICAL UTILITY HORIZONTAL SEPARATION DETAIL SHOWN IN THE DRAWINGS.

25. UNLESS OTHERWISE NOTED OR SHOWN, AT LOCATIONS WHERE A PROPOSED UTILITY CROSSES ANOTHER UTILITY, THE PROPOSED UTILITY SHALL BE INSTALLED IN ACCORDANCE WITH THE TYPICAL UTILITY CONFLICT DETAIL SHOWN IN THE DRAWINGS.

26. IN THE EVENT THAT A UTILITY CONFLICT CANNOT BE RESOLVED BY MAKING A MINOR ROUTE ADJUSTMENT OR BY UTILIZING THE TYPICAL UTILITY CONFLICT DETAIL, THE CONTRACTOR SHALL SUBMIT A RELOCATION PLAN TO THE ENGINEER FOR APPROVAL PRIOR TO COMMENCING WORK. ALL RELOCATIONS EFFORTS SHALL BE SUBJECT TO THE APPROVAL OF THE ENGINEER AND ANY AFFECTED UTILITY COMPANIES.

EROSION CONTROL AND DRAINAGE

27. THE CONTRACTOR SHALL INSTALL FILTER FABRIC OVER ALL DRAINAGE STRUCTURES FOR THE DURATION OF CONSTRUCTION AND UNTIL ACCEPTANCE OF THE PROJECT BY THE OWNER. ALL DRAINAGE STRUCTURES SHALL BE CLEANED OF DEBRIS AS REQUIRED DURING AND AT THE END OF CONSTRUCTION TO PROVIDE POSITIVE DRAINAGE FLOWS.

28. ALL SLOPES AND AREAS DISTURBED BY CONSTRUCTION SHALL BE GRADED TO RESTORE PRE-CONSTRUCTION DRAINAGE FEATURES. THE AREAS SHALL THEN BE SODDED AS SPECIFIED, FERTILIZED, AND MAINTAINED UNTIL HARDY GRASS GROWTH IS ESTABLISHED IN ALL AREAS. SOD SHALL MATCH EXISTING TURF. ANY AREAS DISTURBED FOR ANY REASON PRIOR TO FINAL ACCEPTANCE OF THE JOB SHALL BE CORRECTED BY THE CONTRACTOR AT NO ADDITIONAL COST TO THE OWNER. ALL EARTHEN AREAS WILL BE SODDED AND MULCHED.

29. THE CONTRACTOR SHALL BE RESPONSIBLE FOR THE CONTROL OF DUST AND DIRT RISING AND SCATTERING IN THE AIR DURING CONSTRUCTION AND SHALL PROVIDE WATER SPRINKLING OR OTHER SUITABLE METHODS OF CONTROL. THE CONTRACTOR SHALL COMPLY WITH ALL GOVERNING REGULATIONS PERTAINING TO ENVIRONMENTAL PROTECTION.

30. THE CONTRACTOR SHALL TAKE ALL REQUIRED MEASURES TO CONTROL TURBIDITY, INCLUDING BUT NOT LIMITED TO THE INSTALLATION OF TURBIDITY BARRIERS AT ALL LOCATIONS WHERE THE POSSIBILITY OF TRANSFERRING SUSPENDED SOLIDS INTO THE RECEIVING WATER BODY EXISTS DUE TO THE PROPOSED WORK. TURBIDITY BARRIERS MUST BE MAINTAINED IN EFFECTIVE CONDITION AT ALL LOCATIONS UNTIL CONSTRUCTION IS COMPLETED AND DISTURBED SOIL AREAS ARE STABILIZED. THEREAFTER, THE CONTRACTOR MUST REMOVE THE BARRIERS. AT NO TIME SHALL THERE BE ANY OFF-SITE DISCHARGE WHICH VIOLATES STATE WATER QUALITY STANDARDS.

31. THE CONTRACTOR SHALL TAKE ALL REQUIRED MEASURES TO CONTROL EROSION AND TRANSPORT OF SEDIMENTS WITHIN AND FROM THE PROJECT AREA, SO AS TO PREVENT THE DEGRADATION OF RECEIVING WATERS, DETRIMENTAL EFFECTS ON PUBLIC OR PRIVATE PROPERTY ADJACENT TO THE PROJECT AND DAMAGE WITHIN THE PROJECT AREA. THESE MEASURES WILL INCLUDE THE CONSTRUCTION AND MAINTENANCE OF TEMPORARY AND PERMANENT EROSION CONTROLS.

32. MONITORING OF OFFSITE TRACKING OF SEDIMENTS AT THE ENTRANCES IS REQUIRED WHERE SILT FENCE WILL NOT BE PLACED TO ENABLE ACCESS TO THE SITE. IF IT APPEARS THAT SIGNIFICANT AMOUNTS OF SEDIMENT ARE BEING TRACKED OFF THE SITE, THEN THE CONTRACTOR SHALL CONSTRUCT GRAVEL ENTRANCES OR OTHER EQUIVALENT MEASURES TO HELP DISLODGE THE SOIL, SEDIMENT AND DIRT BEFORE THE VEHICLES LEAVE THE SITE.

33. AREAS WHERE THE GROUND HAS BEEN DISTURBED AND CONSTRUCTION ACTIVITIES TEMPORARILY WILL CEASE FOR MORE THAN 21 DAYS SHALL BE STABILIZED WITH A TEMPORARY SEED AND MULCH WITHIN 7 DAYS OF THE LAST DISTURBANCE. ONCE CONSTRUCTION ACTIVITY CEASES PERMANENTLY IN AN AREA WHERE THE GROUND HAS BEEN DISTURBED, THAT AREA SHALL BE STABILIZED WITH SOD OR OTHER SUITABLE STABILIZATION MATERIALS. AFTER THE SITE IS STABILIZED, ALL EXCESS SEDIMENTS AND DEBRIS SHALL BE REMOVED FROM THE PONDS AND STORMWATER CONVEYANCE SYSTEM/STRUCTURES RECEIVING DIRECT RUNOFF FROM THE AREA.

PIPING DESIGNATION

EXAMPLE:

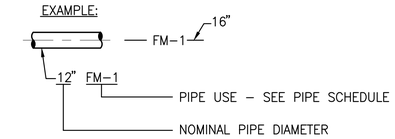

VALVE DESIGNATION

EXAMPLE:

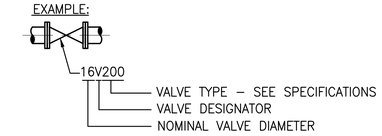

EQUIPMENT DESIGNATION

EXAMPLE:

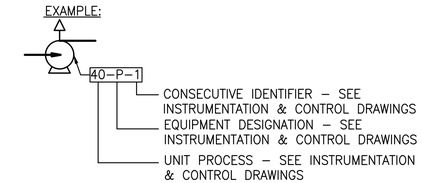

PIPE SUPPORT SYMBOLS

FLANGE PIPE SUPPORT 1 M11

YOKE PIPE SUPPORT 2 M11

DEMOLITION

DEMOLITION

X D4 PHOTO DETAIL DESIGNATION

BID DOCUMENTS

RECORD DRAWINGS
SURVEYED BY: DRAWN BY:
REVIEWED BY: PROJECT ENGINEER DATE
APPROVED BY: CITY ENGINEERING DIRECTOR TARA KIVETT, P.E. #86611 DATE

REVISION | BY | DATE

CITY OF CLEARWATER, FLORIDA
ENGINEERING DEPARTMENT
100 S. MYRTLE AVE.
CLEARWATER, FL 33756

INVESTIGATE BEFORE YOU EXCAVATE
CALL 811
SUNSHINE STATE ONE CALL OF FLORIDA
www.sunshine811.com
(800) 432-4770
MIN. 48 HOURS BEFORE YOU EXCAVATE

JonesEdmunds
CERTIFICATE OF AUTHORIZATION #1841
730 NE WALDO ROAD, GAINESVILLE, FLORIDA 32641 / (352) 377-5821
324 S HYDE PARK AVE, SUITE 250, TAMPA, FLORIDA 33606 / (813) 258-0703

NE WRF SLUDGE BLEND TANK IMPROVEMENTS
DRAWING INDEX AND GENERAL NOTES

DWG NAME: 0372004801-G02.dwg	FIELD BOOK:	SURVEYED BY:	SCALE: VERT.
CONTRACT NO.: 14-0036-UT	DATE DRAWN: AUGUST 2019	DRAWN BY: RWADE	HORIZ. NONE
JOB NO.: 03720-048-01	DESIGNED BY: DYONGE	CHECKED BY: AHOLMES	SHEET NO.: G2

APPROVED FOR CONSTRUCTION
THOMAS W. FRIEDRICH, P.E. # 61281 DATE

STANDARD ABBREVIATIONS

&	AND
@	AT
A	AUTOMATIC
AA STD	ALUMINUM ASSOCIATION STANDARD
AASHTO	AMERICAN ASSOCIATION OF STATE HIGHWAY AND TRANSPORTATION OFFICIALS
AC	ASBESTOS CEMENT
AC	ALTERNATING CURRENT
AC	AIR CONDITIONER
ACI	AMERICAN CONCRETE INSTITUTE
ADJ	ADJUSTABLE
AFF	ABOVE FINISHED FLOOR
AFG	ABOVE FINISHED GRADE
AIP	ABANDONED IN PLACE
AISI	AMERICAN IRON STEEL INSTITUTE
AIT	ANALYTICAL INDICATING TRANSMITTER
ALT	ALTERNATIVE
ALUM	ALUMINUM
AM	AUTO–MANUAL
AMPS	AMPERES
ANSI	AMERICAN NATIONAL STANDARDS INSTITUTE
AP	ANALYZER PANEL
APP	APPROVE, APPROVED
APPROX	APPROXIMATE
AR	AIR RELEASE
ARV	AIR RELEASE VALVE
ASCE	AMERICAN SOCIETY OF CIVIL ENGINEERS
ASD	ADJUSTABLE SPEED DRIVE
ASTM	AMERICAN SOCIETY FOR TESTING AND MATERIALS
ATS	AUTOMATIC TRANSFER SWITCH
AUTO	AUTOMATIC
AUX	AUXILIARY
AVE	AVENUE
AWG	AMERICAN WIRE GUAGE
AWS	AMERICAN WELDING SOCIETY
AWWA	AMERICAN WATER WORKS ASSOCIATION
B/	BOTTOM OF
B/L	BASELINE OF CONSTRUCTION
BC	BARE COPPER
BE	BURIED ELECTRICAL
BF	BLIND FLANGE
BFP	BACKFLOW PREVENTER
BFV	BUTTERFLY VALVE
BKR	BREAKER
BLD	BLIND
BLDG	BUILDING
BLVD	BOULEVARD
BM	BENCH MARK
BO	BLOW–OFF
BT	BURIED TELEPHONE
BTM	BOTTOM
BTM/	BOTTOM OF
BV	BALL VALVE
BYP	BYPASS
C	CONDUIT, CONDUCTOR, CLOSE
C/L, CL	CENTERLINE
CAM	COMPUTER–AUTO–MANUAL
CAT	CATALOGUE
CB	CIRCUIT BREAKER
CC	CENTER TO CENTER
CCS	CENTRAL CONTROL SYSTEM
CF	COLUMN FOUNDATION
CFWE	CABLE FURNISHED WITH EQUIPMENT
CI	CAST IRON
CIP	CAST IN PLACE, CAST IRON PIPE
CISP	CAST IRON SLIP PIECE
CJ	CONSTRUCTION/CONTRACTION JOINT
CLF	CHAIN LINK FENCE
CLR	CLEAR
CM	COMPUTER–MANUAL
CMP	CORRUGATED METAL PIPE
CMU	CONCRETE MASONRY UNIT
CO	CLEANOUT
CO	COMPANY
COL	COLUMN
COM	COMMUNICATION
CON	CONCENTRIC
CONC	CONCRETE
CONSTR	CONSTRUCTION
CONT	CONTINUOUS
CORP	CORPORATION
CP	CONTROL PANEL
CPT	CONTROL POWER TRANSFORMER
CRE	CORROSION RESISTANT
CRSI	CONCRETE REINFORCING STEEL INSTITUTE
CS	CARBON STEEL
CT	CURRENT TRANSFORMER, CABLE TRAY CONTACTOR
CTR	CENTERED
CV	CHECK VALVE
D	DRAIN
DB	DUCT BANK
DBI	DITCH BOTTOM INLET
DC	DIRECT CURRENT
DES	DESIGNATION
DET	DETAIL
DI	DUCTILE IRON
DIA	DIAMETER
DIP	DUCTILE IRON PIPE
DIPS	DUCTILE IRON PIPE SIZE
DIV	DIVISION
DN	DOWN, DAMPER
DR	DIMENSION RATIO
DR	DRAIN OR DRIVE
DWG	DRAWING
DXS	DOUBLE EXTRA STRONG
E	EAST
E	ELECTRIC ACTUATOR
EA	EACH
ECC	ECCENTRIC
EES	EMERGENCY EYEWASH AND SHOWER
EF	EACH FACE, EXHAUST FAN
EG	SUCH AS
EJ	EXPANSION JOINT
EL, ELEV	ELEVATION
ELB	ELBOW
ELEC	ELECTRICAL
EOP	EDGE OF PAVEMENT
EQ	EQUAL
ERCP	ELLIPTICAL REINFORCED CONCRETE PIPE
EST	ELEVATED STORAGE TANK
ETC	ETCETERA
EW	EACH WAY
EXIST	EXISTING
FBC	FLORIDA BUILDING CODE
F, FU	FUSE
F/F	FINISHED FLOOR
FAB	FABRICATED
FAC	FLORIDA ADMINISTRATIVE CODE
FCA	FLANGED COUPLING ADAPTER
FCV	FLOW CONTROL VALVE
FDEP	FLORIDA DEPARTMENT OF ENVIRONMENTAL PROTECTION
FDN	FOUNDATION
FDOT	FLORIDA DEPARTMENT OF TRANSPORTATION
FDR	FEEDER
FE	FLOW ELEMENT
FF	FINISHED FLOOR
FFE	FINISHED FLOOR ELEVATION
FG	FINISHED GRADE, FIBERGLASS
FH	FIRE HYDRANT
FIG	FIGURE
FIN	FINISHED
FIT	FLOW INDICATING TRANSMITTER
FJ	FLANGED JOINT
FL	FLOOR
FLEX	FLEXIBLE
FLG	FLANGE(D)
FND	FOUNDATION
FNPT	FEMALE NATIONAL PIPE THREAD
FO	FIBER OPTIC CABLE
FOS	FAST–OFF–SLOW
FOSA	FAST–OFF–SLOW–AUTO
FOSR	FAST–OFF–SLOW–REMOTE
FP	FULL PENETRATION, FIELD PANEL
FR	FORWARD–REVERSE
FREQ	FREQUENCY
FRP	FIBER REINFORCED PLASTIC
FS	FLORIDA STATUTES, FAR SIDE, FLOW SWITCH
FT	FOOT
G	GROUND
GAL	GALLON
GALV	GALVANIZED
GEN	GENERATOR
GFCI	GROUND FAULT CIRCUIT INTERUPTER
GND	GROUND
GPM	GALLONS PER MINUTE
GR	GRADE
GRTG	GRATING
GS	GALVANIZED STEEL
GSP	GALVANIZED STEEL PIPE
GST	GROUND STORAGE TANK
GV	GATE VALVE
H	HIGH
HD	HAND
HDD	HORIZONTAL DIRECTIONAL DRILL
HDNS	HARDNESS
HDPE	HIGH DENSITY POLYETHYLENE
HHWL	HIGH HIGH WATER LEVEL
HK	HOOK
HOA	HAND–OFF–AUTO
HOR	HAND–OFF–REMOTE
HORIZ	HORIZONTAL
HP	HORSEPOWER
HPS	HIGH PRESSURE SODIUM
HR	HANDRAIL
HSPS	HIGH SERVICE PUMP STATION
HT	HEIGHT
HWL	HIGH WATER LEVEL
I&C	INSTRUMENTATION AND CONTROL
IC	INTERRUPTING CAPACITY
ID	INSIDE DIAMETER
ID	IDENTIFICATION
IE	INVERT ELEVATION
IEEE	INSTITUTE OF ELECTRICAL AND ELECTRONIC ENGINEERS
IF	INSULATED FLANGE
IJ	ISOLATION JOINT
INC	INCORPORATED
IPS	IRON PIPE SIZE
J, JB	JUNCTION BOX
JT	JOINT
KA	KILOAMPERES
KB	KNEE BRACE
KCMIL	THOUSAND CIRCULAR MILS
KV	KILOVOLT
KVA	KILOVOLT AMPERES
KW	KILOWATTS
KWH	KILOWATT HOUR
L	LOWER
LB, LBS	POUND(S)
LE	LEVEL ELEMENT
LEL	LOWER EXPLOSIVE LIMIT
LF	LINEAR FEET
LG	LONG
LIT	LEVEL INDICATING TRANSMITTER
LIU	LIGHT INTERFACE UNIT
LLH	LONG LEG HORIZONTAL
LLV	LONG LEG VERTICAL
LLWL	LOW LOW WATER LEVEL
LOS	LOCKOUT STOP
LR	LONG RADIUS, LOCAL–REMOTE
LS	LIFT STATION
LSIG	LONG SHORT INSTANTANEOUS GROUND
LWL	LOW WATER LEVEL
M	MAGNETIC CONTACTOR COIL, MOTOR, MANUAL
M/F	MALE/FEMALE
MAX	MAXIMUM
MC	MODULATE–CLOSE
MCC	MOTOR CONTROL CENTER
MCJ	MASONRY CONTROL JOINT
MECH	MECHANICAL
MES	MITERED END SECTION
MFR	MANUFACTURER
MG	MILLION GALLON(S)
MH	MANHOLE
MIN	MINIMUM
MISC	MISCELLANEOUS
MJ	MECHANICAL JOINT
MNPT	MALE NATIONAL PIPE THREAD
MO	MOTOR OPERATOR
MOT	MAINTENANCE OF TRAFFIC
MP	METERING PUMP
MPH	MILES PER HOUR
MS	MOTOR STARTER
MSC	MANUFACTURER SUPPLIED CABLE
MT, MTD	MOUNT(ED)
MTL	METAL
MV	MEDIUM VOLTAGE
N	NORTH(ING), NEUTRAL, NORMAL
N/A	NOT APPLICABLE
NAD	NORTH AMERICAN DATUM
NAVD	NORTH AMERICAN VERTICAL DATUM
NC	NORMALLY CLOSED
NE	NORTH EAST
NEC	NATIONAL ELECTRICAL CODE
NEMA	NATIONAL ELECTRICAL MANUFACTURERS ASSOCIATION
NEUT	NEUTRAL
NGVD	NATIONAL GEODETIC VERTICAL DATUM
NIC	NOT IN CONTRACT
No.	NUMBER
NO	NORMALLY OPEN
NOM	NOMINAL
NPDES	NATIONAL POLLUTANT DISCHARGE ELIMINATION SYSTEM
NPT	NATIONAL PIPE THREAD
NRS	NONRISING STEM
NS	NEAR SIDE
NSF	NATIONAL SANITATION FOUNDATION
NTS	NOT TO SCALE
NW	NORTH WEST
OC	ON CENTER(S), OPEN–CLOSE(D)
OCA	OPEN–CLOSE–AUTO
OCR	OPEN–CLOSE–REMOTE
OD	OUTSIDE DIAMETER
OFL	OVERFLOW
OO	ON–OFF
OOA	ON–OFF–AUTO
OOR	ON–OFF–REMOTE
OPP	OPPOSITE
OS&Y	OUTSIDE STEM AND YOKE
OSC	OPEN–STOP–CLOSE
OSHA	OCCUPATIONAL SAFETY AND HEALTH ADMINISTRATION
P&ID	PIPING AND INSTRUMENTATION DIAGRAM
P/L	PROPERTY LINE
PB	PULL BOX
PCCP	PRESTRESSED CONCRETE CYLINDER PIPE
PCV	PRESSURE CONTROL VALVE
PE	PLAIN END, POLYETHYLENE
PET	POLYETHYLENE TUBING
PF	POWER FACTOR
pH	HYDROGEN ION CONCENTRATION
PH	PHASE
PI	PRESSURE INDICATOR/GAUGE
PID	PROPORTIONAL INTEGRAL DERIVATIVE
PIT	PRESSURE INDICATING TRANSMITTER
PIV	POST INDICATOR VALVE
PL	PLATE
PLC	PROGRAMMABLE LOGIC CONTROLLER
PLCS	PLACES
POC	POINT OF CONNECTION
POE	POINT OF ENTRY
POJ	PUSH ON JOINT
PP	POWER POLE
PPE	PERSONAL PROTECTIVE EQUIPMENT
PRV	PRESSURE REDUCING VALVE
PSF	POUNDS PER SQUARE FOOT
PSI	POUNDS PER SQUARE INCH
PSIA	POUNDS PER SQUARE INCH ABSOLUTE
PSID	POUNDS PER SQUARE INCH DIFFERENTIAL
PSIG	POUNDS PER SQUARE INCH GAUGE
PSV	PRESSURE SUSTAINING VALVE
PT	PRESSURE TREATED, POTENTIAL TRANSFORMER
PV	PLUG VALVE
PVC	POLYVINYL CHLORIDE
PVMT	PAVEMENT
PWR	POWER
R	RADIUS
R/W, ROW	RIGHT–OF–WAY
RCP	REINFORCED CONCRETE PIPE
RCPT	RECEPTACLE
RD	ROAD
RED	REDUCER
REF	REFERENCE
REINF	REINFORCEMENT, REINFORCING
REQ, REQ'D	REQUIRED
RGS	RIGID GALVANIZED STEEL
RJ	RESTRAINED JOINT
RM	REMOTE MULTIPLEXING MODULE
RMS	ROOT MEAN SQUARE
RPZ	REDUCED PRESSURE ZONE
RT	RIGHT
RTU	REMOTE TELEMETRY UNIT
S	SOUTH
SARV	SURGE ANTICIPATOR RELIEF VALVE
SBC	STANDARD BUILDING CODE
SCH	SCHEDULE
SCJ	SAW CUT JOINT
SDI	STEEL DECK INSTITUTE
SE	SOUTH EAST
SEC	SECOND
SF	SLOWER–FASTER, SQUARE FOOT
SHEC	SHOULDERED–END COUPLING
SHT	SHEET
SIM	SIMILAR
SJI	STEEL JOINT INSTITUTE
SM	STATIC MIXER
SP	SPACING, SPACED
SPD	SURGE PROTECTIVE DEVICE
SQ	SQUARE
SR	STATE ROAD, SURGE RELIEF
SRV	SURGE RELIEF VALVE
SS	START–STOP
SS, SST	STAINLESS STEEL
SSC	SUPERVISORY SET POINT CONTROL
SSRV	SOLID STATE REDUCED VOLTAGE
ST	SHUNT TRIP
ST	STREET
STA	STATION
STD	STANDARD
STL	STEEL
STS	STORMWATER SEWER
SW	SOUTH WEST, SWITCH
SWD	SIDE WATER DEPTH
SWJ	SOLVENT WELD JOINT
SWPPP	STORM WATER POLLUTION PREVENTION PLAN
SY	SQUARE YARD
T, THK	THICK
T/	TOP OF
T/B,T&B	TOP AND BOTTOM
TBM	TEMPORARY BENCHMARK
TEMP	TEMPERATURE
TGS	THREADED GALVANIZED STEEL
TGSP	THREADED GALVANIZED STEEL PIPE
TH	TOTAL HEAD
THD	THREADED
TJB	TERMINAL JUNCTION BOX
TK	TANK
TOC	TOP OF CONCRETE
TOS	TOP OF STEEL
TOSJ	TOP OF STEEL JOIST
TOW	TOP OF WALL
TS	TUBULAR STEEL
TSF	THICKENED SLAB FOOTING
TSP	TWISTED SHIELDED PAIR
TURB	TURBIDITY
TYP	TYPICAL
UG	UNDERGROUND
UL	UNDERWRITER'S LABORATORIES
ULC	ULTRASONIC LEVEL CONTROLLER
UNO	UNLESS NOTED OTHERWISE
UPS	UNINTERRUPTIBLE POWER SUPPLY
V	VOLTAGE, VOLTS
VERT	VERTICAL
VFD	VARIABLE FREQUENCY DRIVE
VH	VAPOR HEATER
VIB	VIBRATION
VIF	VERIFY IN FIELD
VP	VAPORIZER
W	WIDE, WATT
W/	WITH
W/O	WITHOUT
WCJ	WALL CONTROL JOINT
WF	WALL FOOTING
WGT	WEIGHT
WP	WORK POINT, WEATHERPROOF
WSE, WSEL	WATER SURFACE ELEVATION
WT	WEIGHT
WV	WATER VALVE
WWF	WELDED WIRE FABRIC
XFMR	TRANSFORMER
XS	EXTRA STRONG

CUSTOM ABBREVIATIONS

AAMA	AMERICAN ARCHITECTURAL MANUFACTURES ASSOCIATION
AISC	AMERICAN INSTITUTE OF STEEL CONSTRUCTION
BWR	BACKWASH RETURN
DF	DIGESTER FEED
DG	DIGESTER GAS
DL	DRAIN LINE
DTS	DIGESTED THICKENED SLUDGE
DW	DEWATERING
EFW	EFFLUENT FLUSHING WATER
FD	FLOOR DRAIN
FOG	FATS, OILS, AND GREASE
HB	HOSE BIB
HVAC	HEATING, VENTILATION, AND AIR CONDITIONING
IRR	IRRIGATION
NG	NATURAL GAS
PE	PROFESSIONAL ENGINEER
POT	POTABLE
PW	POTABLE WATER
SAN	SANITARY
SC	SCUM
SL	SLUDGE
TEF	THICKENER EFFLUENT
TPSL	THICKENED PRIMARY SLUDGE LINE
UGE	UNDERGROUND ELECTRIC
WAS	WASTE ACTIVATED SLUDGE
WRF	WATER RECLAMATION FACILITY
WS	WASTE SLUDGE

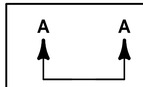

INDICATES ONE OR MORE SECTIONS CUT AND SHOWN ON THE SAME DETAIL

SECTION DESIGNATION

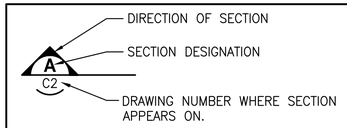

SECTION DESIGNATION

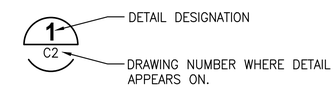

DETAIL/SECTION DESIGNATION

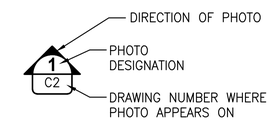

PHOTO DESIGNATION

DRAWING DESIGNATION

NOTES:

1. SEE LEGENDS AND PIPE SCHEDULE FOR ADDITIONAL ABBREVIATIONS.
2. NOT ALL ABBREVIATIONS MAY BE USED FOR THIS PROJECT.

BID DOCUMENTS

RECORD DRAWINGS
SURVEYED BY: DRAWN BY:
REVIEWED BY: PROJECT ENGINEER DATE
APPROVED BY: CITY ENGINEERING DIRECTOR TARA KIVETT, P.E. #66611 DATE

REVISION | BY | DATE

CITY OF CLEARWATER, FLORIDA
ENGINEERING DEPARTMENT
100 S. MYRTLE AVE.
CLEARWATER, FL 33756

INVESTIGATE BEFORE YOU EXCAVATE
CALL 811
SUNSHINE STATE ONE CALL OF FLORIDA
www.sunshine811.com
(800) 432-4770
MIN. 48 HOURS BEFORE YOU EXCAVATE

JonesEdmunds
CERTIFICATE OF AUTHORIZATION #1841
730 NE WALDO ROAD, GAINESVILLE, FLORIDA 32641 / (352) 377-5821
324 S HYDE PARK AVE, SUITE 250, TAMPA, FLORIDA 33606 / (813) 258-0703

NE WRF SLUDGE BLEND TANK IMPROVEMENTS
ABBREVIATIONS AND DESIGNATIONS

DWG NAME: 0372004801-G03.dwg	FIELD BOOK:	SURVEYED BY:	SCALE: VERT.
CONTRACT NO.: 14-0036-UT	DATE DRAWN: AUGUST 2019	DRAWN BY: RWADE	HORIZ. NONE
JOB NO.: 03720-048-01	DESIGNED BY: DYONGE	CHECKED BY: AHOLMES	SHEET NO.: G3

APPROVED FOR CONSTRUCTION
THOMAS W. FRIEDRICH, P.E. # 61281 DATE

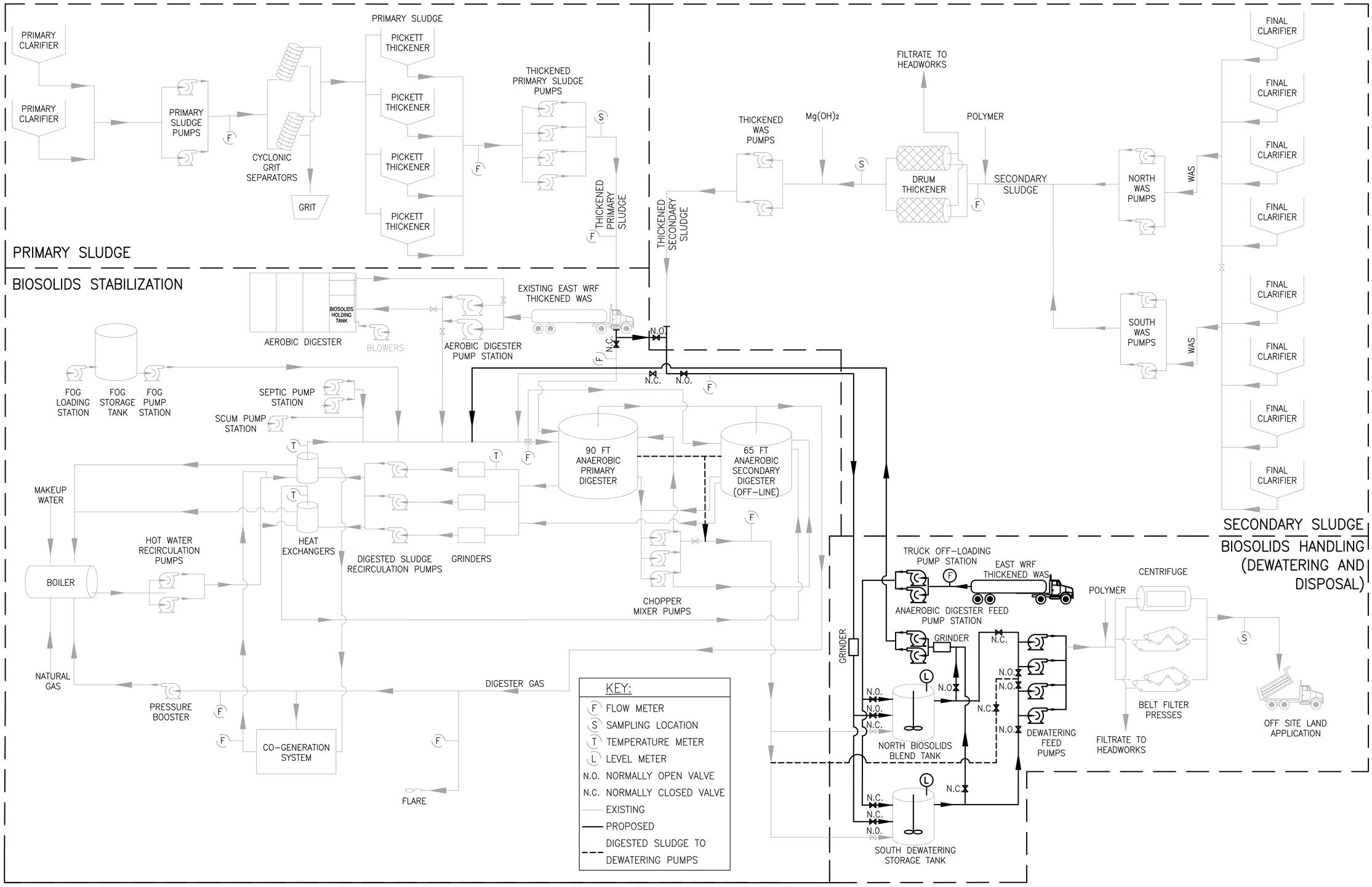

BID DOCUMENTS

RECORD DRAWINGS			
SURVEYED BY:	DRAWN BY:		
REVIEWED BY:			
PROJECT ENGINEER	DATE		
APPROVED BY:			
CITY ENGINEERING DIRECTOR TARA KIVETT, P.E. #86611	DATE	REVISION	BY / DATE

CITY OF CLEARWATER, FLORIDA
ENGINEERING DEPARTMENT
100 S. MYRTLE AVE.
CLEARWATER, FL 33756

INVESTIGATE BEFORE YOU EXCAVATE
CALL 811
SUNSHINE STATE ONE CALL OF FLORIDA
www.sunshine811.com
(800) 432-4770
MIN. 48 HOURS BEFORE YOU EXCAVATE

JonesEdmunds
CERTIFICATE OF AUTHORIZATION #1841
730 NE WALDO ROAD, GAINESVILLE, FLORIDA 32641 / (352) 377-5821
324 S HYDE PARK AVE, SUITE 250, TAMPA, FLORIDA 33606 / (813) 258-0703

NE WRF SLUDGE BLEND TANK IMPROVEMENTS
PROCESS FLOW DIAGRAM

DWG NAME: 0372004801-G04.dwg	FIELD BOOK:	SURVEYED BY:	SCALE: VERT. HORIZ. NONE
CONTRACT NO.: 14-0036-UT	DATE DRAWN: AUGUST 2019	DRAWN BY: RWADE	
JOB NO.: 03720-048-01	DESIGNED BY: DYONGE	CHECKED BY: AHOLMES	SHEET NO.: G4
APPROVED FOR CONSTRUCTION	THOMAS W. FRIEDRICH, P.E. # 61281	DATE	

LAST SAVED: 7/24/2019 7:19 AM CAUTODESK DWG LOCATION:\\TPA-MAIN\DRAFTING\03720 CLEARWATER\048-01 NE BLEND TANK IMPROVEMENTS\CONTRACT DRAWINGS\GENERAL\0372004801-G04.DWG

N

GRAPHIC SCALE

0 15 30 60

SCALE IN FEET
1" = 30'

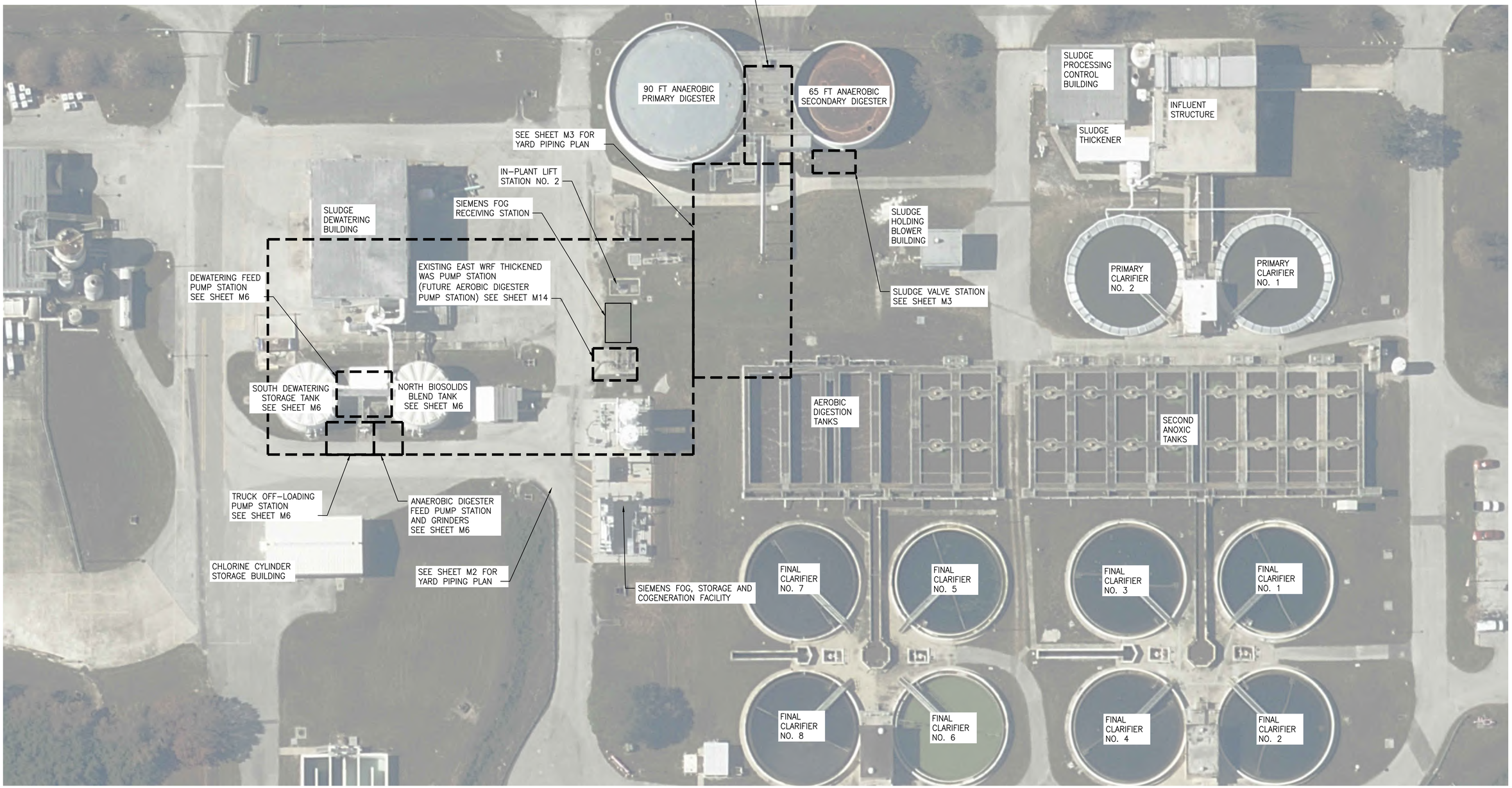

BID DOCUMENTS

LAST SAVED: 8/15/2019 3:55 PM RMEADOWS DWG LOCATION:\\TPA-MAIN\DRAFTING\03720 CLEARWATER\048-01 NE BLEND TANK IMPROVEMENTS\CONTRACT DRAWINGS\CIVIL\0372004801-G05.DWG

RECORD DRAWINGS			
SURVEYED BY:	DRAWN BY:		
REVIEWED BY:			
PROJECT ENGINEER	DATE		
APPROVED BY:			
CITY ENGINEERING DIRECTOR TARA KIVETT, P.E. #66611	DATE		
REVISION	BY	DATE	

CITY OF CLEARWATER, FLORIDA
ENGINEERING DEPARTMENT
100 S. MYRTLE AVE.
CLEARWATER, FL 33756

INVESTIGATE BEFORE YOU EXCAVATE
CALL 811
SUNSHINE STATE
ONE CALL
OF FLORIDA
www.sunshine811.com
(800) 432-4770
MIN. 48 HOURS
BEFORE YOU EXCAVATE

JonesEdmunds
CERTIFICATE OF AUTHORIZATION #1841
730 NE WALDO ROAD, GAINESVILLE, FLORIDA 32641 / (352) 377-5821
324 S HYDE PARK AVE, SUITE 250, TAMPA, FLORIDA 33606 / (813) 258-0703

NE WRF SLUDGE BLEND
TANK IMPROVEMENTS
KEY SHEET

DWG NAME: 0372004801-G05.dwg	FIELD BOOK:	SURVEYED BY:	SCALE: VERT.
CONTRACT NO.: 14-0036-UT	DATE DRAWN: AUGUST 2019	DRAWN BY: RWADE	HORIZ. AS NOTED
JOB NO.: 03720-048-01	DESIGNED BY: DYONGE	CHECKED BY: AHOLMES	SHEET NO.: G5
APPROVED FOR CONSTRUCTION	THOMAS W. FRIEDRICH, P.E. # 61281		DATE

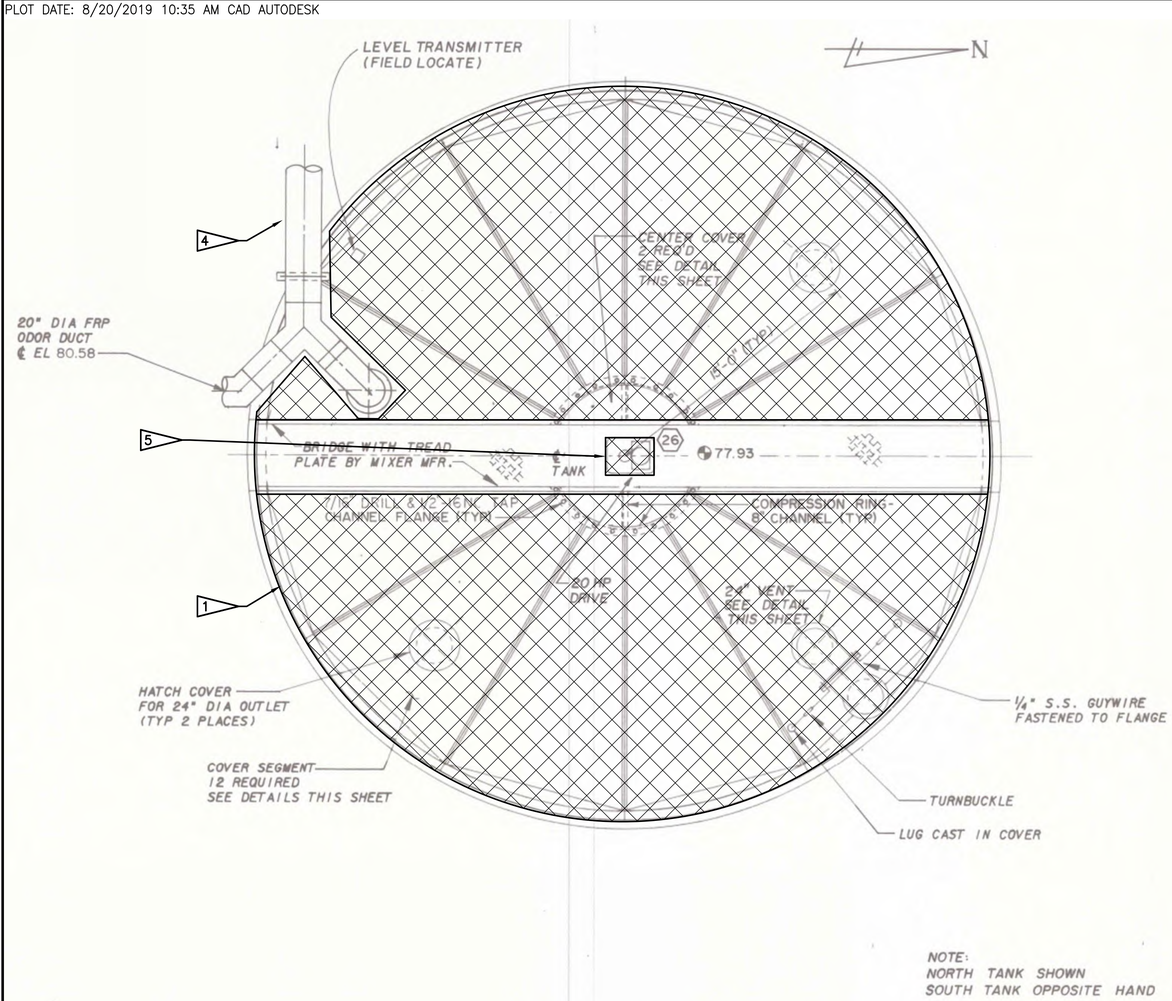

NOTE:
NORTH TANK SHOWN
SOUTH TANK OPPOSITE HAND

FIBERGLASS COVER - PLAN

SCALE: 1/4" = 1'-0"

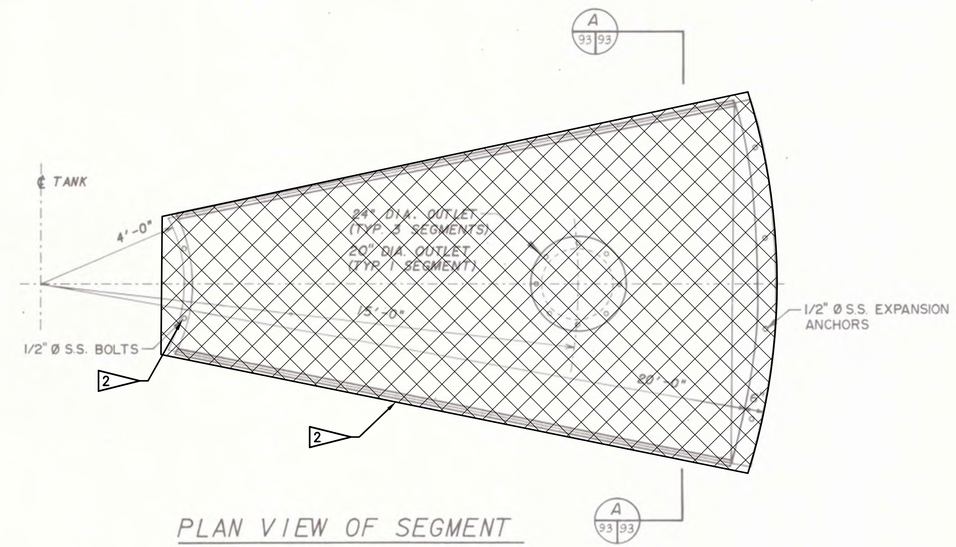

PLAN VIEW OF SEGMENT

SCALE: 1/2" = 1'-0"

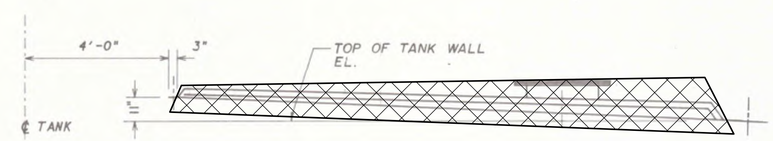

SIDE VIEW OF SEGMENT

SCALE: 1/2" = 1'-0"

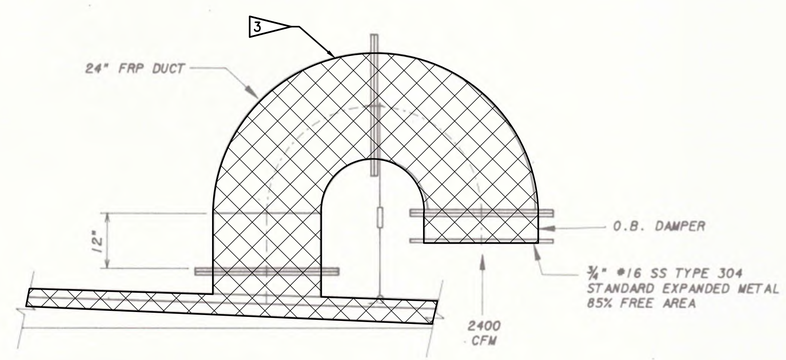

VENT DETAIL

NOT TO SCALE

NOTES:

1. REMOVE EXISTING FRP TANK COVER (TYP OF 2 TANKS)
2. REMOVE TANK COVER HARDWARE
3. REMOVE EXISTING FRP VENT AND DAMPER
4. TEMPORARILY REMOVE, STORE, PROTECT, AND RECONNECT FRP DUCTS TO NEW ALUMINUM COVER
5. REMOVE RADIAL SLUDGE AGITATOR AS SHOWN IN SHEET D2

THOMAS W. FRIEDRICH LICENSE No. 61281 STATE OF FLORIDA PROFESSIONAL ENGINEER

THIS ITEM HAS BEEN ELECTRONICALLY SIGNED AND SEALED BY THOMAS W. FRIEDRICH, PE (FL#61281) ON THE DATE INDICATED USING A *SHA* AUTHENTICATION CODE.

PRINTED COPIES OF THIS DOCUMENT ARE NOT CONSIDERED SIGNED AND SEALED AND THE *SHA* AUTHENTICATION CODE MUST BE VERIFIED ON ANY ELECTRONIC COPIES.

BID DOCUMENTS

LAST SAVED: 8/20/2019 8:18 AM CAUTODESK DWG LOCATION:\\TPA-MAIN\DRAFTING\03720 CLEARWATER\048-01 NE BLEND TANK IMPROVEMENTS\CONTRACT DRAWINGS\DEMOLITION\0372004801-D01.DWG

RECORD DRAWINGS			
SURVEYED BY:	DRAWN BY:		
REVIEWED BY: PROJECT ENGINEER	DATE		
APPROVED BY: CITY ENGINEERING DIRECTOR TARA KIVETT, P.E. #86611	DATE	REVISION	BY / DATE

CITY OF CLEARWATER, FLORIDA
ENGINEERING DEPARTMENT
100 S. MYRTLE AVE.
CLEARWATER, FL 33756

INVESTIGATE BEFORE YOU EXCAVATE
CALL 811
SUNSHINE STATE ONE CALL OF FLORIDA
www.sunshine811.com
(800) 432-4770
MIN. 48 HOURS BEFORE YOU EXCAVATE

JonesEdmunds
CERTIFICATE OF AUTHORIZATION #1841
730 NE WALDO ROAD, GAINESVILLE, FLORIDA 32641 / (352) 377-5821
324 S HYDE PARK AVE, SUITE 250, TAMPA, FLORIDA 33606 / (813) 258-0703

NE WRF SLUDGE BLEND
TANK IMPROVEMENTS
TANK COVER DEMOLITION

DWG NAME: 0372004801-D01.dwg	FIELD BOOK:	SURVEYED BY:	SCALE: VERT.
CONTRACT NO.: 14-0036-UT	DATE DRAWN: AUGUST 2019	DRAWN BY: RWADE	HORIZ. AS NOTED
JOB NO.: 03720-048-01	DESIGNED BY: SMENARD	CHECKED BY: AHOLMES	SHEET NO.: D1
APPROVED FOR CONSTRUCTION	THOMAS W. FRIEDRICH, P.E. # 61281		DATE

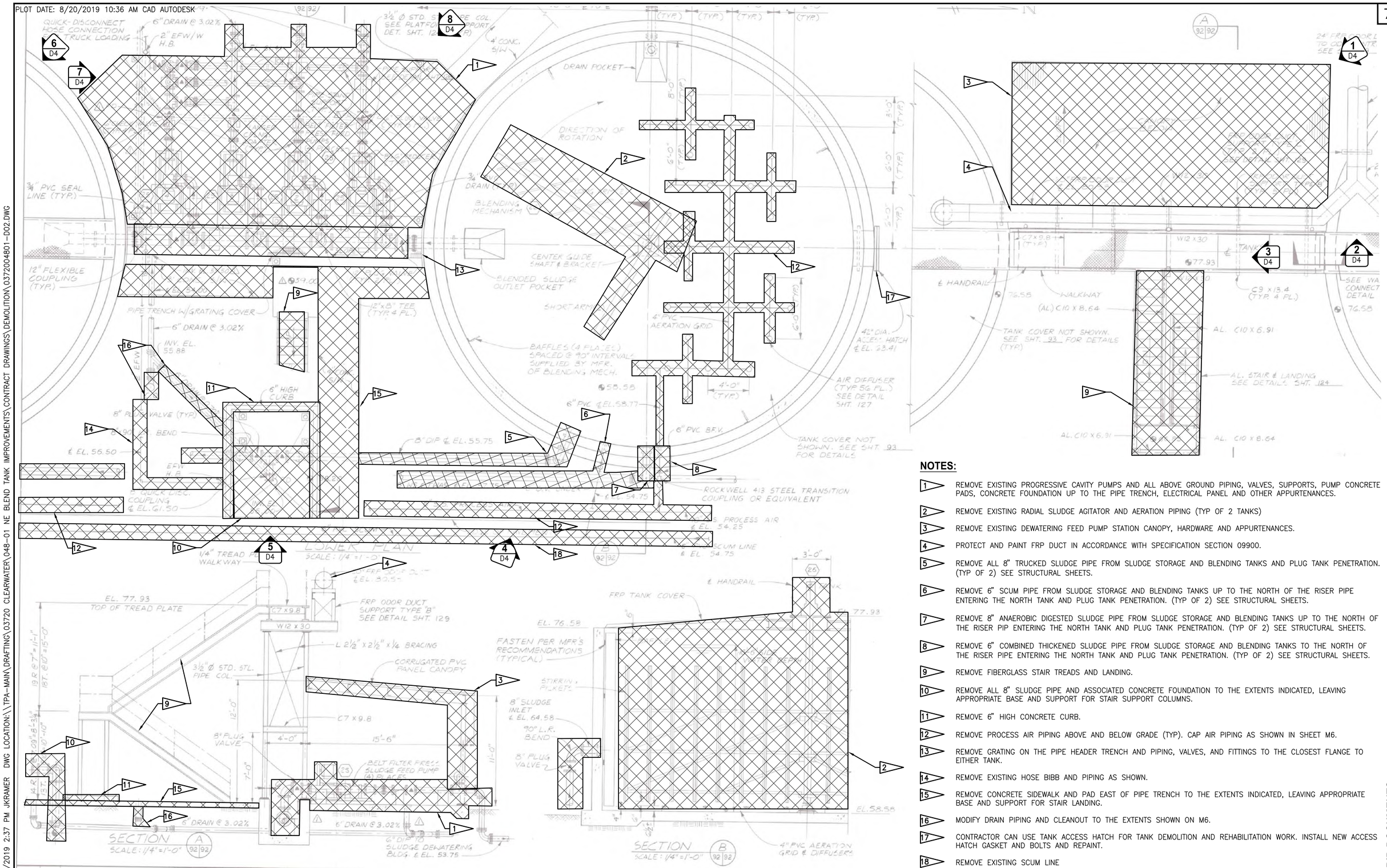

NOTES:

1. REMOVE EXISTING PROGRESSIVE CAVITY PUMPS AND ALL ABOVE GROUND PIPING, VALVES, SUPPORTS, PUMP CONCRETE PADS, CONCRETE FOUNDATION UP TO THE PIPE TRENCH, ELECTRICAL PANEL AND OTHER APPURTENANCES.
2. REMOVE EXISTING RADIAL SLUDGE AGITATOR AND AERATION PIPING (TYP OF 2 TANKS)
3. REMOVE EXISTING DEWATERING FEED PUMP STATION CANOPY, HARDWARE AND APPURTENANCES.
4. PROTECT AND PAINT FRP DUCT IN ACCORDANCE WITH SPECIFICATION SECTION 09900.
5. REMOVE ALL 8" TRUCKED SLUDGE PIPE FROM SLUDGE STORAGE AND BLENDING TANKS AND PLUG TANK PENETRATION. (TYP OF 2) SEE STRUCTURAL SHEETS.
6. REMOVE 6" SCUM PIPE FROM SLUDGE STORAGE AND BLENDING TANKS UP TO THE NORTH OF THE RISER PIPE ENTERING THE NORTH TANK AND PLUG TANK PENETRATION. (TYP OF 2) SEE STRUCTURAL SHEETS.
7. REMOVE 8" ANAEROBIC DIGESTED SLUDGE PIPE FROM SLUDGE STORAGE AND BLENDING TANKS UP TO THE NORTH OF THE RISER PIP ENTERING THE NORTH TANK AND PLUG TANK PENETRATION. (TYP OF 2) SEE STRUCTURAL SHEETS.
8. REMOVE 6" COMBINED THICKENED SLUDGE PIPE FROM SLUDGE STORAGE AND BLENDING TANKS TO THE NORTH OF THE RISER PIPE ENTERING THE NORTH TANK AND PLUG TANK PENETRATION. (TYP OF 2) SEE STRUCTURAL SHEETS.
9. REMOVE FIBERGLASS STAIR TREADS AND LANDING.
10. REMOVE ALL 8" SLUDGE PIPE AND ASSOCIATED CONCRETE FOUNDATION TO THE EXTENTS INDICATED, LEAVING APPROPRIATE BASE AND SUPPORT FOR STAIR SUPPORT COLUMNS.
11. REMOVE 6" HIGH CONCRETE CURB.
12. REMOVE PROCESS AIR PIPING ABOVE AND BELOW GRADE (TYP). CAP AIR PIPING AS SHOWN IN SHEET M6.
13. REMOVE GRATING ON THE PIPE HEADER TRENCH AND PIPING, VALVES, AND FITTINGS TO THE CLOSEST FLANGE TO EITHER TANK.
14. REMOVE EXISTING HOSE BIBB AND PIPING AS SHOWN.
15. REMOVE CONCRETE SIDEWALK AND PAD EAST OF PIPE TRENCH TO THE EXTENTS INDICATED, LEAVING APPROPRIATE BASE AND SUPPORT FOR STAIR LANDING.
16. MODIFY DRAIN PIPING AND CLEANOUT TO THE EXTENTS SHOWN ON M6.
17. CONTRACTOR CAN USE TANK ACCESS HATCH FOR TANK DEMOLITION AND REHABILITATION WORK. INSTALL NEW ACCESS HATCH GASKET AND BOLTS AND REPAINT.
18. REMOVE EXISTING SCUM LINE

BID DOCUMENTS

RECORD DRAWINGS

SURVEYED BY: DRAWN BY:

REVIEWED BY: PROJECT ENGINEER DATE

APPROVED BY: CITY ENGINEERING DIRECTOR TARA KIVETT, P.E. #86611 DATE

REVISION	BY	DATE

CITY OF CLEARWATER, FLORIDA
ENGINEERING DEPARTMENT
100 S. MYRTLE AVE.
CLEARWATER, FL 33756

INVESTIGATE BEFORE YOU EXCAVATE
CALL 811
SUNSHINE STATE ONE CALL OF FLORIDA
www.sunshine811.com
(800) 432-4770
MIN. 48 HOURS BEFORE YOU EXCAVATE

JonesEdmunds
CERTIFICATE OF AUTHORIZATION #1841
730 NE WALDO ROAD, GAINESVILLE, FLORIDA 32641 / (352) 377-5821
324 S HYDE PARK AVE, SUITE 250, TAMPA, FLORIDA 33606 / (813) 258-0703

NE WRF SLUDGE BLEND TANK IMPROVEMENTS
SITE DEMOLITION (1)

DWG NAME: 0372004801-D02.dwg	FIELD BOOK:	SURVEYED BY:	SCALE: VERT.
CONTRACT NO.: 14-0036-UT	DATE DRAWN: AUGUST 2019	DRAWN BY: RWADE	HORIZ. AS NOTED
JOB NO.: 03720-048-01	DESIGNED BY: SMENARD	CHECKED BY: AHOLMES	SHEET NO.: D2

APPROVED FOR CONSTRUCTION
THOMAS W. FRIEDRICH, P.E. # 61281 DATE

LAST SAVED: 6/14/2019 2:37 PM JKRAMER DWG LOCATION:\\TPA-MAIN\DRAFTING\03720 CLEARWATER\048-01 NE BLEND TANK IMPROVEMENTS\CONTRACT DRAWINGS\DEMOLITION\0372004801-D02.DWG

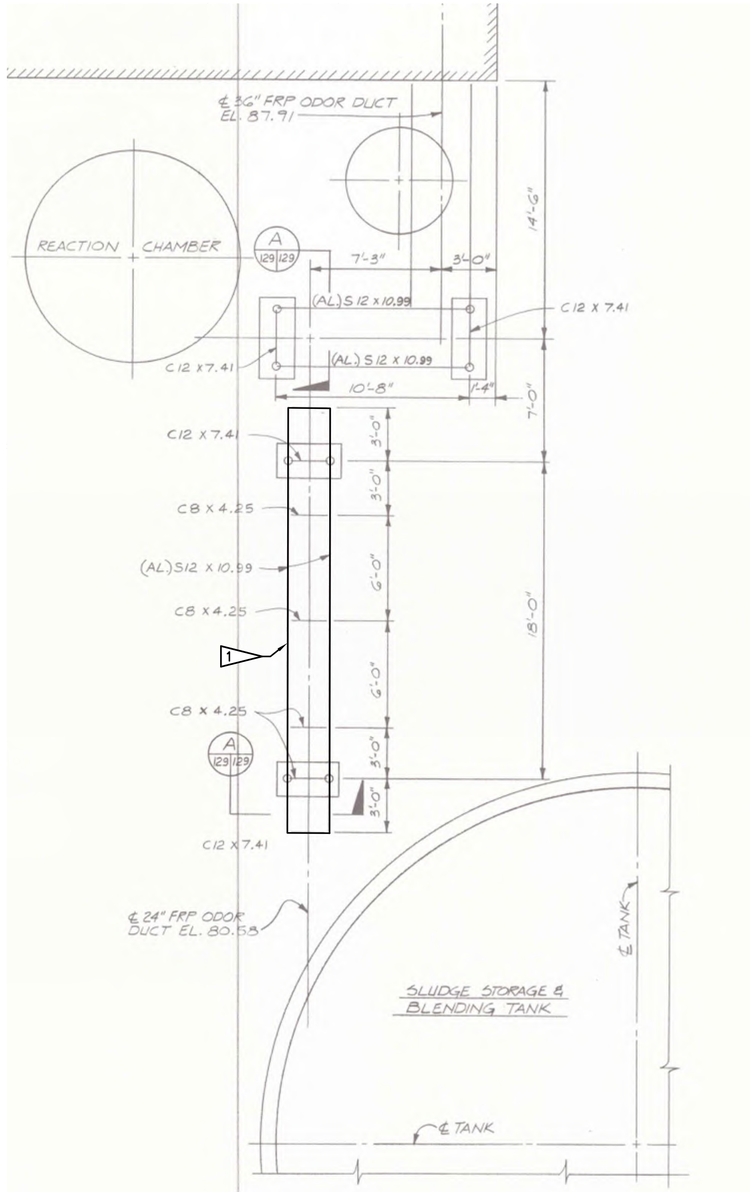

PLAN- ODOR DUCT SUPPORT FRAMING
SCALE: 1/4" = 1'-0"

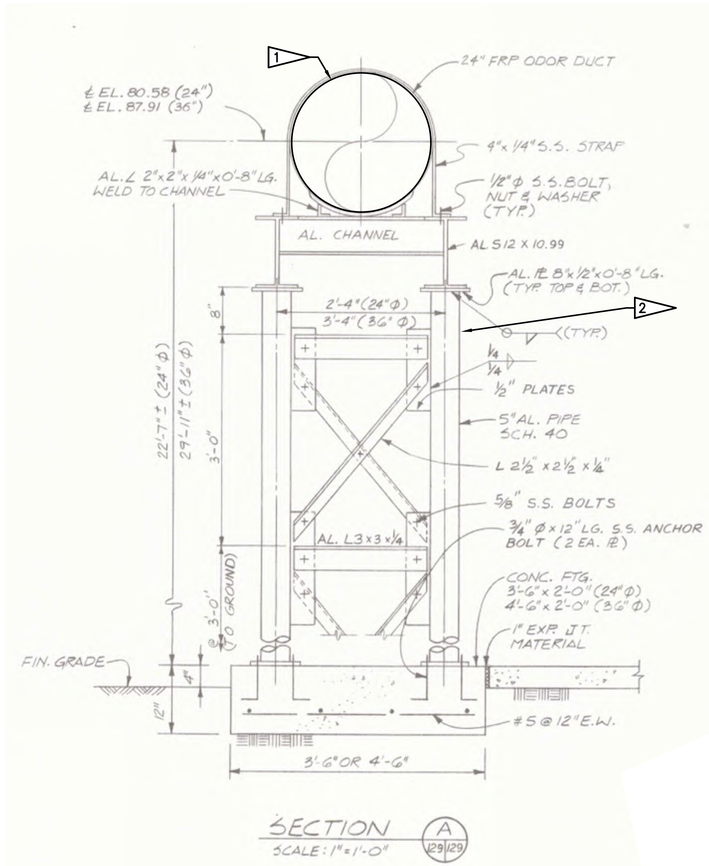

SECTION A 129/129
SCALE: 1" = 1'-0"

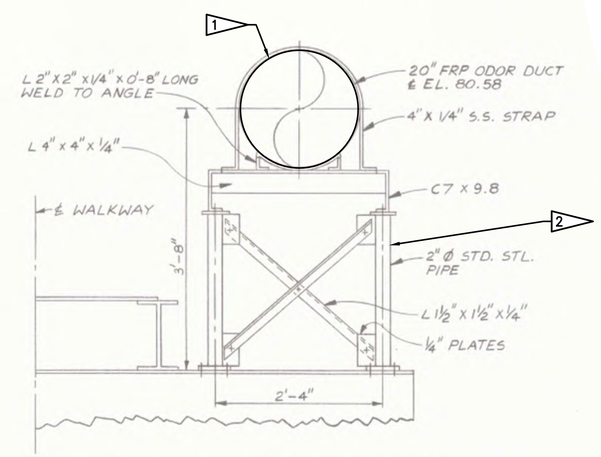

FRP PIPE SUPPORT DETAIL - TYPE "B"
SCALE: 1" = 1'-0"

NOTES:

1. PAINT FRP DUCT IN ACCORDANCE WITH SPECIFICATION SECTION 09900.
2. PIPE SUPPORT TOWERS TO REMAIN. PROTECT DURING CONSTRUCTION.

BID DOCUMENTS

LAST SAVED: 4/4/2019 4:46 PM CAUTODESK DWG LOCATION:\\TPA-MAIN\DRAFTING\03720 CLEARWATER\048-01 NE BLEND TANK IMPROVEMENTS\CONTRACT DRAWINGS\DEMOLITION\03720048801-D03.DWG

RECORD DRAWINGS
SURVEYED BY: DRAWN BY:
REVIEWED BY: PROJECT ENGINEER DATE
APPROVED BY: CITY ENGINEERING DIRECTOR TARA KIVETT, P.E. #66611 DATE

REVISION | BY | DATE

CITY OF CLEARWATER, FLORIDA
ENGINEERING DEPARTMENT
100 S. MYRTLE AVE.
CLEARWATER, FL 33756

INVESTIGATE BEFORE YOU EXCAVATE
CALL 811
SUNSHINE STATE ONE CALL OF FLORIDA
www.sunshine811.com
(800) 432-4770
MIN. 48 HOURS BEFORE YOU EXCAVATE

JonesEdmunds
CERTIFICATE OF AUTHORIZATION #1841
730 NE WALDO ROAD, GAINESVILLE, FLORIDA 32641 / (352) 377-5821
324 S HYDE PARK AVE, SUITE 250, TAMPA, FLORIDA 33606 / (813) 258-0703

NE WRF SLUDGE BLEND
TANK IMPROVEMENTS
SITE DEMOLITION (2)

DWG NAME: 03720048801-D03.dwg	FIELD BOOK:	SURVEYED BY:	SCALE: VERT.
CONTRACT NO.: 14-0036-UT	DATE DRAWN: AUGUST 2019	DRAWN BY: RWADE	HORIZ. AS NOTED
JOB NO.: 03720-048-01	DESIGNED BY: SMENARD	CHECKED BY: AHOLMES	SHEET NO.: D3

APPROVED FOR CONSTRUCTION
THOMAS W. FRIEDRICH, P.E. # 61281 DATE

PLOT DATE: 8/20/2019 10:36 AM CAD AUTODESK

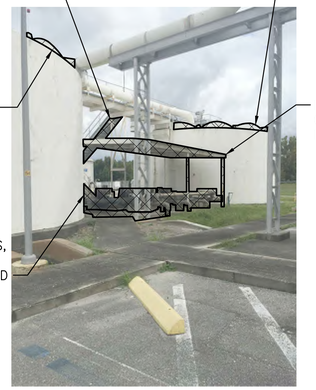

PHOTO DETAIL 1
NTS

PHOTO DETAIL 2
NTS

PHOTO DETAIL 3
NTS

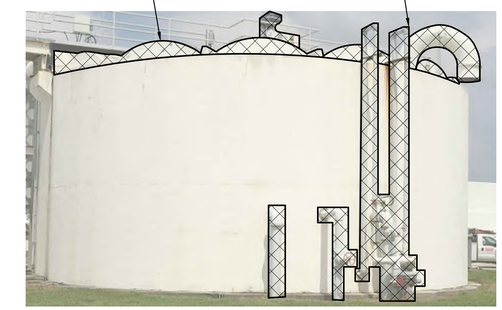

PHOTO DETAIL 4
NTS

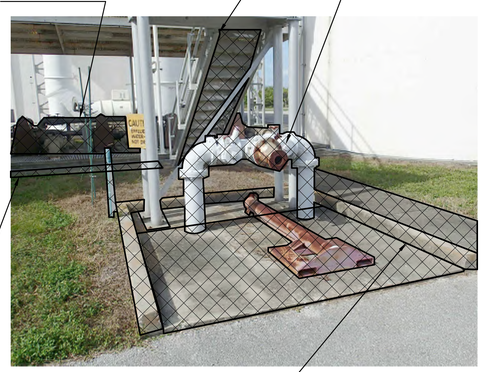

PHOTO DETAIL 5
NTS

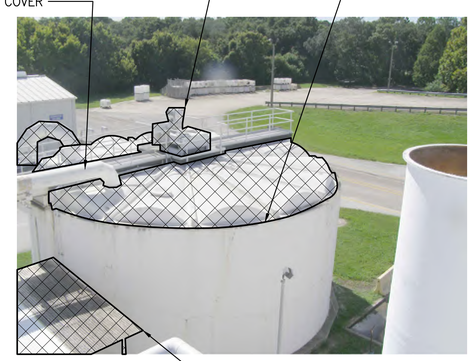

PHOTO DETAIL 6
NTS

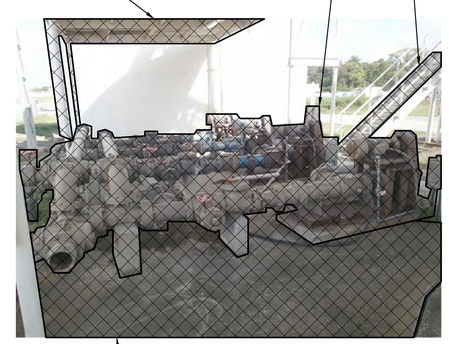

PHOTO DETAIL 7
NTS

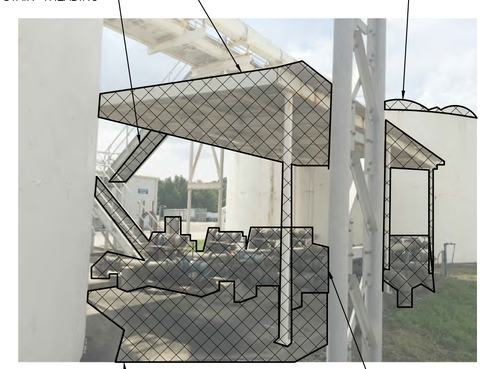

PHOTO DETAIL 8
NTS

BID DOCUMENTS

RECORD DRAWINGS
SURVEYED BY: DRAWN BY:
REVIEWED BY: PROJECT ENGINEER DATE
APPROVED BY: CITY ENGINEERING DIRECTOR TARA KIVETT, P.E. #66611 DATE

REVISION	BY	DATE

CITY OF CLEARWATER, FLORIDA
ENGINEERING DEPARTMENT
100 S. MYRTLE AVE.
CLEARWATER, FL 33756

INVESTIGATE BEFORE YOU EXCAVATE
CALL 811
SUNSHINE STATE ONE CALL OF FLORIDA
www.sunshine811.com
(800) 432-4770
MIN. 48 HOURS BEFORE YOU EXCAVATE

JonesEdmunds
CERTIFICATE OF AUTHORIZATION #1841
730 NE WALDO ROAD, GAINESVILLE, FLORIDA 32641 / (352) 377-5821
324 S HYDE PARK AVE, SUITE 250, TAMPA, FLORIDA 33606 / (813) 258-0703

NE WRF SLUDGE BLEND TANK IMPROVEMENTS
DEMOLITION PHOTOS

DWG NAME: 0372004801-D04.dwg	FIELD BOOK:	SURVEYED BY:	SCALE: VERT.
CONTRACT NO.: 14-0036-UT	DATE DRAWN: AUGUST 2019	DRAWN BY: RWADE	HORIZ. AS NOTED
JOB NO.: 03720-048-01	DESIGNED BY: SMENARD	CHECKED BY: AHOLMES	SHEET NO.: D4

APPROVED FOR CONSTRUCTION
THOMAS W. FRIEDRICH, P.E. # 61281 DATE

LAST SAVED: 4/5/2019 9:48 AM BY: FRIEDRICHT
CAD FILE: C:\Users\friedrich\AppData\Local\Temp\AcPublish_20972\0372004801-D04.DWG
XREFS: 0372004801-XB-TOPO; 0372004801-XB-EXISTING
PLOT STYLE: JE-Color.ctb
LAYOUT: D4

PLOT DATE: 8/20/2019 11:01 AM CAD AUTODESK

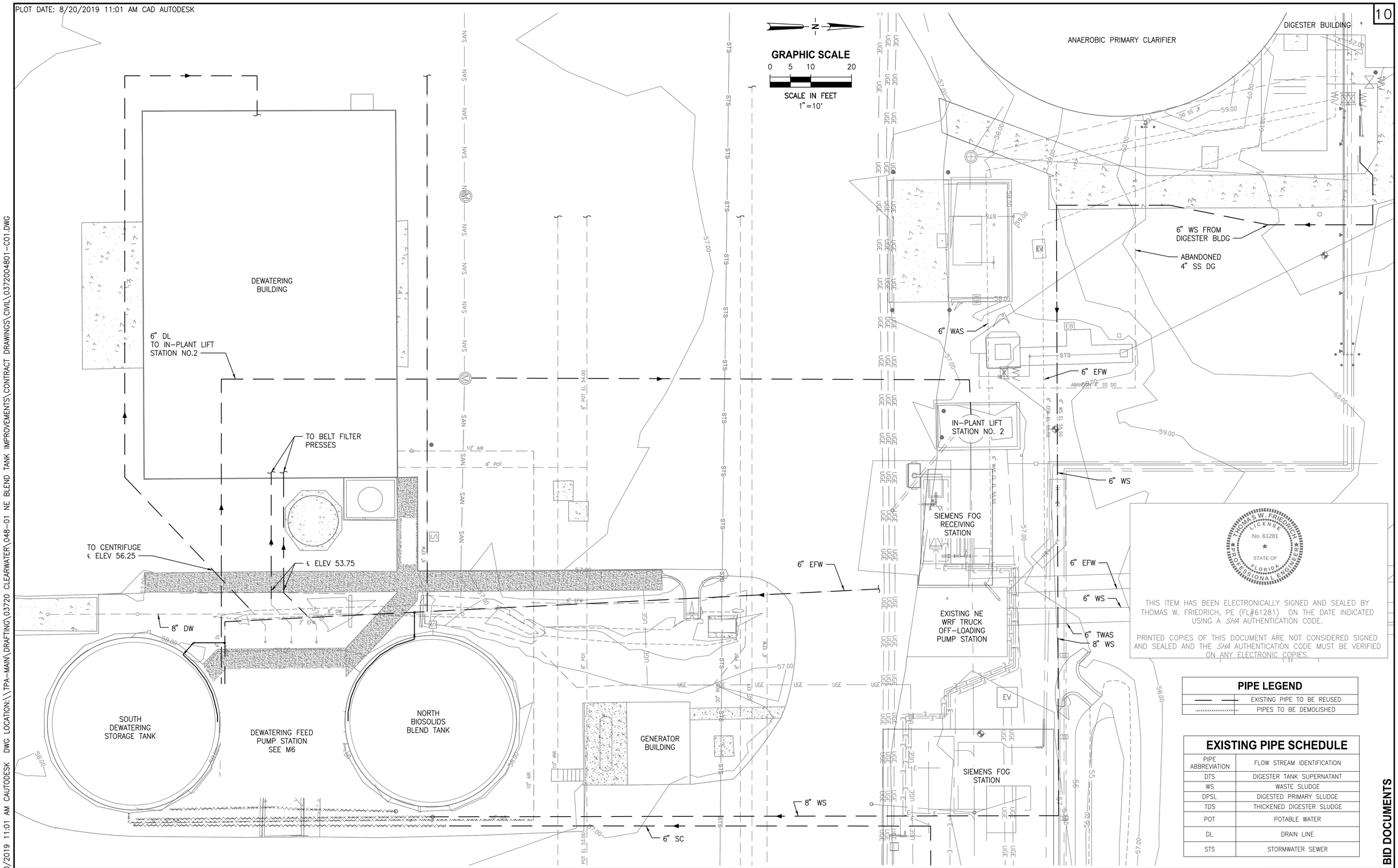

THIS ITEM HAS BEEN ELECTRONICALLY SIGNED AND SEALED BY THOMAS W. FRIEDRICH, PE (FL#61281) ON THE DATE INDICATED USING A *SHA* AUTHENTICATION CODE.

PRINTED COPIES OF THIS DOCUMENT ARE NOT CONSIDERED SIGNED AND SEALED AND THE *SHA* AUTHENTICATION CODE MUST BE VERIFIED ON ANY ELECTRONIC COPIES.

THOMAS W. FRIEDRICH LICENSE No. 61281 STATE OF FLORIDA PROFESSIONAL ENGINEER

PIPE LEGEND

	EXISTING PIPE TO BE REUSED
	PIPES TO BE DEMOLISHED

EXISTING PIPE SCHEDULE

PIPE ABBREVIATION	FLOW STREAM IDENTIFICATION
DTS	DIGESTER TANK SUPERNATANT
WS	WASTE SLUDGE
DPSL	DIGESTED PRIMARY SLUDGE
TDS	THICKENED DIGESTER SLUDGE
POT	POTABLE WATER
DL	DRAIN LINE
STS	STORMWATER SEWER

BID DOCUMENTS

LAST SAVED: 8/20/2019 11:01 AM CAUTODESK DWG LOCATION:\\TPA-MAIN\DRAFTING\03720 CLEARWATER\048-01 NE BLEND TANK IMPROVEMENTS\CONTRACT DRAWINGS\CIVIL\0372004801-C01.DWG

RECORD DRAWINGS
SURVEYED BY: DRAWN BY:
REVIEWED BY:
PROJECT ENGINEER DATE
APPROVED BY:
CITY ENGINEERING DIRECTOR TARA KIVETT, P.E. #66611 DATE

REVISION BY DATE

CITY OF CLEARWATER, FLORIDA
ENGINEERING DEPARTMENT
100 S. MYRTLE AVE.
CLEARWATER, FL 33756

INVESTIGATE BEFORE YOU EXCAVATE
CALL 811
SUNSHINE STATE ONE CALL OF FLORIDA
www.sunshine811.com
(800) 432-4770
MIN. 48 HOURS BEFORE YOU EXCAVATE

JonesEdmunds
CERTIFICATE OF AUTHORIZATION #1841
730 NE WALDO ROAD, GAINESVILLE, FLORIDA 32641 / (352) 377-5821
324 S HYDE PARK AVE, SUITE 250, TAMPA, FLORIDA 33606 / (813) 258-0703

NE WRF SLUDGE BLEND TANK IMPROVEMENTS
EXISTING YARD PIPING AND DEMOLITION PLAN

DWG NAME: 0372004801-C01.dwg	FIELD BOOK:	SURVEYED BY:	SCALE: VERT.
CONTRACT NO.: 14-0036-UT	DATE DRAWN: AUGUST 2019	DRAWN BY: RWADE	HORIZ. AS NOTED
JOB NO.: 03720-048-01	DESIGNED BY: DYONGE	CHECKED BY: AHOLMES	SHEET NO.: C1

APPROVED FOR CONSTRUCTION
THOMAS W. FRIEDRICH, P.E. # 61281 DATE

NOTES:

1. CONTRACTOR TO REGRADE DRAINAGE SWALE TO INVERTS OF CULVERT PIPES.
2. INSTALL FABRIC #57 STONE PER DETAIL ON M14.

GRAPHIC SCALE
0 5 10 20
SCALE IN FEET
1" = 10'

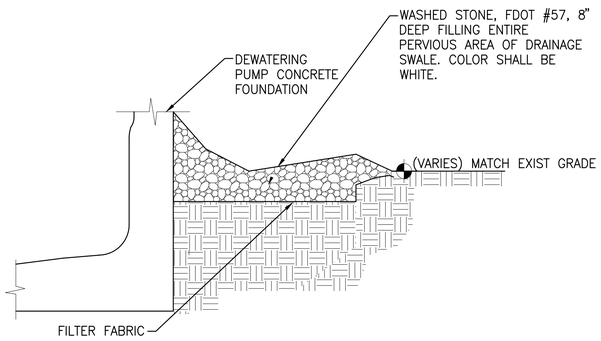

WASHED STONE DETAIL 1
NTS

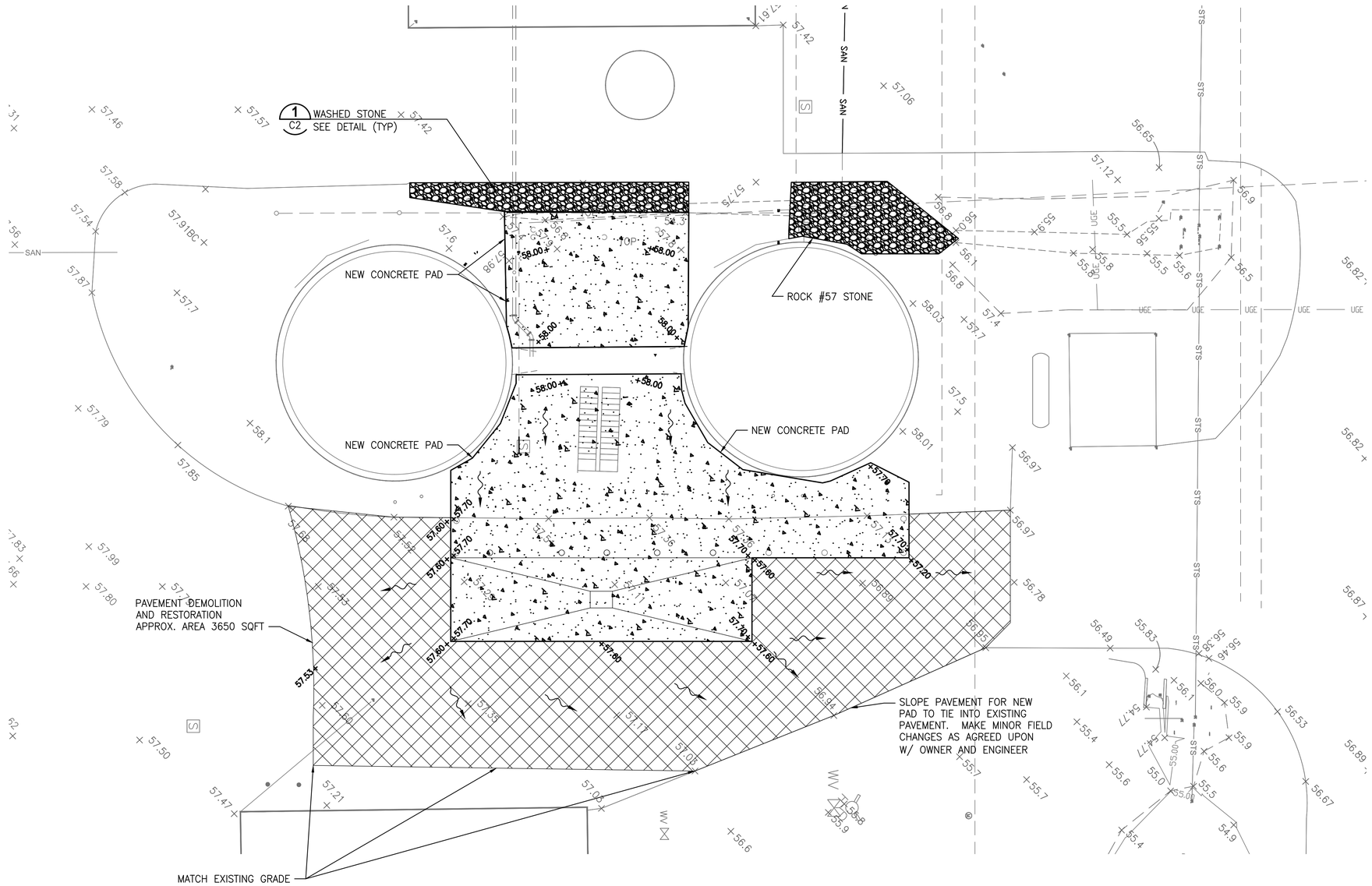

	EXISTING AREA (ACRES)	PROPOSED AREA (ACRES)
BUILDINGS	1.017	1.017
OPEN TANKS/PONDS	4.226	4.226
PAVED/WALKS	4.066	4.101
GREEN SPACE	13.441	13.406
TOTAL	22.750	22.750

1. PER SOUTHWEST FLORIDA WATER MANAGEMENT GUIDELINES, SECTION 6.2.1.(d).2, MODIFICATIONS WILL CAUSE MORE THAN MINOR CHANGES UNDER 62-330.315(2), F.A.C. IF THEY INCREASE PROPOSED IMPERVIOUS AND SEMI-IMPERVIOUS SURFACES BY MORE THAN 10 PERCENT OR 0.5 ACRES, WHICHEVER IS LESS.
2. PROPOSED BLEND TANK CONCRETE PADS AND PROPOSED SLUDGE VALVE STATION DIGESTER CONCRETE PAD REPLACE PERVIOUS SURFACE TOTALS OF APPROXIMATELY 1,521 SQUARE FEET OR JUST UNDER 0.035 ACRES.
3. PERMITTED SURFACE AREAS LISTED ARE BASED ON LATEST CLEARWATER NE WRF ERP DATED APRIL 2012.

BID DOCUMENTS

RECORD DRAWINGS
SURVEYED BY: DRAWN BY:
REVIEWED BY: PROJECT ENGINEER DATE
APPROVED BY: CITY ENGINEERING DIRECTOR TARA KIVETT, P.E. #86611 DATE

REVISION	BY	DATE

CITY OF CLEARWATER, FLORIDA
ENGINEERING DEPARTMENT
100 S. MYRTLE AVE.
CLEARWATER, FL 33756

INVESTIGATE BEFORE YOU EXCAVATE
CALL 811
SUNSHINE STATE ONE CALL OF FLORIDA
www.sunshine811.com
(800) 432-4770
MIN. 48 HOURS BEFORE YOU EXCAVATE

JonesEdmunds
CERTIFICATE OF AUTHORIZATION #1841
730 NE WALDO ROAD, GAINESVILLE, FLORIDA 32641 / (352) 377-5821
324 S HYDE PARK AVE, SUITE 250, TAMPA, FLORIDA 33606 / (813) 258-0703

NE WRF SLUDGE BLEND TANK IMPROVEMENTS
SITE PLAN

DWG NAME: 0372004801-C02.dwg	FIELD BOOK:	SURVEYED BY:	SCALE: VERT.
CONTRACT NO.: 14-0036-UT	DATE DRAWN: AUGUST 2019	DRAWN BY: RWADE	HORIZ. AS NOTED
JOB NO.: 03720-048-01	DESIGNED BY: DYONGE	CHECKED BY: AHOLMES	SHEET NO.: C2

APPROVED FOR CONSTRUCTION
THOMAS W. FRIEDRICH, P.E. # 61281 DATE

NOTES:

1. CONTRACTOR TO COORDINATE WITH SPECIFICATION 01815, MAINTENANCE OF PLANT OPERATION AND SEQUENCE OF CONSTRUCTION.

2. CONTRACTOR TO PROVIDE BYPASS OF DEWATERING PUMPS TO CONSTRUCT IMPROVEMENTS WITHOUT INTERRUPTING PLANT OPERATION.

3. PIPING CONFIGURATION AND ARRANGEMENT IS SHOWN FOR INTENT ONLY. CONTRACTOR TO SUBMIT PROPOSED BYPASS PLAN, ALONG WITH PIPE CONFIGURATION, MATERIALS, PIPE SUPPORTS, AND PROPOSED DISCHARGE INTO DEWATERING BUILDING.

4. CONTRACTOR SHALL PROVIDE ALL TEMPORARY INSTRUMENTATION AND CONTROL TO ELECTRICAL TO OPERATE BYPASS DEWATERING PUMPS PRIOR TO DISCONNECTING DEWATERING TANK PIPING

5. SUCTION PIPING SHALL BE MINIMUM 8" AND DISCHARGE SHALL BE MINIMUM 6".

6. THE CITY TYPICALLY OPERATES THE DEWATERING FEED SYSTEM FROM 5:00 P.M. TO 1:00 A.M. FOR SINGLE LOADS OR FROM 1:00 P.M. TO 5:00 A.M. FOR DOUBLE LOADS MONDAY THROUGH SATURDAY. SATURDAY EVENING THROUGH SUNDAY EVENING ARE THE ONLY TIMES THERE ARE NO DEWATERING ACTIVITIES.

N

GRAPHIC SCALE

0 5 10 20

SCALE IN FEET
1"=10'

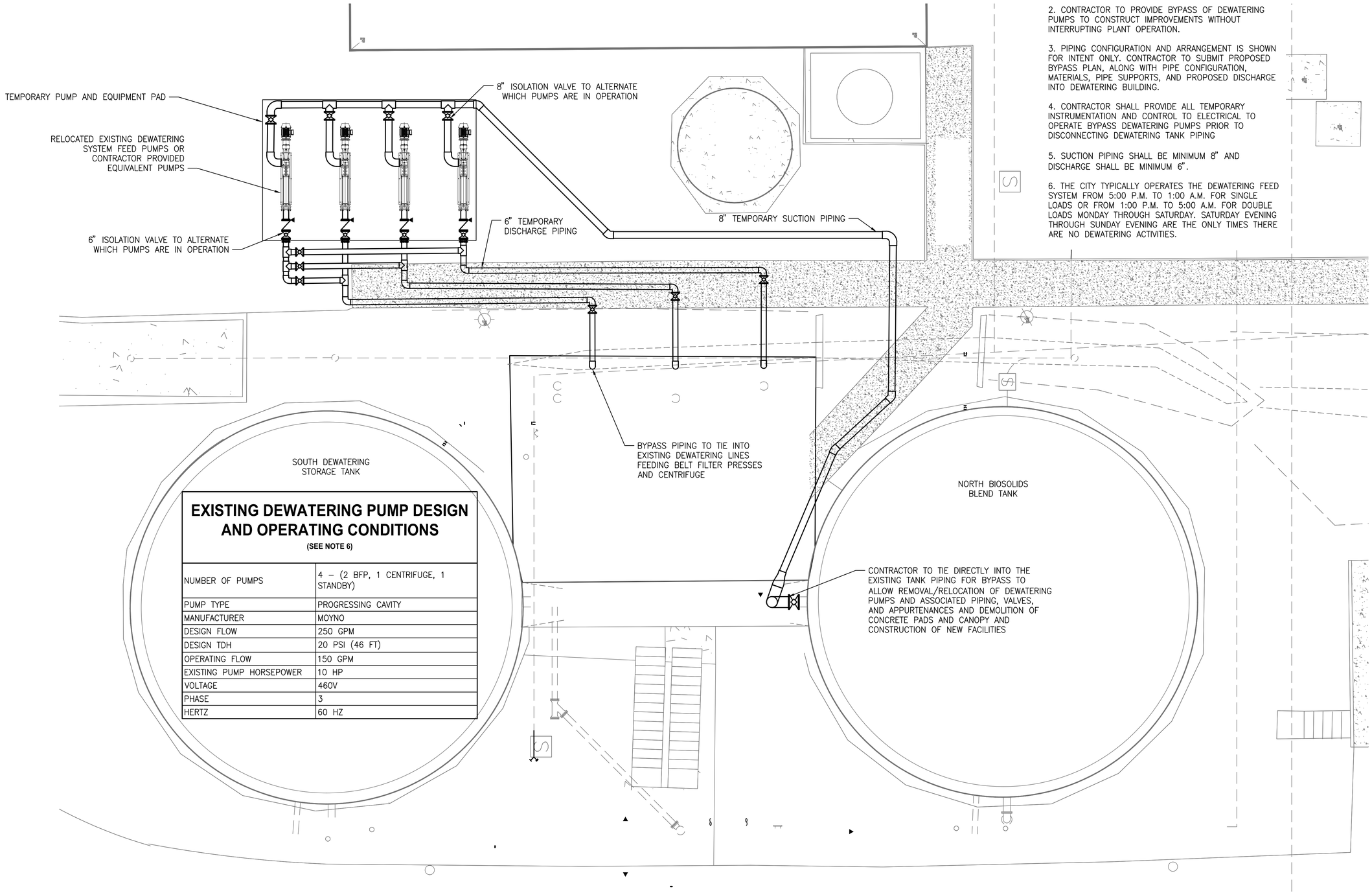

EXISTING DEWATERING PUMP DESIGN AND OPERATING CONDITIONS

(SEE NOTE 6)

NUMBER OF PUMPS	4 – (2 BFP, 1 CENTRIFUGE, 1 STANDBY)
PUMP TYPE	PROGRESSING CAVITY
MANUFACTURER	MOYNO
DESIGN FLOW	250 GPM
DESIGN TDH	20 PSI (46 FT)
OPERATING FLOW	150 GPM
EXISTING PUMP HORSEPOWER	10 HP
VOLTAGE	460V
PHASE	3
HERTZ	60 HZ

BID DOCUMENTS

LAST SAVED: 6/12/2019 8:43 PM JKRAMER DWG LOCATION:\\TPA-MAIN\DRAFTING\03720 CLEARWATER\048-01 NE BLEND TANK IMPROVEMENTS\CONTRACT DRAWINGS\CIVIL\0372004801-C03.DWG

RECORD DRAWINGS
SURVEYED BY: DRAWN BY:
REVIEWED BY: PROJECT ENGINEER DATE
APPROVED BY: CITY ENGINEERING DIRECTOR TARA KIVETT, P.E. #66611 DATE

REVISION BY DATE

CITY OF CLEARWATER, FLORIDA
ENGINEERING DEPARTMENT
100 S. MYRTLE AVE.
CLEARWATER, FL 33756

INVESTIGATE BEFORE YOU EXCAVATE
CALL 811
SUNSHINE STATE ONE CALL OF FLORIDA
www.sunshine811.com
(800) 432-4770
MIN. 48 HOURS BEFORE YOU EXCAVATE

JonesEdmunds
CERTIFICATE OF AUTHORIZATION #1841
730 NE WALDO ROAD, GAINESVILLE, FLORIDA 32641 / (352) 377-5821
324 S HYDE PARK AVE, SUITE 250, TAMPA, FLORIDA 33606 / (813) 258-0703

NE WRF SLUDGE BLEND TANK IMPROVEMENTS
DEWATERING SYSTEM
BY-PASS PIPING PLAN

DWG NAME: 0372004801-C03.dwg	FIELD BOOK:	SURVEYED BY:	SCALE: VERT. HORIZ. AS NOTED
CONTRACT NO.: 14-0036-UT	DATE DRAWN: AUGUST 2019	DRAWN BY: RWADE	
JOB NO.: 03720-048-01	DESIGNED BY: DYONGE	CHECKED BY: AHOLMES	SHEET NO.: C3

APPROVED FOR CONSTRUCTION
THOMAS W. FRIEDRICH, P.E. # 61281 DATE

STORMWATER POLLUTION PREVENTION PLAN

THIS PLAN SHALL BE IN ACCORDANCE WITH THE FLORIDA EROSION AND SEDIMENT CONTROL MANUAL.

SITE DESCRIPTION AND GENERAL INFORMATION

PROJECT NAME AND LOCATION
THIS STORMWATER POLLUTION PREVENTION PLAN INCLUDES SITE IMPROVEMENTS AT THE NORTHEAST WATER RECLAMATION FACILITY. THE SITE IS LOCATED 0.5 MILES NORTHWEST OF THE MCMULLEN–BOOTH RD AND SR 580 INTERSECTION IN SAFETY HARBOR.

OWNER NAME AND ADDRESS

CITY OF CLEARWATER NORTHEAST WATER RECLAMATION FACILITY
3290 STATE ROAD 580 UNIT 1
SAFETY HARBOR, FL

PROJECT DESCRIPTION

THESE MODIFICATIONS WILL NOT INCREASE DISCHARGE FROM THE SITE OR ALTER ANY FLOW PATHS.

SEQUENCE OF MAJOR ACTIVITIES

THE ORDER OF MAJOR ACTIVITIES WILL BE AS FOLLOWS:

1. INSTALL SILT FENCE AS SHOWN ON PLANS.
2. STABILIZE CLEARED AREAS WITHIN 7 DAYS OF LAST DISTURBANCE.
3. COMPLETE GRADING AND INSTALL PERMANENT SODDING.
4. WHEN ALL CONSTRUCTION IS COMPLETE, STABILIZE (E.G. SOD, SEED/MULCH, ETC) ANY REMAINING DISTURBED AREAS.

SUFFICIENT PRECAUTIONS SHALL BE TAKEN TO PREVENT POLLUTION OF STREAMS, CANALS, LAKES, RESERVOIRS, WETLANDS, AND OTHER WATER IMPOUNDMENTS. ALSO, OPERATIONS SHALL BE CONDUCTED AND SCHEDULED SO AS TO AVOID POLLUTION OR SILTATION OF STREAMS, WATER BODIES, ETC.

STORM WATER POLLUTION PREVENTION PLAN
INSPECTION AND MAINTENANCE REPORT FORM

(Inspections must occur at least once a week and within 24 hours of the end of a storm event that is 0.50 inches or greater)

FDEP NPDES Stormwater Identification Number: FLR10_____

Location	Rain Data	Type of Control (see below)	Date Installed/ Modified	Current Condition (see below)	Corrective Action/Other Remarks

Condition Code:
G=Good M=Marginal, needs maintenance or replacement soon P=Poor, needs immediate maintenance or replacement
C=Needs to be cleaned O=Other

Control Type Codes:

1. Silt Fence	10. Storm drain inlet protection	19. Reinforced soil retaining system	28. Tree protection
2. Earth dikes	11. Vegetative buffer strip	20. Gabion	29. Detention pond
3. Structural Diversion	12. Vegetative preservation area	21. Sediment basin	30. Retention pond
4. Swale	13. Retention pond	22. Temporary seed/sod	31. Waste disposal/housekeeping
5. Sediment Trap	14. Construction entrance stabilization	23. Permanent seed/sod	32. Dam
6. Check dam	15. Perimeter ditch	24. Mulch	33. Sand bag
7. Subsurface drain	16. Curb and gutter	25. Hay bales	34. Other
8. Pipe slope drain	17. Paved road surface	26. Geotextile	
9. Level spreaders	18. Rock outlet protection	27. Rip-rap	

Inspector Information:

Name Qualification Date

The above signature also shall certify that this facility is in compliance with the Stormwater Pollution Prevention Plan and the State of Florida Generic Permit for Stormwater Discharge from Large and Small Construction Activities if there are not any incidents of non-compliance identified above.

******

"I certify under penalty of law that this document and all attachments were prepared under my direction or supervision in accordance with a system designed to assure that qualified personnel properly gathered and evaluated the information submitted. Based on my inquiry of the person or persons who manage the system, or those persons directly responsible for gathering the information, the information submitted is, to the best of my knowledge and belief, true, accurate, and complete. I am aware that there are significant penalties for submitting false information, including the possibility of fine and imprisonment for knowing violations."

POLLUTION PREVENTION PLAN CERTIFICATION

I CERTIFY UNDER PENALTY OF LAW THAT THIS DOCUMENT AND ALL ATTACHMENTS WERE PREPARED UNDER MY DIRECTION OR SUPERVISION IN ACCORDANCE WITH A SYSTEM DESIGNED TO ASSURE THAT QUALIFIED PERSONNEL PROPERLY GATHERED AND EVALUATED THE INFORMATION SUBMITTED. BASED ON MY INQUIRY OF THE PERSON OR PERSONS WHO MANAGE THE SYSTEM, OR THOSE PERSONS DIRECTLY RESPONSIBLE FOR GATHERING THE INFORMATION, THE INFORMATION SUBMITTED IS, TO THE BEST OF MY KNOWLEDGE AND BELIEF, TRUE, ACCURATE, AND COMPLETE. I AM AWARE THAT THERE ARE SIGNIFICANT PENALTIES FOR SUBMITTING FALSE INFORMATION, INCLUDING THE POSSIBILITY OF FINE AND IMPRISONMENT FOR KNOWING VIOLATIONS.

CITY OF CLEARWATER PUBLIC UTILITIES
1650 NORTH ARCTURES AVE.
CLEARWATER. FL 33765–1945

SIGNED: _____ PRINT NAME: _____

DATE: _____

CONTRACTOR'S CERTIFICATION

THIS SWPPP MUST CLEARLY IDENTIFY, FOR EACH MEASURE IDENTIFIED WITHIN THE SWPPP, THE CONTRACTOR(S) OR SUBCONTRACTOR(S) THAT WILL IMPLEMENT EACH MEASURE. ALL CONTRACTOR(S) AND SUBCONTRACTOR(S) IDENTIFIED IN THE SWPPP MUST SIGN THE FOLLOWING CERTIFICATION:

"I CERTIFY UNDER PENALTY OF LAW THAT I UNDERSTAND, AND SHALL COMPLY WITH, THE TERMS AND CONDITIONS OF THE STATE OF FLORIDA GENERIC PERMIT FOR STORMWATER DISCHARGE FROM LARGE AND SMALL CONSTRUCTION ACTIVITIES AND THIS STORMWATER POLLUTION PREVENTION PLAN PREPARED THERE UNDER."

SIGNATURE/DATE: _____
NAME: _____

COMPANY NAME: _____
ADDRESS: _____
_____
TELEPHONE NO: _____
RESPONSIBILITY: _____

BID DOCUMENTS

STORMWATER POLLUTION PREVENTION NOTES

1. THE CONTRACTOR SHALL INSTALL FILTER FABRIC OVER ALL DRAINAGE STRUCTURES FOR THE DURATION OF CONSTRUCTION AND UNTIL ACCEPTANCE OF THE PROJECT BY THE OWNER. ALL DRAINAGE STRUCTURES SHALL BE CLEANED OF DEBRIS AS REQUIRED DURING AND AT THE END OF CONSTRUCTION TO PROVIDE POSITIVE DRAINAGE FLOWS.

2. IF DEWATERING IS REQUIRED, THE CONTRACTOR SHALL OBTAIN ANY APPLICABLE REQUIRED PERMITS. THE CONTRACTOR IS TO COORDINATE WITH THE OWNER AND THE DESIGN ENGINEER PRIOR TO ANY EXCAVATION.

3. STRIP TOPSOIL AND ORGANIC MATTER FROM ALL AREAS OF THE SITE AS REQUIRED. IN SOME CASES TOPSOIL MAY BE STOCKPILED ON SITE FOR PLACEMENT WITHIN LANDSCAPED AREAS BUT ONLY AS DIRECTED BY THE OWNER.

4. FIELD DENSITY TESTS SHALL BE TAKEN AT INTERVALS IN ACCORDANCE WITH THE LOCAL JURISDICTIONAL AGENCY OR TO FDOT STANDARDS. IN THE EVENT THAT THE CONTRACT DOCUMENTS AND THE JURISDICTIONAL AGENCY REQUIREMENTS ARE NOT IN AGREEMENT, THE MOST STRINGENT SHALL GOVERN.

5. ALL SLOPES AND AREAS DISTURBED BY CONSTRUCTION SHALL BE GRADED AS PER PLANS. THE AREAS SHALL THEN BE SODDED AS SPECIFIED IN THE PLANS, FERTILIZED, AND MAINTAINED UNTIL HARDY GRASS GROWTH IS ESTABLISHED IN ALL AREAS. ANY AREAS DISTURBED FOR ANY REASON PRIOR TO FINAL ACCEPTANCE OF THE JOB SHALL BE CORRECTED BY THE CONTRACTOR AT NO ADDITIONAL COST TO THE OWNER. ALL EARTHEN AREAS WILL BE SODDED AND MULCHED AS SHOWN ON THE PLANS.

6. ALL CUT OR FILL SLOPES SHALL BE 4 (HORIZONTAL): 1 (VERTICAL) OR FLATTER UNLESS OTHERWISE SHOWN.

7. THE CONTRACTOR SHALL BE RESPONSIBLE FOR THE CONTROL OF DUST AND DIRT RISING AND SCATTERING IN THE AIR DURING CONSTRUCTION AND SHALL PROVIDE WATER SPRINKLING OR OTHER SUITABLE METHODS OF CONTROL. THE CONTRACTOR SHALL COMPLY WITH ALL GOVERNING REGULATIONS PERTAINING TO ENVIRONMENTAL PROTECTION.

8. THE CONTRACTOR SHALL TAKE ALL REQUIRED MEASURES TO CONTROL TURBIDITY, INCLUDING BUT NOT LIMITED TO THE INSTALLATION OF TURBIDITY BARRIERS AT ALL LOCATIONS WHERE THE POSSIBILITY OF TRANSFERRING SUSPENDED SOLIDS INTO THE RECEIVING WATER BODY EXISTS DUE TO THE PROPOSED WORK. TURBIDITY BARRIERS MUST BE MAINTAINED IN EFFECTIVE CONDITION AT ALL LOCATIONS UNTIL CONSTRUCTION IS COMPLETED AND DISTURBED SOIL AREAS ARE STABILIZED. THEREAFTER, THE CONTRACTOR MUST REMOVE THE BARRIERS. AT NO TIME SHALL THERE BE ANY OFF-SITE DISCHARGE WHICH VIOLATES STATE WATER QUALITY STANDARDS.

EROSION AND SEDIMENT TRANSPORT PREVENTION

1. THE WORK SPECIFIED IN THIS SECTION CONSISTS OF MEASURES REQUIRED TO CONTROL EROSION AND TRANSPORT OF SEDIMENTS WITHIN AND FROM THE PROJECT AREA, SO AS TO PREVENT THE DEGRADATION OF RECEIVING WATERS, DETRIMENTAL EFFECTS ON PUBLIC OR PRIVATE PROPERTY ADJACENT TO THE PROJECT AND DAMAGE WITHIN THE PROJECT AREA. THESE MEASURES WILL INCLUDE THE CONSTRUCTION AND MAINTENANCE OF TEMPORARY AND PERMANENT EROSION CONTROLS.

2. CONSTRUCTION OPERATIONS SHALL BE RESTRICTED TO THOSE AREAS WHERE IT IS NECESSARY TO PERFORM FILLING OR EXCAVATION TO ACCOMPLISH THE WORK SHOWN ON THE DRAWINGS AND TO THOSE AREAS WHICH MUST BE ENTERED TO CONSTRUCT TEMPORARY OR PERMANENT STRUCTURES. AS SOON AS THE CONDITIONS WILL PERMIT, RIVERS, STREAMS, IMPOUNDMENT, STORMWATER STORAGE AND CONVEYANCE SYSTEMS AND ANY ONSITE RECEIVING WATER BODIES SHALL BE PROMPTLY CLEARED OF ALL OBSTRUCTIONS PLACED THEREIN OR CAUSED BY CONSTRUCTION OPERATIONS. RUNOFF FROM UNSTABILIZED AREAS SHALL BE DIRECTED TO EITHER THE OFFSITE POND OR TREATED THROUGH SILT FENCES BEFORE DISCHARGING FROM THE PROPERTY.

EROSION PRACTICES

1. PERMANENT EROSION CONTROL FEATURES SHALL BE INCORPORATED INTO THE PROJECT AT THE EARLIEST PRACTICAL TIME. TEMPORARY CONTROL FEATURES WILL BE USED TO CORRECT CONDITIONS THAT DEVELOP DURING CONSTRUCTION WHICH WERE NOT FORESEEN AT THE TIME OF DESIGN TO CONTROL EROSION PRIOR TO THE TIME IT IS PRACTICAL TO CONSTRUCT PERMANENT CONTROL FEATURES.

2. TEMPORARY EROSION CONTROL MAY BE USED IN CONTROLLING EROSION IN AREAS WHERE CONDITIONS NOT UNDER THE CONTROL OF THE CONTRACTOR, PRECLUDE COMPLETION OF A SECTION OF A PROJECT IN A CONTINUOUS MANNER, AND FOR CONTROLLING EROSION IN AREAS WHERE CONSTRUCTION OPERATIONS MUST BE PERFORMED SUBSEQUENTLY THAT WILL CAUSE DAMAGE TO PERMANENT EROSION CONTROL FEATURES. TEMPORARY EROSION AND WATER POLLUTION CONTROL FEATURES SHALL CONSIST OF, BUT NOT BE LIMITED TO, GRASS, TEMPORARY MULCHING, SANDBAGGING, SEDIMENT BASINS, SEDIMENT CHECKS/EARTH DITCH CHECKS, BERMS, FLOATING TURBIDITY BARRIERS, HAY BALES AND SILT FENCE.

STABILIZATION PRACTICES

1. TEMPORARY STABILIZATION – SOIL STOCK PILES AND DISTURBED PORTIONS OF THE SITE WHERE CONSTRUCTION ACTIVITY TEMPORARILY CEASES FOR AT LEAST 21 DAYS WILL BE STABILIZED WITHIN 7 DAYS FROM THE LAST CONSTRUCTION ACTIVITY IN THAT AREA. THESE AREAS SHALL BE STABILIZED WITH TEMPORARY SEED AND MULCH. THE SURFACE AREAS OF UNPROTECTED ERODIBLE EARTH EXPOSED BY CLEARING AND GRUBBING, EXCAVATION OR FILLING OPERATIONS SHALL BE KEPT TO A MINIMUM AS PRACTICAL.

2. PERMANENT STABILIZATION – ALL DISTURBED PORTIONS OF THE SITE WHERE CONSTRUCTION ACTIVITIES HAVE PERMANENTLY CEASED WILL BE STABILIZED BY SOD OR SEED AND MULCH IN ACCORDANCE WITH THE LANDSCAPING PLANS AND/OR CONSTRUCTION PLANS.

STRUCTURAL PRACTICES

1. STAKED SILT SCREENS – WILL BE INSTALLED ACCORDING TO THE PLANS TO PROTECT OFFSITE AREAS FROM ANY POSSIBLE ADVERSE EFFECTS FROM SEDIMENTS. SEDIMENT WILL BE REMOVED FROM THE UPSTREAM SIDE OF ANY SILT SCREEN ONCE THE ACCUMULATED SEDIMENT REACHES 1/3 THE HEIGHT OF THE SILT SCREEN. ANY SEDIMENT DEPOSITS OR SOIL DISTURBANCE CREATED DURING THE INSTALLATION AND REMOVAL OF SILT SCREEN SHALL BE DRESSED TO CONFORM TO THE FINISHED GRADE. THE SILT SCREEN SHALL BE INSPECTED ALONG WITH THE REST OF THE PROJECT ONCE EVERY SEVEN DAYS OR WITHIN 24 HOURS OF A RAINFALL EVENT EXCEEDING 0.5". WHERE DEFICIENCIES EXIST, ADDITIONAL SILT FENCES SHALL BE INSTALLED OR REPLACED. ATTACHMENT OF SILT SCREEN TO EXISTING TREES WILL NOT BE PERMITTED UNLESS APPROVED BY THE PROJECT ENGINEER.

   NOTE: THE FOLLOWING CONTROLS CONCERN DAY-TO-DAY ACTIVITIES ON THE SITE. THE SITE SUPERINTENDENT IS RESPONSIBLE FOR SEEING THAT THEY ARE CARRIED OUT APPROPRIATELY.

WASTE DISPOSAL

1. WASTE MATERIALS – ALL WASTE MATERIALS WILL BE COLLECTED AND STORED IN METAL DUMPSTERS AND THEN HAULED TO AN APPROVED DISPOSAL SITE. THE DUMPSTERS WILL MEET ALL COUNTY AND STATE SOLID WASTE MANAGEMENT REGULATIONS. ALL TRASH AND CONSTRUCTION DEBRIS FROM THE SITE WILL BE DEPOSITED IN THE DUMPSTER. NO CONSTRUCTION WASTE WILL BE BURIED ON THE SITE. ALL PERSONNEL WILL BE INSTRUCTED IN THE CORRECT PROCEDURE FOR WASTE DISPOSAL. EMPLOYEE WASTE AND OTHER LOOSE MATERIALS, E.G., CUPS, CANS, BAGS, ETC., WILL BE COLLECTED SO AS TO PREVENT THE RELEASE OF "FLOATABLES" DURING RUNOFF EVENTS.

2. HAZARDOUS WASTE – ALL HAZARDOUS WASTE MATERIALS WILL BE DISPOSED OF IN THE MANNER SPECIFIED BY LOCAL OR STATE REGULATIONS, OR BY THE MANUFACTURER.

3. SANITARY WASTE – ALL SANITARY WASTE WILL BE COLLECTED FROM THE PORTABLE UNITS IN A TIMELY MANNER MEETING ALL LOCAL AND STATE REGULATIONS.

OFFSITE VEHICLE TRACKING

1. MONITORING OF OFFSITE TRACKING OF SEDIMENTS AT THE ENTRANCES IS ESSENTIAL WHERE SILT FENCE WILL NOT BE PLACED TO ENABLE ACCESS TO THE SITE. IF IT APPEARS THAT SIGNIFICANT AMOUNTS OF SEDIMENT ARE BEING TRACKED OFF THE SITE, GRAVEL ENTRANCES OR OTHER EQUIVALENT MEASURES ARE RECOMMENDED TO HELP DISLODGE THE SOIL, SEDIMENT AND DIRT BEFORE THE VEHICLES LEAVE THE SITE.

TIMING OF CONTROL MEASURES

1. AREAS WHERE THE GROUND HAS BEEN DISTURBED AND CONSTRUCTION ACTIVITIES TEMPORARILY WILL CEASE FOR MORE THAN 21 DAYS SHALL BE STABILIZED WITH A TEMPORARY SEED AND MULCH WITHIN 7 DAYS OF THE LAST DISTURBANCE. ONCE CONSTRUCTION ACTIVITY CEASES PERMANENTLY IN AN AREA WHERE THE GROUND HAS BEEN DISTURBED, THAT AREA WILL BE STABILIZED WITH SOD OR OTHER SUITABLE STABILIZATION MATERIALS. AFTER THE SITE IS STABILIZED, ALL EXCESS SEDIMENTS AND DEBRIS WILL BE REMOVED FROM THE PONDS AND STORMWATER CONVEYANCE SYSTEM/STRUCTURES RECEIVING DIRECT RUNOFF FROM THE AREA.

BID DOCUMENTS

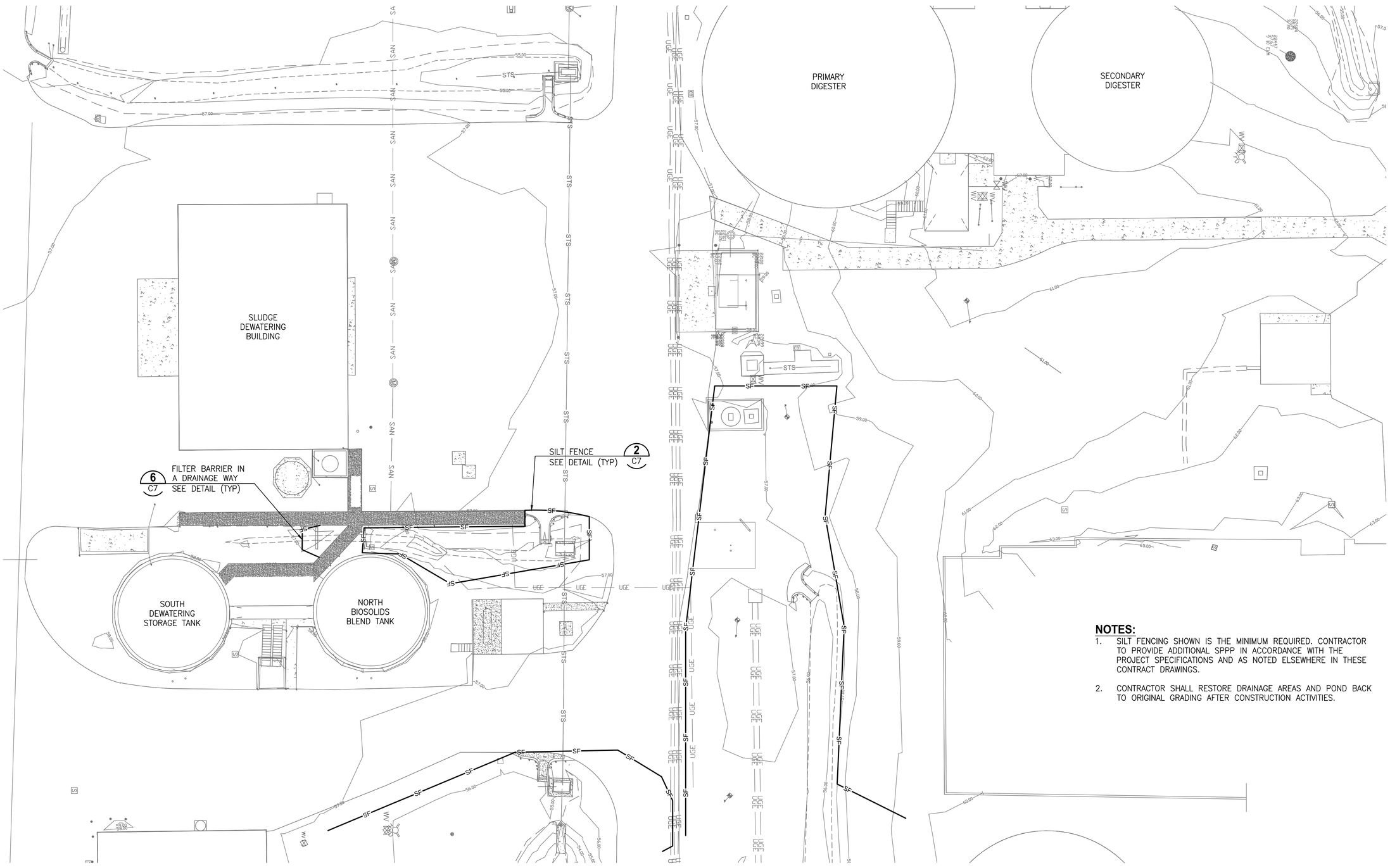

NOTES:

1. SILT FENCING SHOWN IS THE MINIMUM REQUIRED. CONTRACTOR TO PROVIDE ADDITIONAL SPPP IN ACCORDANCE WITH THE PROJECT SPECIFICATIONS AND AS NOTED ELSEWHERE IN THESE CONTRACT DRAWINGS.
2. CONTRACTOR SHALL RESTORE DRAINAGE AREAS AND POND BACK TO ORIGINAL GRADING AFTER CONSTRUCTION ACTIVITIES.

STORMWATER POLLUTION PREVENTION PLAN

1" =200'

BID DOCUMENTS

LAST SAVED: 8/16/2019 9:22 AM RMEADOWS DWG LOCATION:\\TPA-MAIN\DRAFTING\03720 CLEARWATER\048-01 NE BLEND TANK IMPROVEMENTS\CONTRACT DRAWINGS\CIVIL\0372004801-C06.DWG

RECORD DRAWINGS	
SURVEYED BY:	DRAWN BY:
REVIEWED BY:	
PROJECT ENGINEER	DATE
APPROVED BY:	
CITY ENGINEERING DIRECTOR TARA KIVETT, P.E. #66611	DATE

REVISION	BY	DATE

CITY OF CLEARWATER, FLORIDA
ENGINEERING DEPARTMENT
100 S. MYRTLE AVE.
CLEARWATER, FL 33756

INVESTIGATE BEFORE YOU EXCAVATE
CALL 811
SUNSHINE STATE ONE CALL OF FLORIDA
www.sunshine811.com
(800) 432-4770
MIN. 48 HOURS BEFORE YOU EXCAVATE

JonesEdmunds
CERTIFICATE OF AUTHORIZATION #1841
730 NE WALDO ROAD, GAINESVILLE, FLORIDA 32641 / (352) 377-5821
324 S HYDE PARK AVE, SUITE 250, TAMPA, FLORIDA 33606 / (813) 258-0703

NE WRF SLUDGE BLEND TANK IMPROVEMENTS
STORMWATER POLLUTION PREVENTION PLAN

DWG NAME: 0372004801-C06.dwg	FIELD BOOK:	SURVEYED BY:	SCALE: VERT.
CONTRACT NO.: 14-0036-UT	DATE DRAWN: AUGUST 2019	DRAWN BY: RWADE	HORIZ. AS NOTED
JOB NO.: 03720-048-01	DESIGNED BY: DYONGE	CHECKED BY: AHOLMES	SHEET NO.: C6
APPROVED FOR CONSTRUCTION	THOMAS W. FRIEDRICH, P.E. # 61281		DATE

1. SET THE STAKES.

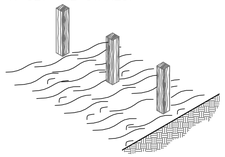

2. EXCAVATE A 4 INCH x 4 INCH TRENCH UPSLOPE ALONG THE LINE OF STAKES.

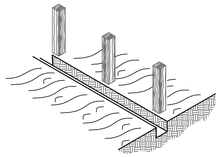

3. STAPLE FILTER MATERIAL TO STAKES AND EXTEND IT INTO THE TRENCH.

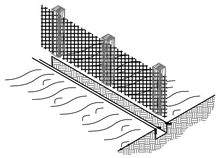

4. BACKFILL AND COMPACT THE EXCAVATED SOIL.

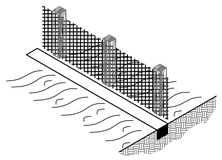

CONSTRUCTION OF A FILTER BARRIER (1)

NTS

1. SET POSTS AND EXCAVATE A 4-INCH X 4-INCH TRENCH UPSLOPE ALONG THE LINE OF POSTS.

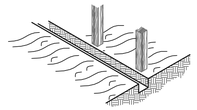

2. STAPLE WIRE FENCING TO THE POSTS.

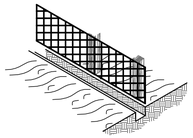

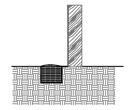

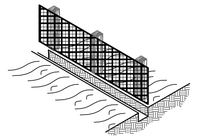

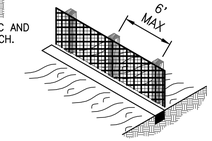

3. ATTACH THE FILTER FABRIC TO THE WIRE FENCE AND EXTEND IT INTO THE TRENCH.

4. BACKFILL AND COMPACT THE EXCAVATED SOIL.

CONSTRUCTION OF SILT FENCE (2)

NTS

1. EXCAVATE THE TRENCH.

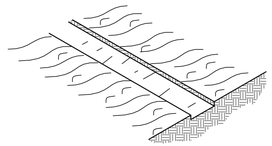

2. PLACE AND STAKE STRAW BALES.

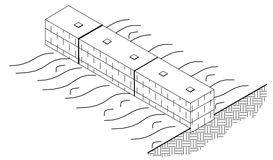

3. WEDGE LOOSE STRAW BETWEEN BALES.

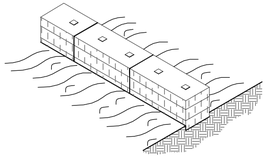

4. BACKFILL AND COMPACT THE EXCAVATED SOIL.

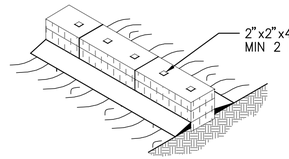

CONSTRUCTION OF A STRAW BALE BARRIER (3)

NTS

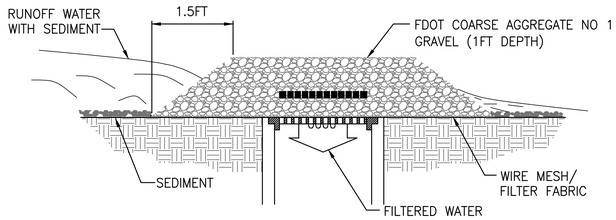

GRAVEL AND WIRE MESH DROP INLET SEDIMENT FILTER (4)

NTS

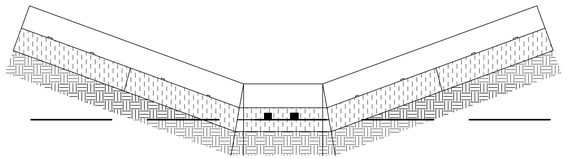

PROPER PLACEMENT OF STRAW BALE IN A DRAINAGE WAY (5)

NTS

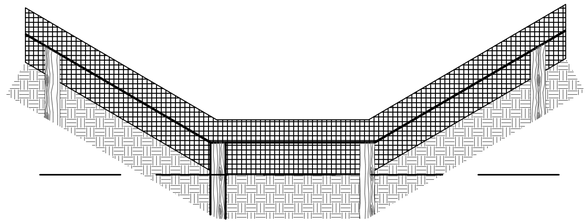

PROPER PLACEMENT OF A FILTER BARRIER IN A DRAINAGE WAY (6)

NTS

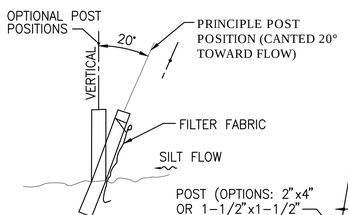

SECTION

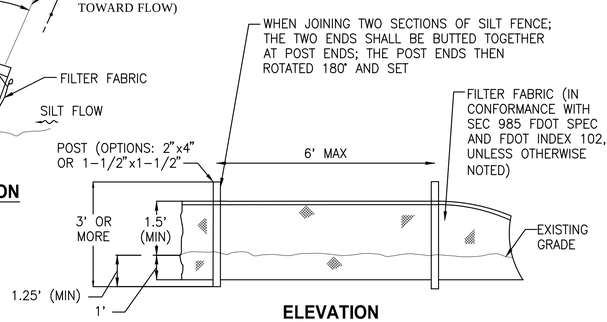

ELEVATION

TYPICAL SILT FENCE DETAIL (7)

NTS

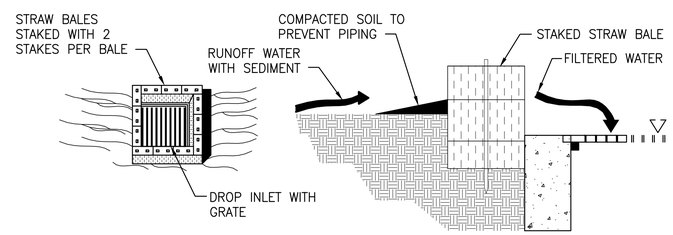

SPECIFIC APPLICATION

THIS METHOD OF INLET PROTECTION IS APPLICABLE WHERE THE INLET DRAINS A RELATIVELY FLAT AREA (SLOPES NO GREATER THAN 5%) WHERE SHEET OR OVERLAND FLOWS (NOT EXCEEDING 0.15 CMS) ARE TYPICAL. THE METHOD SHALL NOT APPLY TO INLETS RECEIVING CONCENTRATED FLOWS, SUCH AS IN STREET OR HIGHWAY MEDIANS.

STRAW BALE DROP INLET SEDIMENT FILTER (8)

NTS

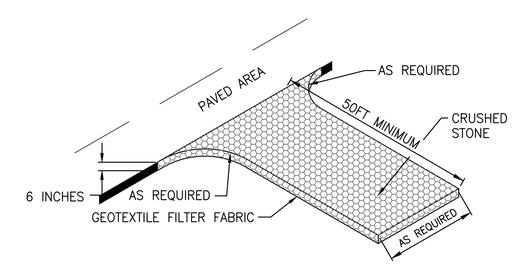

STABILIZED CONSTRUCTION ENTRANCE (9)

NTS

BID DOCUMENTS

LAST SAVED: 6/12/2019 8:42 PM CAUTODESK DWG LOCATION:\\TPA-MAIN\DRAFTING\03720 CLEARWATER\048-01 NE BLEND TANK IMPROVEMENTS\CONTRACT DRAWINGS\CIVIL\0372004801-C07.DWG

RECORD DRAWINGS

SURVEYED BY: | DRAWN BY:

REVIEWED BY: PROJECT ENGINEER DATE

APPROVED BY: CITY ENGINEERING DIRECTOR TARA KIVETT, P.E. #86611 DATE

REVISION	BY	DATE

CITY OF CLEARWATER, FLORIDA
ENGINEERING DEPARTMENT
100 S. MYRTLE AVE.
CLEARWATER, FL 33756

INVESTIGATE BEFORE YOU EXCAVATE
CALL 811
SUNSHINE STATE ONE CALL OF FLORIDA
www.sunshine811.com
(800) 432-4770
MIN. 48 HOURS BEFORE YOU EXCAVATE

JonesEdmunds
CERTIFICATE OF AUTHORIZATION #1841
730 NE WALDO ROAD, GAINESVILLE, FLORIDA 32641 / (352) 377-5821
324 S HYDE PARK AVE, SUITE 250, TAMPA, FLORIDA 33606 / (813) 258-0703

NE WRF SLUDGE BLEND TANK IMPROVEMENTS
CIVIL DETAILS

DWG NAME: 0372004801-C07.dwg	FIELD BOOK:	SURVEYED BY:	SCALE: VERT. HORIZ. NONE
CONTRACT NO.: 14-0036-UT	DATE DRAWN: AUGUST 2019	DRAWN BY: RWADE	
JOB NO.: 03720-048-01	DESIGNED BY: DYONGE	CHECKED BY: AHOLMES	SHEET NO.: C7

APPROVED FOR CONSTRUCTION
THOMAS W. FRIEDRICH, P.E. # 61281 DATE

GENERAL STRUCTURAL NOTES

GENERAL CONDITIONS

1. ALL STRUCTURAL DRAWINGS SHALL BE USED IN CONJUNCTION WITH THE MECHANICAL, CIVIL, ARCHITECTURAL, ELECTRICAL, HVAC, PLUMBING AND SHOP DRAWINGS AND SPECIFICATIONS.
2. THE CONTRACTOR SHALL REVIEW AND VERIFY DIMENSIONS SHOWN IN ALL PLANS AND REVIEW ALL FIELD CONDITIONS THAT MAY AFFECT THE WORK DEPICTED ON THE DRAWINGS. SHOULD DISCREPANCIES APPEAR, THE CONTRACTOR SHALL NOTIFY THE ENGINEER IN WRITING TO OBTAIN ENGINEER'S CLARIFICATION BEFORE COMMENCING WITH THE WORK.
3. FOR ALL ITEMS EMBEDDED IN OR PASSING THROUGH CONCRETE, THE CONTRACTOR SHALL INITIALLY REFER TO MECHANICAL, HVAC, AND PLUMBING DRAWINGS FOR TYPE, SIZE, LOCATION, AND SPECIAL INSTALLATION REQUIREMENTS FOR THESE ITEMS.
4. THE CONTRACTOR SHALL TAKE ALL NECESSARY MEASURES TO PROTECT EXISTING STRUCTURES FROM DAMAGE WHEN WORKING IN AND AROUND EXISTING STRUCTURES PERFORMING WORK SUCH AS DEMOLITION, FOUNDATION EXCAVATIONS, AND OTHERS.
5. SIZE AND LOCATION OF EQUIPMENT PADS AND ANCHOR BOLTS SHALL BE PER EQUIPMENT MANUFACTURER'S REQUIREMENTS.
6. ANY CONSTRUCTION EQUIPMENT THAT MAY INDUCE VIBRATION TO THE STRUCTURE SHALL BE ADEQUATELY ISOLATED FROM THE STRUCTURE.
7. ALL DETAILS AND SECTIONS SHOWN ON THE DRAWINGS ARE INTENDED TO BE TYPICAL AND SHALL BE CONSTRUED TO APPLY TO ANY SIMILAR SITUATION ELSEWHERE ON THE PROJECT, EXCEPT WHERE A DIFFERENT DETAIL IS SHOWN.
8. STANDARD DETAILS APPLY TO ALL SIMILAR SITUATIONS ON THE PROJECT EXCEPT WHERE A DIFFERENT DETAIL IS SHOWN.

DESIGN CRITERIA

BUILDING CODES AND REFERENCES:

1. 2017 FLORIDA BUILDING CODE (FBC) SIXTH EDITION
2. REINFORCED CONCRETE:

   WATER RETAINING ENVIRONMENTAL STRUCTURES: ACI 350-06 "CODE REQUIREMENTS FOR ENVIRONMENTAL ENGINEERING CONCRETE STRUCTURES"

   ALL OTHER STRUCTURES: ACI 318-14 "BUILDING CODE REQUIREMENTS FOR STRUCTURAL CONCRETE"
3. STRUCTURAL STEEL: AISC MANUAL OF STEEL CONSTRUCTION 14TH EDITION
4. ALUMINUM: ADM1-2010, ALUMINUM DESIGN MANUAL
5. LIVE LOADS:

   -PROCESS RELATED STRUCTURES:

WALKWAYS, STAIRWAYS AND LANDINGS:	100 PSF
ELEVATED SLABS AT PROCESS AREAS:	200 PSF
SLABS ON GRADE	300 PSF
6. WIND DESIGN CRITERIA:

RISK CATEGORY	III
ULTIMATE DESIGN WIND SPEED, V_{ULT}	156 MPH
NOMINAL DESIGN WIND SPEED, V_{ASD}	127 MPH
EXPOSURE CATEGORY	C

FOUNDATIONS

FOUNDATION DESIGN:

1. ALLOWABLE BEARING PRESSURE FOR MAT SLAB: 2,000 PSF

CONCRETE (CAST-IN-PLACE)

1. ALL MATERIALS AND METHODS OF CONSTRUCTION SHALL BE IN ACCORDANCE WITH ACI 318 REQUIREMENTS.
2. ALL CONCRETE SHALL BE AIR-ENTRANED WITH A MINIMUM OF 4,000 PSI COMPRESSIVE STRENGTH AT 28 DAYS UNLESS OTHERWISE NOTED.
3. WATER REDUCING AGENT SHALL BE IN ACCORDANCE WITH ASTM C494.
4. ALL CONCRETE SURFACES EXPOSED TO AIR, UNLESS OTHERWISE NOTED IN THE SPECIFICATIONS, SHALL BE TREATED WITH AN APPROPRIATE CURING COMPOUND AS SOON AS FINISHING IS COMPLETED OR FORMS ARE REMOVED.
5. ALL EXPOSED CORNERS SHALL HAVE A MINIMUM CHAMFER OF 3/4" UNLESS OTHERWISE NOTED.
6. THE CONTRACTOR SHALL OBTAIN ENGINEER'S APPROVAL FOR THE LOCATIONS OF CONSTRUCTION JOINTS THAT ARE NOT SHOWN ON THE DRAWINGS.

REINFORCING STEEL

1. REINFORCEMENT SHALL CONFORM TO ASTM A615, GRADE 60 REQUIREMENTS. WELDED WIRE FABRIC SHALL CONFORM TO ASTM A315 REQUIREMENTS. ALL ACCESSORIES SHALL BE IN CONFORMANCE WITH ACI 315 REQUIREMENTS.
2. REINFORCING STEEL SHALL HAVE THE FOLLOWING CLEAR COVER UNLESS OTHERWISE NOTED:

   a. CONCRETE CAST AGAINST EARTH 3"

   b. FORMED SURFACES 2"
3. LAP SPLICES SHALL BE AS SHOWN ON THE DRAWINGS. FOR LAP SPLICES NOT SHOWN ON THE DRAWINGS, THE CONTRACTOR SHALL OBTAIN ENGINEERS APPROVAL.
4. THE CONTRACTOR SHALL PREPARE PLACING DRAWINGS AND SCHEDULES IN CONFORMANCE WITH ACI 315 REQUIREMENTS.
5. UNLESS OTHERWISE NOTED, THE MINIMUM REINFORCING FOR WALLS AND SLABS SHALL BE AS FOLLOWS.

MINIMUM REINFORCING						
THICKNESS	6"	8"	10"	12" - 16"	18" - 22"	24"
REINF. EACH WAY	#4 @ 12"	#5 @12"	#5 @ 12"	#5 @ 12"	#6 @ 12"	#7 @ 12"
LOCATION	CTR	CTR	EF	EF	EF	EF

ALUMINUM

1. ALUMINUM DESIGN, DETAILING, FABRICATION, AND ERECTION SHALL CONFORM TO THE LATEST EDITION OF THE ALUMINUM DESIGN MANUAL.
2. ALUMINUM IN CONTACT WITH OR EMBEDDED IN CONCRETE OR MASONRY SURFACES SHALL BE COATED WITH A HEAVY COATING OF ALKALI RESISTANCE BITUMINOUS PAINT.
3. ALL BOLTS USED IN CONNECTIONS WITH ALUMINUM MEMBERS SHALL BE STAINLESS STEEL A316, UNLESS NOTED OTHERWISE.
4. ALL WELDING OF ALUMINUM STRUCTURES SHALL CONFORM TO "STRUCTURAL WELDING CODE - ALUMINUM", AWS D1.2, LATEST EDITION.

STAINLESS STEEL

1. STAINLESS STEEL PLATES, SHEETS AND STRUCTURAL SHAPES SHALL BE IN ACCORDANCE TO ASTM A240.
2. STAINLESS STEEL MATERIALS SHALL BE AS FOLLOWS UNLESS NOTED OTHERWISE:

   a. EXTERIOR AND SUBMERGED USE: TYPE 316 TYPE 316L (WHERE WELDED)

   b. INTERIOR AND ARCHITECTURAL USE : TYPE 304 TYPE 304L (WHERE WELDED)
3. ALL WELDING OF STRUCTURAL STAINLESS STEEL SHALL CONFORM TO "STRUCTURAL WELDING CODE - STAINLESS STEEL", AWS D1.6, LATEST EDITION.
4. STAINLESS STEEL BOLTS, NUTS AND WASHERS SHALL BE TYPE 316 IN ACCORDANCE TO ASTM F593 UNLESS NOTED OTHERWISE.

WATERTIGHTNESS OF REINFORCED CONCRETE WATER RETAINING STRUCTURES

1. HYDROSTATICALLY TEST REINFORCED CONCRETE STRUCTURES WHICH WILL CONTAIN WATER PER SPECIFICATIONS AND IN ACCORDANCE TO ACI 350.1-TIGHTNESS TESTING OF ENVIRONMENTAL ENGINEERING STRUCTURES. ALL REPAIRS AND RETESTING OF TANKS SHALL BE ACCOMPLISHED AT NO ADDITIONAL COST TO THE OWNER.

PRE-ENGINEERED ALUMINUM CANOPY

GENERAL:

FURNISH ALL LABOR, MATERIALS, EQUIPMENT AND INCIDENTALS REQUIRED TO DESIGN, FABRICATE, DELIVER TO JOB SITE AND ERECT THE PRE-ENGINEERED CANOPY AS NOTED AND SHOWN ON THE DRAWINGS.

THE PRE-ENGINEERED CANOPY SHALL CONSIST OF A ROOF DECK, POSTS, BASE PLATES, GUTTERS, DOWNSPOUTS, BEAMS, FLASHING, AND OTHER MISCELLANEOUS FRAMING. CONTRACTOR SHALL BE RESPONSIBLE FOR COORDINATING ALL PLAN DIMENSIONS WITH PRE-ENGINEERED CANOPY DIMENSIONS AND RESOLVING DIMENSIONS AND SPATIAL CONFLICTS WITH EXISTING PIPING, GUARDRAIL, AND CANOPY PRIOR TO SECURING MATERIALS.

DESIGN AND FABRICATION REQUIREMENTS

DESIGN, FABRICATION, MATERIALS AND WORKMANSHIP SHALL BE IN ACCORDANCE WITH LATEST ALUMINUM DESIGN MANUAL, ERECT CANOPY IN ACCORDANCE WITH MANUFACTURER'S INSTALLATION INSTRUCTIONS.

CANOPY SHALL BE DESIGNED BY A STATE OF FLORIDA REGISTERED ENGINEER RETAINED BY THE MANUFACTURER IN COMPLIANCE WITH BUILDING CODE REQUIREMENTS AND FOR WIND SPEED AS SPECIFIED ON THIS SHEET. DETAILED SIGNED AND SEALED SHOP DRAWINGS SHALL BE SUBMITTED FOR ENGINEER'S REVIEW. DEFLECTION SHALL BE LIMITED TO L/180 FOR ROOF MEMBERS (WIND OR LIVE). LATERAL DRIFT SHALL BE LIMITED TO H/60 (WIND) . DESIGN AND DETAIL STRUCTURE FOR THERMAL EXPANSION AND CONTRACTION.

SPECIALTY ENGINEER TO PREPARE COMPLETE STRUCTURAL DESIGN CALCULATIONS FOR CANOPY MEMBERS EXCEPT CANOPY ANCHORAGE. PROVIDE REACTIONS AS REQUIRED FOR ANCHORAGE DESIGN BY THE ENGINEER OF RECORD.

THE FABRICATOR SHALL DESIGN AND DETAIL ALL PARTS OF CONNECTIONS NOT FULLY DETAILED ON THE DESIGN DRAWINGS. THE NUMBER OF FASTENERS AND OTHER SIMILAR ELEMENTS WHEN SHOWN ON THE DRAWINGS ARE PICTORIAL ONLY.

ALL WELDING TO BE DONE BY HELI-ARC PROCESS.

USE SECTIONS TRUE TO DETAILS WITH CLEAN, STRAIGHT, SHARPLY DEFINED PROFILES AND SMOOTH SURFACES OF UNIFORM COLOR AND TEXTURES, FREE FROM DEFECTS IMPAIRING STRENGTH AND DURABILITY.

METAL ROOF SHALL BE FORMED OR EXTRUDED ALUMINUM SHAPES, INTERLOCKING SELF-FLASHING SECTIONS. SHOP FABRICATE TO LENGTHS AND PANEL WIDTHS REQUIRED FOR FIELD ASSEMBLY. DEPTH OF SECTION TO COMPLY WITH STRUCTURAL REQUIREMENTS.

PROVIDE REMOVABLE ROOF ACCESS HATCHES WHERE SHOWN ON PLAN. COORDINATE OVERALL SIZE AND LOCATION OF ACCESS HATCHES WITH LOCATION OF PUMPS TO BE REMOVED. ACCESS HATCHES SHALL BE WATERTIGHT AND FULLY DESIGNED ON SHOP DRAWINGS.

SHOP AND ERECTION DRAWINGS SHALL BE SUBMITTED TO THE ENGINEER FOR REVIEW PRIOR TO FABRICATION.

NUMBER CODE COMPONENTS FOR EASE OF FIELD INSTALLATION.

SUBMIT COLOR CHARTS OF COLORS AVAILABLE FOR POST, TRIM, AND ROOF PANELS, HOWEVER, CONTRACTOR TO INCLUDE THE COST TO CUSTOM COLOR MATCH OWNERS' PREFERRED COLOR.

MATERIALS:

- ALUMINUM EXTRUSIONS: 6063 ALLOY, T-6 TEMPER
- DECK SCREWS: NO. 14x1 INCH (25MM), SELF-TAPPING, TYPE 18-8 STAINLESS STEEL WITH NEOPRENE WASHER.
- TRIM SCREWS: NO. 10x1/2 INCH (13MM), SELF-TAPPING, TYPE 18-8 STAINLESS STEEL.
- RIVETS TO BE SIZE 3/16" BY 1/2" GRIP RANGE ALUMINUM RIVETS WITH ALUMINUM MANDREL.
- OTHER FASTENERS: TYPE 18-8 STAINLESS STEEL, FASTENER TYPE AS RECOMMENDED BY MANUFACTURER FOR SPECIFIC CONDITIONS.
-
- ALL BOLTS, NUTS AND WASHERS TO BE 18-8 NON-MAGNETIC STAINLESS STEEL.
- TEK SCREWS WILL NOT BE PERMITTED

FINISH:

1. FINISH DESIGNATION PREFIXED BY 'AA' COMPLY WITH SYSTEM ESTABLISHED BT THE ALUMINUM ASSOCIATED FOR DESIGNATION ALUMINUM FINISHES.
2. MECHANICAL FINISH: AA-M12 (MECHANICAL FINISH: NONSPECULAR AS FABRICATED)
3. CLASS I, CLEAR ANODIC FINISH: AA-M12C22A41 (MECHANICAL FINISH, NONSPECULAR AS FABRICATED; CHEMICAL FINISH: ETCHED, MEDIUM MATTE; ANODIC COATING: ARCHITECTURAL CLASS I, CLEAR COATING 0.018MM OR THICKER) COMPLYING WITH AAMA 607.1.

INSTALLATION:

1. ALUMINUM CANOPY MANUFACTURER SHALL PERFORM INSTALLATION UTILIZING FULL-TIME CONSTRUCTION DIVISION PERSONNEL. SUBLETTING OF INSTALLATION IS NOT ACCEPTABLE.
2. WHERE METAL SURFACES COME IN CONTACT WITH NON-COMPATIBLE METALS, KEEP SURFACES FROM DIRECT CONTACT BY USE OF A PERMANENT, NON-DETERIORATING ISOLATION MATERIAL.
3. SET SUPPORTING FRAMES AND STRUCTURAL ELEMENTS TO REQUIRED ELEVATIONS, PROPERLY ALIGNED, PLUMB AND LEVEL.
4. INSTALL CANOPY ROOF SECTIONS, ACCESSORIES, AND RELATED FLASHINGS WATERTIGHT. PROVIDE ROOF SLOPE FOR RAIN DRAINAGE WITHOUT PONDING WATER. ALIGN AND ANCHOR ROOFING TO STRUCTURAL SUPPORT MEMBERS.

WARRANTY:
MANUFACTURER SHALL WARRANT THE ENTIRE SYSTEM AGAINST DEFECTS IN LABOR AND MATERIALS FOR A PERIOD OF 2 YEARS COMMENCING ON THE DATE OF SUBSTANTIAL COMPLETION. THIS WARRANTY REQUIRES THE MANUFACTURER TO DO ALL THAT IS NECESSARY TO EFFECTIVELY CORRECT ANY DEFICIENCIES IN A TIMELY MANNER AT NO EXPENSE TO THE OWNER.

STRUCTURAL ABBREVIATIONS

&	AND	EXP	EXPANSION	PEMB	PRE-ENGINEERED METAL BUILDING
@	AT	FE	FIRE EXTINGUISHER	PERP	PERPENDICULAR
#	NUMBER	FF	FAR FACE, FINISHED FLOOR	PL	PLATE
ADDTL	ADDITIONAL	FG	FINISHED GRADE	PLF	POUND PER LINEAR FOOT
ALUM	ALUMINUM	FRP	FIBER REINFORCED PLASTIC	PT	PRESSURE TREATED
AEWS	AUTOMATIC END WELDED STUD(S)	FT	FOOT	PROJ	PROJECTION
ALT	ALTERNATE	FTG	FOOTING	PSF	POUNDS PER SQUARE FOOT
APROX	APPROXIMATE(LY)	FV	FIELD VERIFY	PSI	POUNDS PER SQUARE INCH
BLD	BUILDING	GA	GAGE	PVC	POLYVINYL CHLORIDE
BM	BEAM	GALV	GALVANIZED	R	RADIUS
BOT	BOTTOM	HK	HOOK	REINF	REINFORCING
CJ	CONTROL JOINT	HORIZ	HORIZONTAL	REQD	REQUIRED
CL	CENTER LINE	HSS	HOLLOW STRUCTURAL SECTION	SCHED	SCHEDULE(D)
CLR	CLEAR	HP	HIGH POINT	SIM	SIMILAR
CMU	CONCRETE MASONRY UNIT	ID	INSIDE DIAMETER	SJ	SAWCUT JOINT
COL	COLUMN	JT	JOINT	SMS	SHEET METAL SCREW
CONC	CONCRETE	LB(S)	POUND(S)	SPECS	SPECIFICATIONS
CONN	CONNECTION	LONG	LONGITUDINAL	SQ	SQUARE
CONST JT	CONSTRUCTION JOINT	LP	LOW POINT	SS	STAINLESS STEEL
CONT	CONTINUOUS	MANUF	MANUFACTURER	STD	STANDARD
DIA	DIAMETER	MATL	MATERIAL	STL	STEEL
DEG	DEGREE(S)	MAX	MAXIMUM	T/	TOP OF
DO	DITTO	MECH	MECHANICAL	TB	TIE BEAM
DWG	DRAWING	MFR	MANUFACTURER	T&B	TOP AND BOTTOM
DWL	DOWEL(S)	MIN	MINIMUM	THK	THICK
(E)	EXISTING	MISC	MISCELLANEOUS	THRU	THROUGH
EA	EACH	MO	MASONRY OPENING	TOC	TOP OF CONCRETE
EF	EACH FACE	MTL	METAL	TOS	TOP OF STEEL
EJ	EXPANSION JOINT	NO	NUMBER	TYP	TYPICAL
EL	ELEVATION	NTS	NOT TO SCALE	UNO	UNLESS NOTED OTHERWISE
ELEC	ELECTRICAL	OC	ON CENTER	VERT	VERTICAL
EMBED	EMBEDMENT	OD	OUTSIDE DIAMETER	WT	WEIGHT
EQ	EQUAL	OH	OPPOSITE HAND	WWF	WELDED WIRE FABRIC
EW	EACH WAY	OPNG	OPENING		
EXIST	EXISTING	PCS	PIECES		

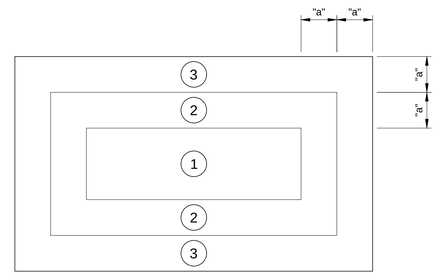

ROOF ZONE
KEY PLAN

WIND DESIGN PRESSURES COMPONENTS CLADDING (+ , -) PSF							
ROOF							
EFFECTIVE AREA (SF)		ZONE 1		ZONE 2		ZONE 3	
		(+)	(-)	(+)	(-)	(+)	(-)
$\leq a^2$	9 SF	52	-47	79	-72	105	-140
$2a^2$	18 SF	52	-47	79	-72	79	-72
$> 4a^2$	36.1 SF	52	-47	52	-47	52	-47

NOTES:
1. FOR WIND DESIGN CRITERIA SEE "WINDLOADS" NOTES IN THE GENERAL STRUCTURAL NOTES THIS SHEET DESIGN PRESSURES ARE PROVIDED AT ULTIMATE DESIGN WIND SPEEDS. TO CONVERT TO NOMINAL DESIGN WIND SPEEDS (ASD) MULTIPLE PRESSURE BY A FACTOR OR 0.60.
2. THE EFFECTIVE AREA SHALL BE DETERMINED AS FOLLOWS UNLESS OTHERWISE NOTED:
   a. THE SPAN LENGTH MULTIPLIED BY AN EFFECTIVE WIDTH THAT NEED NOT BE LESS THAN ONE THIRD THE SPAN LENGTH.
   b. THE AREA THAT IS TRIBUTARY TO AN INDIVIDUAL FASTENER.
3. NEGATIVE SIGN INDICATES PRESSURE ACTING OUTWARD FROM SURFACE.
4. CORNER ZONE WIDTH: "a" : a = 3 FT

LEGEND

STRUCTURAL LEGEND APPLIES TO "S" SHEETS ONLY

- EARTH FILL
- UNDISTURBED EARTH
- COMPACTED GRANULAR FILL
- GROUT OR SAND (AS NOTED)
- GRATING
- CONCRETE
- EXISTING CONCRETE
- DEMOLITION
- STEEL
- PRECAST CONCRETE

SYMBOLS

SYMBOLS APPLY TO "S" SHEETS ONLY

- 1 — COLUMN OR WALL LINE TAG
- T/SLAB EL.0.00 — ELEVATION TAG
- 00 / S00 — SECTION NO. / BUILDING SECTION INDICATOR / DWG. NO. OF SECTION VIEW
- A / S00 — DETAIL NO. / DETAIL INDICATOR / DWG. NO / INDICATES DETAIL SECTION CUT (WHERE SHOWN)

WEKIVA ENGINEERING
711 N ORANGE AVE, SUITE A
WINTER PARK, FL 32789
P: 321.972.4989 CA Lic. No: 31920
WEKIVA PROJECT #18-124

THIS ITEM HAS BEEN ELECTRONICALLY SIGNED AND SEALED BY JOHN V. SOBCZAK, PE (FL#71407) ON THE DATE INDICATED USING A DIGITAL SIGNATURE.

PRINTED COPIES OF THIS DOCUMENT ARE NOT CONSIDERED SIGNED AND SEALED AND THE SIGNATURE MUST BE VERIFIED ON ANY ELECTRONIC COPIES.

JOHN VINCENT SOBCZAK LICENSE No. 71407 STATE OF FLORIDA PROFESSIONAL ENGINEER

BID DOCUMENTS

RECORD DRAWINGS
SURVEYED BY: DRAWN BY:
REVIEWED BY: PROJECT ENGINEER DATE
APPROVED BY: CITY ENGINEERING DIRECTOR TARA KIVETT, P.E. #86611 DATE

REVISION	BY	DATE

CITY OF CLEARWATER, FLORIDA
ENGINEERING DEPARTMENT
100 S. MYRTLE AVE.
CLEARWATER, FL 33756

INVESTIGATE BEFORE YOU EXCAVATE. CALL 811 SUNSHINE STATE ONE CALL OF FLORIDA www.sunshine811.com (800) 432-4770 MIN. 48 HOURS BEFORE YOU EXCAVATE

JonesEdmunds
CERTIFICATE OF AUTHORIZATION #1841
730 NE WALDO ROAD, GAINESVILLE, FLORIDA 32641 / (352) 377-5821
324 S HYDE PARK AVE, SUITE 250, TAMPA, FLORIDA 33606 / (813) 258-0703

NE WRF SLUDGE BLEND TANK IMPROVEMENTS
GENERAL NOTES, ABBREVIATIONS, SYMBOLS, AND LEGEND

DWG NAME: S1.dwg	FIELD BOOK:	SURVEYED BY:	SCALE: VERT. HORIZ. AS NOTED
CONTRACT NO.: 14-0036-UT	DATE DRAWN: AUGUST 2019	DRAWN BY: JVS	
JOB NO.: 03720-048-01	DESIGNED BY: JVS	CHECKED BY: DSM	SHEET NO.: S1

APPROVED FOR CONSTRUCTION
THOMAS W. FRIEDRICH, P.E. # 61281 DATE

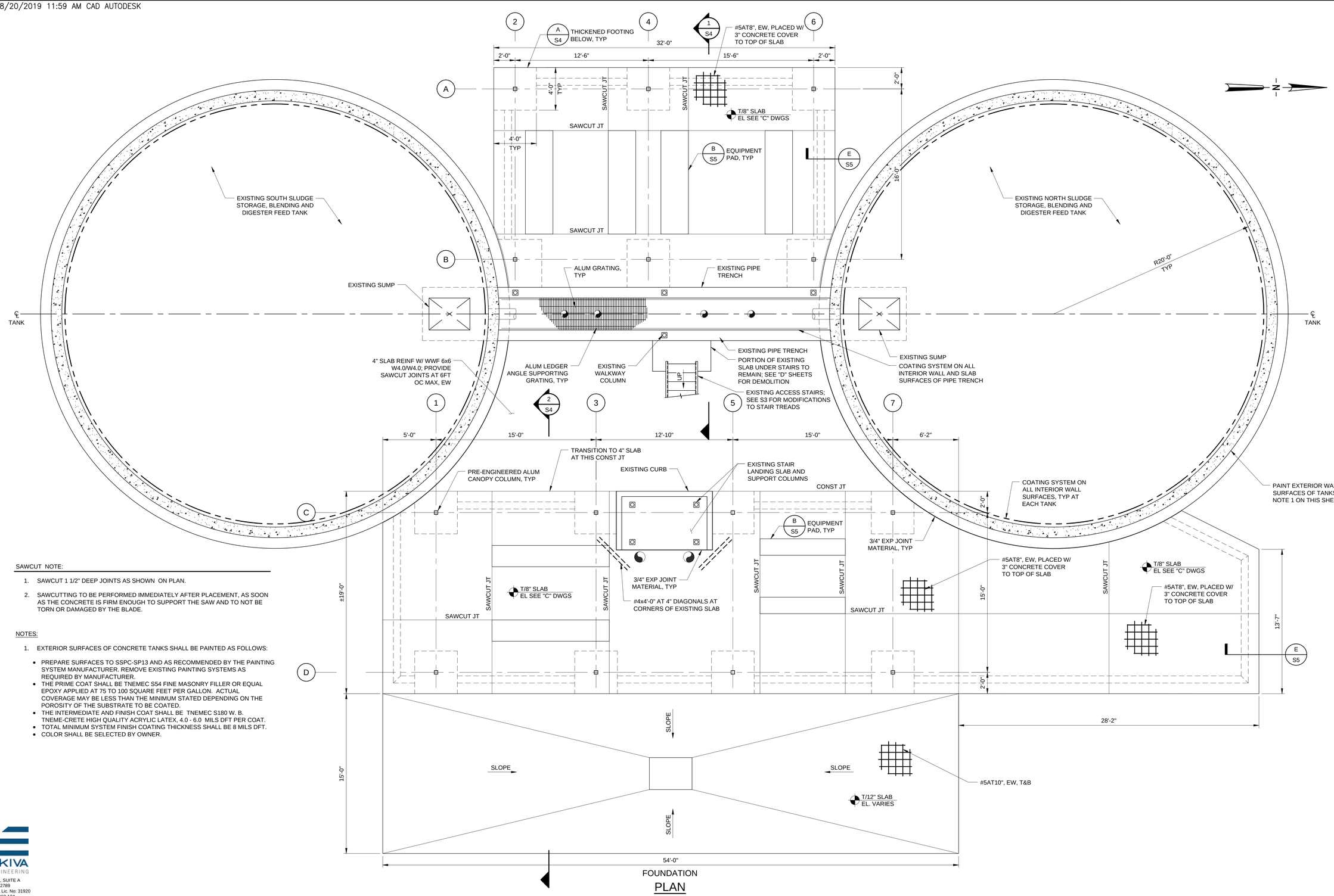

FOUNDATION

PLAN

1/4"=1'-0"

SAWCUT NOTE:

1. SAWCUT 1 1/2" DEEP JOINTS AS SHOWN ON PLAN.
2. SAWCUTTING TO BE PERFORMED IMMEDIATELY AFTER PLACEMENT, AS SOON AS THE CONCRETE IS FIRM ENOUGH TO SUPPORT THE SAW AND TO NOT BE TORN OR DAMAGED BY THE BLADE.

NOTES:

1. EXTERIOR SURFACES OF CONCRETE TANKS SHALL BE PAINTED AS FOLLOWS:
   - PREPARE SURFACES TO SSPC-SP13 AND AS RECOMMENDED BY THE PAINTING SYSTEM MANUFACTURER. REMOVE EXISTING PAINTING SYSTEMS AS REQUIRED BY MANUFACTURER.
   - THE PRIME COAT SHALL BE TNEMEC S54 FINE MASONRY FILLER OR EQUAL EPOXY APPLIED AT 75 TO 100 SQUARE FEET PER GALLON. ACTUAL COVERAGE MAY BE LESS THAN THE MINIMUM STATED DEPENDING ON THE POROSITY OF THE SUBSTRATE TO BE COATED.
   - THE INTERMEDIATE AND FINISH COAT SHALL BE TNEMEC S180 W. B. TNEME-CRETE HIGH QUALITY ACRYLIC LATEX, 4.0 - 6.0 MILS DFT PER COAT.
   - TOTAL MINIMUM SYSTEM FINISH COATING THICKNESS SHALL BE 8 MILS DFT.
   - COLOR SHALL BE SELECTED BY OWNER.

WEKIVA ENGINEERING
711 N ORANGE AVE, SUITE A
WINTER PARK, FL 32789
P: 321.972.4989 CA Lic. No: 31920
WEKIVA PROJECT #18-124

BID DOCUMENTS

RECORD DRAWINGS

SURVEYED BY: DRAWN BY:

REVIEWED BY: PROJECT ENGINEER DATE

APPROVED BY: CITY ENGINEERING DIRECTOR TARA KIVETT, P.E. #66611 DATE

REVISION	BY	DATE

CITY OF CLEARWATER, FLORIDA
ENGINEERING DEPARTMENT
100 S. MYRTLE AVE.
CLEARWATER, FL 33756

INVESTIGATE BEFORE YOU EXCAVATE
CALL 811
SUNSHINE STATE ONE CALL OF FLORIDA
www.sunshine811.com
(800) 432-4770
MIN. 48 HOURS BEFORE YOU EXCAVATE

JonesEdmunds
CERTIFICATE OF AUTHORIZATION #1841
730 NE WALDO ROAD, GAINESVILLE, FLORIDA 32641 / (352) 377-5821
324 S HYDE PARK AVE, SUITE 250, TAMPA, FLORIDA 33606 / (813) 258-0703

NE WRF SLUDGE BLEND TANK IMPROVEMENTS
SLUDGE PUMP STATION
FOUNDATION PLAN

DWG NAME: S2.dwg	FIELD BOOK:	SURVEYED BY:	SCALE: VERT.
CONTRACT NO.: 14-0036-UT	DATE DRAWN: AUGUST 2019	DRAWN BY: JVS	HORIZ. AS NOTED
JOB NO.: 03720-048-01	DESIGNED BY: JVS	CHECKED BY: DSM	SHEET NO.: S2

APPROVED FOR CONSTRUCTION
THOMAS W. FRIEDRICH, P.E. # 61281 DATE

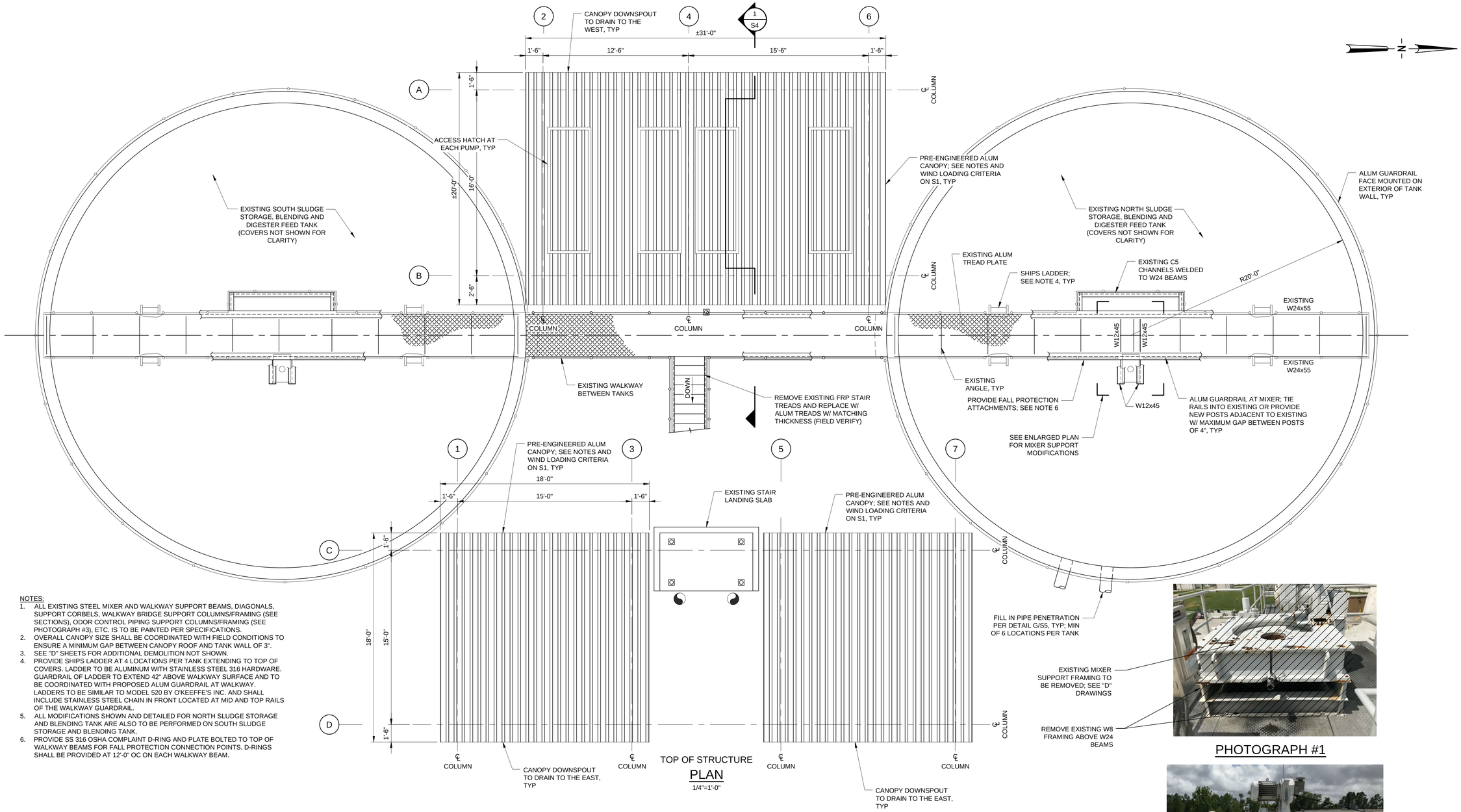

TOP OF STRUCTURE
PLAN
1/4"=1'-0"

NOTES:

1. ALL EXISTING STEEL MIXER AND WALKWAY SUPPORT BEAMS, DIAGONALS, SUPPORT CORBELS, WALKWAY BRIDGE SUPPORT COLUMNS/FRAMING (SEE SECTIONS), ODOR CONTROL PIPING SUPPORT COLUMNS/FRAMING (SEE PHOTOGRAPH #3), ETC. IS TO BE PAINTED PER SPECIFICATIONS.
2. OVERALL CANOPY SIZE SHALL BE COORDINATED WITH FIELD CONDITIONS TO ENSURE A MINIMUM GAP BETWEEN CANOPY ROOF AND TANK WALL OF 3".
3. SEE "D" SHEETS FOR ADDITIONAL DEMOLITION NOT SHOWN.
4. PROVIDE SHIPS LADDER AT 4 LOCATIONS PER TANK EXTENDING TO TOP OF COVERS. LADDER TO BE ALUMINUM WITH STAINLESS STEEL 316 HARDWARE. GUARDRAIL OF LADDER TO EXTEND 42" ABOVE WALKWAY SURFACE AND TO BE COORDINATED WITH PROPOSED ALUM GUARDRAIL AT WALKWAY. LADDERS TO BE SIMILAR TO MODEL 520 BY O'KEEFFE'S INC. AND SHALL INCLUDE STAINLESS STEEL CHAIN IN FRONT LOCATED AT MID AND TOP RAILS OF THE WALKWAY GUARDRAIL.
5. ALL MODIFICATIONS SHOWN AND DETAILED FOR NORTH SLUDGE STORAGE AND BLENDING TANK ARE ALSO TO BE PERFORMED ON SOUTH SLUDGE STORAGE AND BLENDING TANK.
6. PROVIDE SS 316 OSHA COMPLAINT D-RING AND PLATE BOLTED TO TOP OF WALKWAY BEAMS FOR FALL PROTECTION CONNECTION POINTS. D-RINGS SHALL BE PROVIDED AT 12'-0" OC ON EACH WALKWAY BEAM.

PHOTOGRAPH #1

PHOTOGRAPH #2

BID DOCUMENTS

WEKIVA ENGINEERING
711 N ORANGE AVE, SUITE A
WINTER PARK, FL 32789
P: 321.972.4989 CA Lic. No: 31920
WEKIVA PROJECT #18-124

RECORD DRAWINGS
SURVEYED BY: DRAWN BY:
REVIEWED BY: PROJECT ENGINEER DATE
APPROVED BY: CITY ENGINEERING DIRECTOR TARA KIVETT, P.E. #86611 DATE

REVISION	BY	DATE

CITY OF CLEARWATER, FLORIDA
ENGINEERING DEPARTMENT
100 S. MYRTLE AVE.
CLEARWATER, FL 33756

INVESTIGATE BEFORE YOU EXCAVATE
CALL 811
SUNSHINE STATE ONE CALL OF FLORIDA
www.sunshine811.com
(800) 432-4770
MIN. 48 HOURS BEFORE YOU EXCAVATE

JonesEdmunds
CERTIFICATE OF AUTHORIZATION #1841
730 NE WALDO ROAD, GAINESVILLE, FLORIDA 32641 / (352) 377-5821
324 S HYDE PARK AVE, SUITE 250, TAMPA, FLORIDA 33606 / (813) 258-0703

NE WRF SLUDGE BLEND TANK IMPROVEMENTS
SLUDGE PUMP STATION
TOP OF STRUCTURE PLAN

DWG NAME: S2.dwg	FIELD BOOK:	SURVEYED BY:	SCALE: VERT.
CONTRACT NO.: 14-0036-UT	DATE DRAWN: AUGUST 2019	DRAWN BY: JVS	HORZ. AS NOTED
JOB NO.: 03720-048-01	DESIGNED BY: JVS	CHECKED BY: DSM	SHEET NO.: S3
APPROVED FOR CONSTRUCTION	THOMAS W. FRIEDRICH, P.E. # 61281		DATE

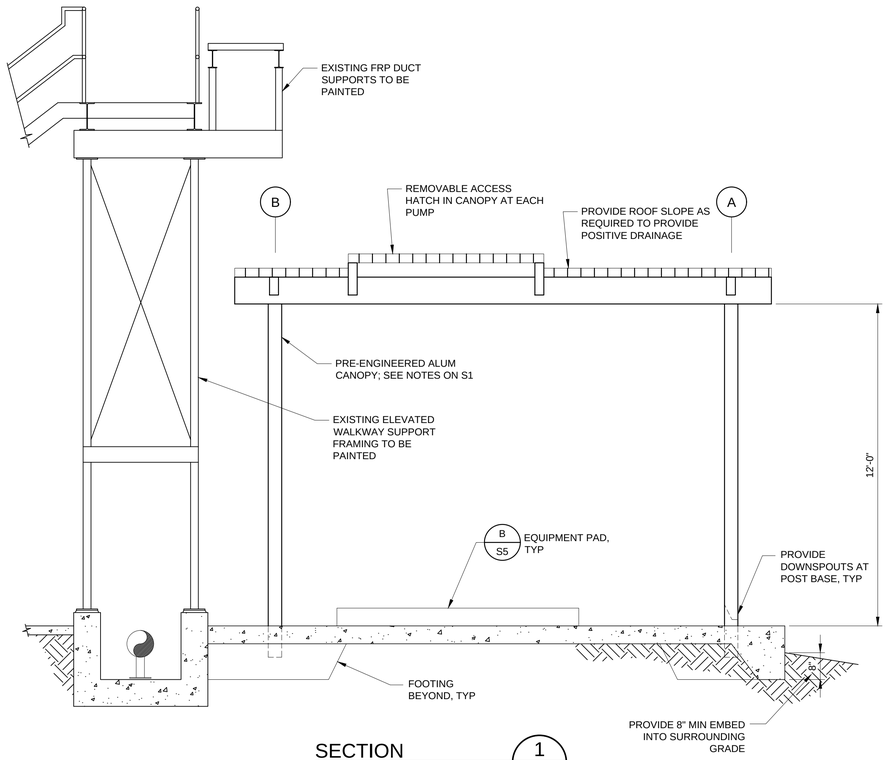

SECTION 1/S2
3/8"=1'-0"

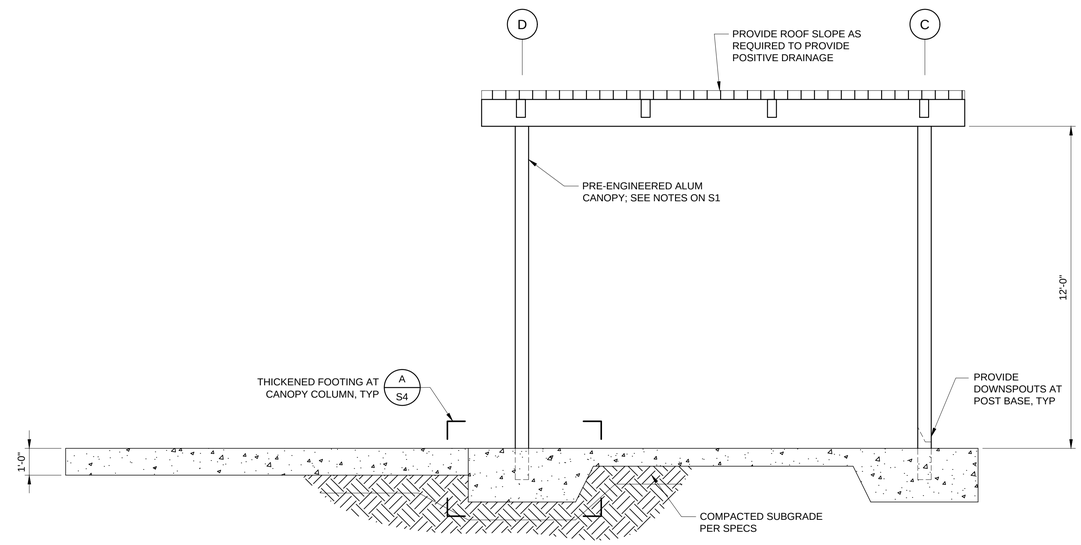

SECTION 2/S2
3/8"=1'-0"

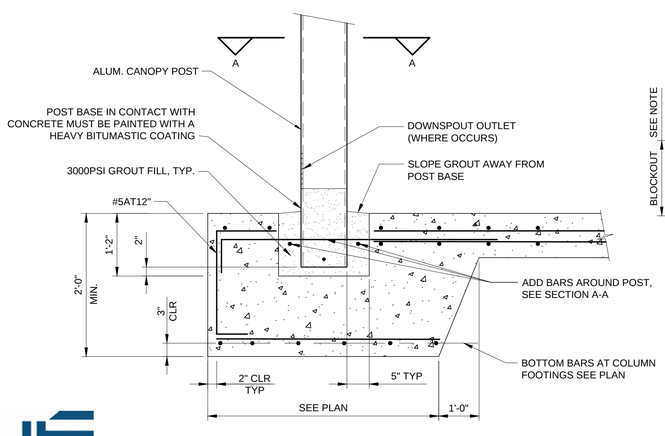

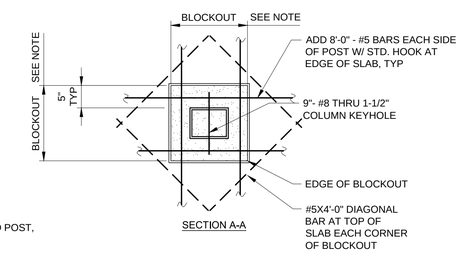

NOTE:
1. CONTRACTOR TO CONFIRM POST SIZE PRIOR TO SLAB REINFORCING SHOP DRAWING SUBMITTAL IN ORDER TO VERIFY BLOCKOUT SIZE.

DETAIL A/S4
1"=1'-0"

PHOTOGRAPH #3

WEKIVA ENGINEERING
711 N ORANGE AVE, SUITE A
WINTER PARK, FL 32789
P: 321.972.4989 CA Lic. No: 31920
WEKIVA PROJECT #18-124

BID DOCUMENTS

RECORD DRAWINGS
SURVEYED BY: DRAWN BY:
REVIEWED BY: PROJECT ENGINEER DATE
APPROVED BY: CITY ENGINEERING DIRECTOR TARA KIVETT, P.E. #86611 DATE

REVISION	BY	DATE

CITY OF CLEARWATER, FLORIDA
ENGINEERING DEPARTMENT
100 S. MYRTLE AVE.
CLEARWATER, FL 33756

INVESTIGATE BEFORE YOU EXCAVATE
CALL 811
SUNSHINE STATE ONE CALL OF FLORIDA
www.sunshine811.com
(800) 432-4770
MIN. 48 HOURS BEFORE YOU EXCAVATE

JonesEdmunds
CERTIFICATE OF AUTHORIZATION #1841
730 NE WALDO ROAD, GAINESVILLE, FLORIDA 32641 / (352) 377-5821
324 S HYDE PARK AVE, SUITE 250, TAMPA, FLORIDA 33606 / (813) 258-0703

NE WRF SLUDGE BLEND TANK IMPROVEMENTS
SLUDGE PUMP STATION SECTIONS AND ENLARGED PLAN

DWG NAME: S2.dwg	FIELD BOOK:	SURVEYED BY:	SCALE: VERT.
CONTRACT NO.: 14-0036-UT	DATE DRAWN: AUGUST 2019	DRAWN BY: JVS	HORIZ. AS NOTED
JOB NO.: 03720-048-01	DESIGNED BY: JVS	CHECKED BY: DSM	SHEET NO.: S4

APPROVED FOR CONSTRUCTION
THOMAS W. FRIEDRICH, P.E. # 61281 DATE

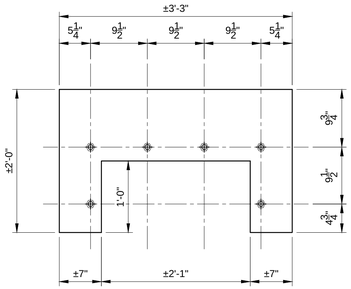

WELDED STRAP PLATE

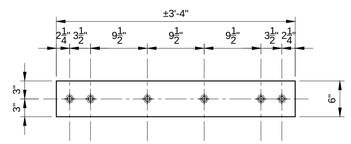

BOLTED ANGLE

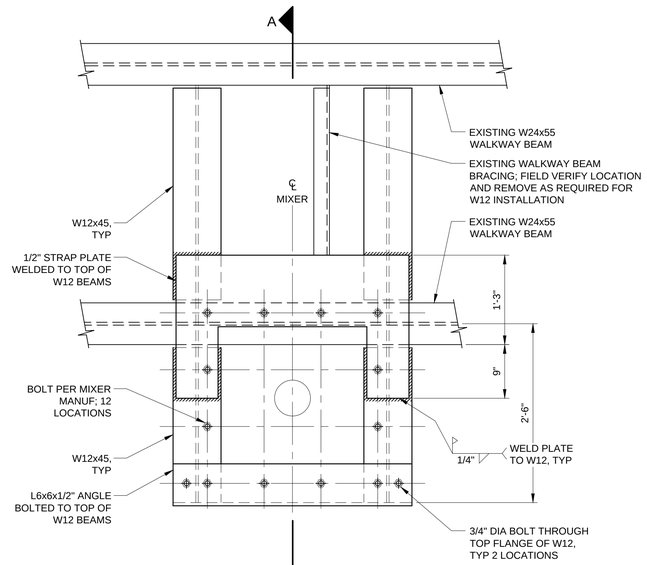

MIXER SUPPORT FRAMING

PLAN

1"=1'-0"

NOTES:
1. MIXER MOUNTING PLATE NOT SHOWN FOR CLARITY; COORD W/ MANUF FOR DIMENSIONS.
2. ALL BOLT LOCATIONS AND STRAP PLATE DIMENSIONS ARE TO BE CONFIRMED WITH FIELD CONDITIONS AND MIXER MANUFACTURER PRIOR TO ANY FABRICATION.

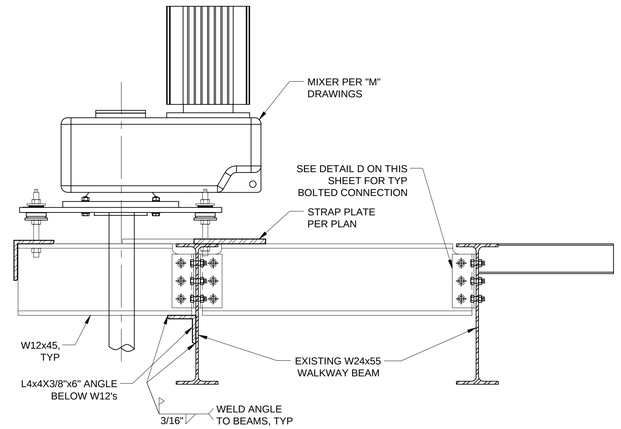

SECTION A-A

REBAR MINIMUM TENSION DEVELOPMENT & LAP LENGTHS

CONCRETE STRENGTH f'c= 4,000 PSI OR GREATER

BAR SIZE	DEVELOPMENT LENGTH, ld		LAP LENGTH (CLASS B SPLICE)		BAR SIZE
	TOP BARS	OTHER BARS	TOP BARS	OTHER BARS	
#3	1'-7"	1'-3"	2'-0"	1'-7"	#3
#4	2'-1"	1'-7"	2'-8"	2'-0"	#4
#5	2'-7"	2'-0"	3'-4"	2'-7"	#5
#6	3'-1"	2'-4"	4'-0"	3'-1"	#6
#7	4'-6"	3'-6"	5'-10"	4'-6"	#7
#8	5'-2"	3'-11"	6'-8"	5'-2"	#8
#9	5'-10"	4'-6"	7'-6"	5'-10"	#9
#10	6'-6"	5'-0"	8'-6"	6'-6"	#10
#11	7'-3"	5'-7"	9'-6"	7'-3"	#11

NOTES:
1. GRADE 60 UNCOATED REINFORCEMENT
2. SPLICE LENGTHS GIVEN ABOVE ARE TO BE USED UNLESS NOTED OTHERWISE ON DESIGN DRAWINGS.

MAXIMUM BAR SPACING AT NON-CONTACT LAPS:

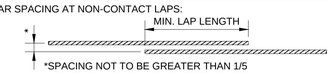

*SPACING NOT TO BE GREATER THAN 1/5 LAP LENGTH OR 6IN. WHICH EVER IS LESS

STANDARD HOOK DEVELOPMENT LENGTH

BAR SIZE	90° STD HOOK "A"	180° STD HOOK "J"	DEVELOPMENT LENGTH, ldh
#3	6"	3"	6"
#4	8"	4"	7"
#5	10"	5"	9"
#6	1'-0"	6"	10"
#7	1'-2"	7"	1'-0"
#8	1'-4"	8"	1'-2"
#9	1'-7"	11 3/4"	1'-3"
#10	1'-10"	1'-1 1/4"	1'-5"
#11	2'-0"	1'-2 3/4"	1'-7"

*FOR STD HOOK BAR GEOMETRY NOT SHOWN REFER TO MINIMUM ACI REQUIREMENTS

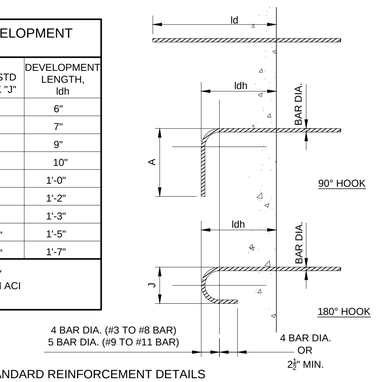

STANDARD REINFORCEMENT DETAILS

DETAIL A TYP

NTS

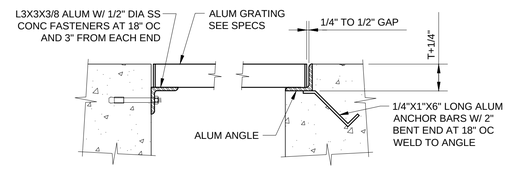

MAXIMUM SPAN	DEPTH	BEARING BAR	
		THICKNESS	SPACING
3'-0"	1 1/4"	3/16"	1 3/16"
4'-0"	1 1/2"	3/16"	1 3/16"
5'-0"	2"	3/16"	1 3/16"
6'-0"	2 1/4"	3/16"	1 3/16"

ALUM GRATING AND GRATING SUPPORT

DETAIL F

NTS

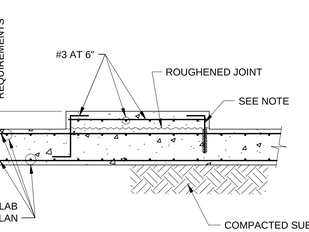

NOTE:
1. FOR EXISTING CONCRETE SLAB DRILL AND EPOXY #5AT12" AROUND PERIMETER W/ 6" MIN EMBEDMENT.

EQUIPMENT PAD

DETAIL B TYP

NTS

NOMINAL BEAM DEPTH, INCHES	ROWS OF BOLTS	LENGTH (3) OF ANGLE
12–15	3	8 1/2"
8–10	2	5 1/2"
6	1	3"

NOTES:
1. NUMBER OF ROWS IS EQUAL TO NUMBER OF BOLTS TO ENCLOSE WEB.
2. ALL FRAMING CONNECTIONS SHALL CONFORM TO SCHEDULE UNLESS DETAILED OTHERWISE ON FRAMING DRAWINGS.
3. USE SS BOLTS FOR ALL ALUMINUM FRAMING.
4. USE WASHERS ON NUTS.

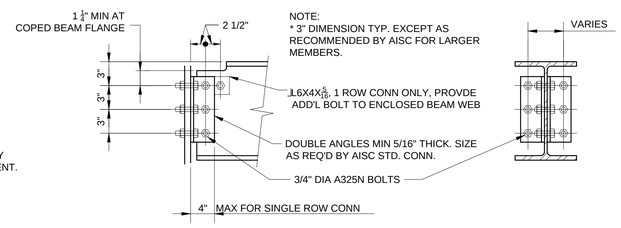

NOTE:
* 3" DIMENSION TYP. EXCEPT AS RECOMMENDED BY AISC FOR LARGER MEMBERS.

TYPICAL FRAMING CONNECTION

DETAIL D TYP

NTS

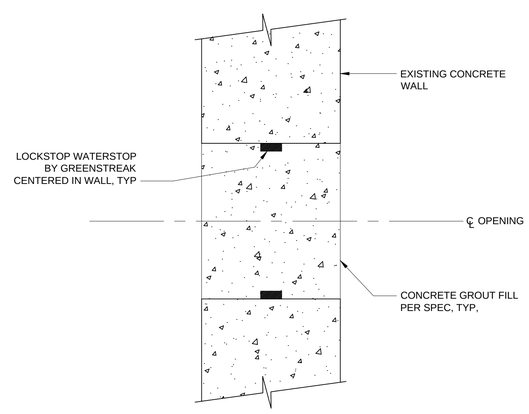

TYPICAL EXISTING PIPE PENETRATION THROUGH WALL

DETAIL G TYP

NTS

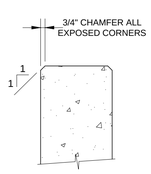

CHAMFER

DETAIL C TYP

NTS

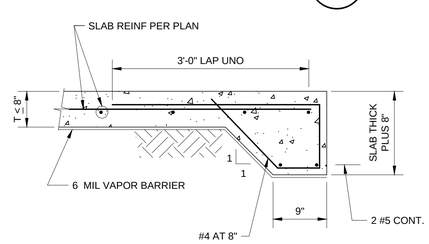

THICKENED EDGE SLAB

DETAIL E TYP

NTS

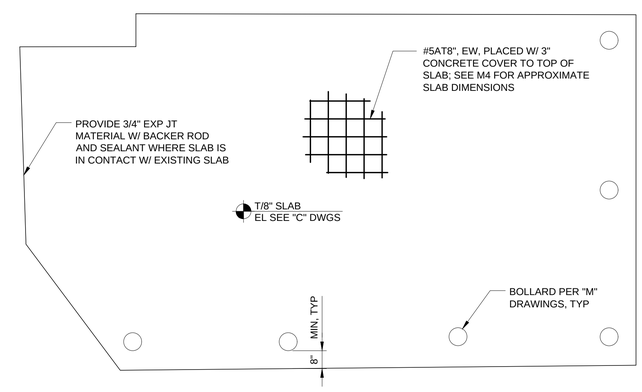

SLUDGE VALVE STATION

PLAN

3/8"=1'-0"

WEKIVA ENGINEERING
711 N ORANGE AVE, SUITE A
WINTER PARK, FL 32789
P: 321.972.4989 CA Lic. No: 31920
WEKIVA PROJECT #18-124

BID DOCUMENTS

RECORD DRAWINGS

SURVEYED BY: | DRAWN BY:

REVIEWED BY: PROJECT ENGINEER DATE

APPROVED BY: CITY ENGINEERING DIRECTOR TARA KIVETT, P.E. #66611 DATE

REVISION	BY	DATE

CITY OF CLEARWATER, FLORIDA
ENGINEERING DEPARTMENT
100 S. MYRTLE AVE.
CLEARWATER, FL 33756

INVESTIGATE BEFORE YOU EXCAVATE
CALL 811
SUNSHINE STATE ONE CALL OF FLORIDA
www.sunshine811.com
(800) 432-4770
MIN. 48 HOURS BEFORE YOU EXCAVATE

JonesEdmunds
CERTIFICATE OF AUTHORIZATION #1841
730 NE WALDO ROAD, GAINESVILLE, FLORIDA 32641 / (352) 377-5821
324 S HYDE PARK AVE, SUITE 250, TAMPA, FLORIDA 33606 / (813) 258-0703

NE WRF SLUDGE BLEND TANK IMPROVEMENTS

STANDARD DETAILS

DWG NAME: S5.dwg	FIELD BOOK:	SURVEYED BY:	SCALE: VERT.
CONTRACT NO.: 14-0036-UT	DATE DRAWN: AUGUST 2019	DRAWN BY: JVS	HORIZ. AS NOTED
JOB NO.: 03720-048-01	DESIGNED BY: JVS	CHECKED BY: DSM	SHEET NO.: S5

APPROVED FOR CONSTRUCTION: THOMAS W. FRIEDRICH, P.E. # 61281 DATE

MECHANICAL LEGEND

PIPING SYMBOLS

DOUBLE LINE	SINGLE LINE	
		PIPE
		WELDED PIPE
		FLANGED JOINT
		MECHANICAL JOINT OR RESTRAINED PUSH-ON JOINT
		FLEXIBLE COUPLING ADAPTER
		EXPANSION JOINT
		HUB & SPIGOT JOINT
		BALL JOINT
		FLANGED COUPLING ADAPTER W/ THRUST TIES
		FLEXIBLE COUPLING WITH THRUST TIES
		BLIND FLANGE
		ELBOW UP
		ELBOW DOWN
		TEE UP
		TEE DOWN
		FEMALE QUICK DISCONNECT FITTING
		MALE QUICK DISCONNECT FITTING
M		FLOW METER

DOUBLE LINE	SINGLE LINE	
		LATERAL UP
		LATERAL DOWN
		CONCENTRIC REDUCER
		ECCENTRIC REDUCER
		UNION
		CAP
		ANCHOR
		WYE
		TEE
		CROSS
		ELBOW, 90 DEGREE
		ELBOW, 45 DEGREE
		ELBOW, 22.5 DEGREE
		ABANDON IN PLACE
		DEMOLISH AND REMOVE

NOTE:
EXISTING PIPE AND EQUIPMENT ARE SHOWN IN THE DRAWINGS AS LIGHT-LINED AND/OR SCREENED. PROPOSED PIPE AND EQUIPMENT ARE SHOWN IN THE DRAWINGS AS HEAVY-LINED. ABOVE GRADE PIPE AND EQUIPMENT ARE SHOWN IN DRAWINGS AS SOLID-LINED. BELOW GRADE PIPE AND EQUIPMENT ARE SHOWN IN DRAWINGS AS DASHED-LINED. SEE BELOW EXAMPLES:

OR — EXISTING PIPE (ABOVE GRADE)
OR — NEW PIPE (BELOW GRADE)
— REUSE EXISTING PIPE

VALVE SYMBOLS

101

PLUG
BUTTERFLY
BALL
CHECK
DIAPHRAGM

ACTUATOR SYMBOLS

M XX — ELECTRIC MOTOR
EH XX — ELECTROHYDRAULIC
P XX — PNEUMATIC
H XX — HYDRAULIC
S — SOLENOID
MANUAL

NOTE:
ON LOSS OF PRIMARY POWER (PNEUMATIC, ELECTRICAL OR HYDRAULIC)
XX: FO = FAIL OPEN
FC = FAIL CLOSED
FLP = FAIL TO LAST POSITION

THOMAS W. FRIEDRICH LICENSE No. 61281 STATE OF FLORIDA PROFESSIONAL ENGINEER

THIS ITEM HAS BEEN ELECTRONICALLY SIGNED AND SEALED BY THOMAS W. FRIEDRICH, PE (FL#61281) ON THE DATE INDICATED USING A *SHA* AUTHENTICATION CODE.

PRINTED COPIES OF THIS DOCUMENT ARE NOT CONSIDERED SIGNED AND SEALED AND THE *SHA* AUTHENTICATION CODE MUST BE VERIFIED ON ANY ELECTRONIC COPIES.

PIPE SCHEDULE

PIPE ABBREVIATION	FLOW STREAM IDENTIFICATION	PIPE/DUCT MATERIAL	PIPE/DUCT MATERIAL ABBREVIATION	SPECIFICATION REFERENCE	PIPE LINING	OPERATING PRESSURE (PSIG)	FIELD TEST PRESSURE (PSIG)	ABOVE GRADE PAINT SYSTEM	COLOR CODE	RESTRAINT SYSTEM NOTES
BSL-1	BLENDED SLUDGE LINE	DUCTILE IRON	DI	15155	EPOXY	50	150	10	DARK BROWN	J,V,F
CTSL-1	COMBINED THICKENED SLUDGE LINE	DUCTILE IRON	DI	15155	EPOXY	50	150	10	DARK BROWN	J,V,F
ADIG-1	ANAEROBICALLY DIGESTED SLUDGE	DUCTILE IRON	DI	15155	EPOXY	50	150	10	DARK BROWN	J,V,F
DR-1	DRAIN	DUCTILE IRON	DI	15155	CEMENT MORTAR	0	25	10	BLACK	J,V,F
DWF-1	DEWATERING FEED	DUCTILE IRON	DI	15155	EPOXY	50	150	10	DARK BROWN	J,V,F
EFW-1	EFFLUENT FLUSHING WATER	POLYVINYL CHLORIDE	PVC	15290	N/A	50	100	41	PURPLE	J,V,F
TPSL-1	THICKENED PRIMARY SLUDGE LINE	DUCTILE IRON	DI	15155	EPOXY	50	150	10	DARK BROWN	J,V,F
SC-1	SECONDARY SCUM	DUCTILE IRON	DI	15155	EPOXY	50	100	10	DARK BROWN	J,V,F
TSL-1	TRUCKED SLUDGE LINE	DUCTILE IRON	DI	15155	EPOXY	50	150	10	DARK BROWN	J,V,F
TWAS-1	THICKENED WASTE ACTIVATED SLUDGE	DUCTILE IRON	DI	15155	EPOXY	50	150	10	DARK BROWN	J,V,F

GENERAL NOTES:
(1) COAT EXTERIOR OF BURIED PIPE PER SPECIFICATIONS
(2) TEST LINES PER PROCEDURE IN SECTION 15144 UNLESS SPECIFIED AND/OR NOTED OTHERWISE
(3) PAINT SYSTEM PRESENTED IN SECTION 09900
(4) FLOW STREAM IDENTIFICATION SHALL BE ABOVE GRADE PIPING IN ACCORDANCE WITH SECTION 15075

SPECIFIC NOTES:
(A) DISINFECT PIPING PER SPECIFICATIONS

RESTRAINT NOTES:
(J) RESTRAIN ALL BURIED PIPE JOINTS
(F) RESTRAIN ALL BURIED PIPE FITTINGS
(V) RESTRAIN ALL BURIED PIPE VALVES

CAST-IRON, NON-LUBRICATED, ECCENTRIC PLUG VALVE ISOLATION SCHEDULE

VALVE NO.	PIPE ABBV	TYPE	SIZE (INCHES)	PURPOSE	ACTUATION	NORMAL STATUS
TRUCK OFF-LOADING PUMP STATION						
101-V-1	TSL-1	4V920	4	ISOLATION VALVE FOR DRAIN OF TRUCK OFF-LOADING CONNECTION	MANUAL GEAR	CLOSED
101-V-2	TSL-1	6V920	6	ISOLATION VALVE FOR TRUCK OFF-LOADING CONNECTION	MANUAL GEAR	CLOSED
101-V-3	TSL-1	6V920	8	ISOLATION VALVE FROM THE TRUCK-OFF LOADING TO PUMP 101-P-1	MANUAL GEAR	OPEN
101-V-4	TSL-1	6V920	8	ISOLATION VALVE FROM THE TRUCK-OFF LOADING TO PUMP 101-P-2	MANUAL GEAR	CLOSED
101-V-5	TSL-1	8V920	8	PUMP DISCHARGE ISOLATION VALVE FOR PUMP 101-P-1	MANUAL GEAR	OPEN
101-V-6	TSL-1	8V920	8	PUMP DISCHARGE ISOLATION VALVE FOR PUMP 101-P-2	MANUAL GEAR	CLOSED
101-V-7	TSL-1	8V920	8	NORTH BLEND TANK FILL LINE	MANUAL GEAR	OPEN
101-V-8	TSL-1	8V920	8	SOUTH BLEND TANK FILL LINE	MANUAL GEAR	CLOSED
101-V-9	TSL-1	8V920	8	ISOLATION VALVE FOR NORTH BIOSOLIDS BLEND TANK ENTRANCE	MANUAL GEAR	OPEN
101-V-10	TSL-1	8V920	8	ISOLATION VALVE FOR SOUTH DEWATERING STORAGE TANK ENTRANCE	MANUAL GEAR	CLOSED
ANAEROBIC DIGESTER FEED PUMP STATION						
102-V-1	BSL-1	6V920	6	ISOLATION VALVE FOR NORTH BIOSOLIDS BLEND TANK INTO THE DF PUMP STATION	MANUAL GEAR	OPEN
102-V-2	BSL-1	6V920	6	ISOLATION VALVE FOR SOUTH DEWATERING STORAGE TANK INTO THE DF PUMP STATION	MANUAL GEAR	CLOSED
102-V-3	BSL-1	6V920	6	ISOLATION VALVE FOR DF GRINDER SUCTION	MANUAL GEAR	OPEN
102-V-4	BSL-1	6V920	6	ISOLATION VALVE FOR DF GRINDER DISCHARGE	MANUAL GEAR	OPEN
102-V-5	BSL-1	6V920	6	ISOLATION VALVE FOR BYPASS OF DF GRINDER	MANUAL GEAR	CLOSED
102-V-6	BSL-1	6V920	6	ISOLATION VALVE TO PUMP 102-P-1	MANUAL GEAR	OPEN
102-V-7	BSL-1	6V920	6	ISOLATION VALVE TO PUMP 102-P-2	MANUAL GEAR	OPEN
102-V-8	BSL-1	4V920	4	PUMP ISOLATION VALVE FOR PUMP 102-P-1	MANUAL GEAR	OPEN
102-V-9	BSL-1	4V920	4	PUMP ISOLATION VALVE FOR PUMP 102-P-2	MANUAL GEAR	OPEN
102-V-10	BSL-1	4V920	4	ISOLATION VALVE FOR DF METER SUCTION	MANUAL GEAR	OPEN
102-V-11	BSL-1	4V920	4	ISOLATION VALVE FOR DF METER DISCHARGE	MANUAL GEAR	OPEN
102-V-12	BSL-1	4V920	4	ISOLATION VALVE FOR DF METER BYPASS	MANUAL GEAR	CLOSED
DEWATERING FEED PUMP STATION						
103-V-1	DWF-1	12V920	12	ISOLATION VALVE ON THE BLEND TANKS DISCHARGE MANIFOLD FOR THE NORTH BIOSOLIDS BLEND TANK	MANUAL GEAR	CLOSED
103-V-2	DWF-1	12V920	12	ISOLATION VALVE ON THE BLEND TANKS DISCHARGE MANIFOLD FOR THE SOUTH DEWATERING STORAGE TANK	MANUAL GEAR	OPEN
103-V-3	DWF-1	8V920	8	ISOLATION VALVE FROM BLEND TANKS DISCHARGE MANIFOLD TO PUMP 103-P-1	MANUAL GEAR	OPEN
103-V-4	DWF-1	8V920	8	ISOLATION VALVE FROM BLEND TANKS DISCHARGE MANIFOLD TO PUMP 103-P-2	MANUAL GEAR	OPEN
103-V-5	DWF-1	8V920	8	ISOLATION VALVE FROM BLEND TANKS DISCHARGE MANIFOLD TO PUMP 103-P-3	MANUAL GEAR	OPEN
103-V-6	DWF-1	8V920	8	ISOLATION VALVE FROM BLEND TANKS DISCHARGE MANIFOLD TO PUMP 103-P-4	MANUAL GEAR	OPEN
103-V-7	DWF-1	6V920	6	PUMP ISOLATION VALVE FOR PUMP 103-P-1	MANUAL GEAR	OPEN
103-V-8	DWF-1	6V920	6	PUMP ISOLATION VALVE FOR PUMP 103-P-2	MANUAL GEAR	OPEN
103-V-9	DWF-1	6V920	6	PUMP ISOLATION VALVE FOR PUMP 103-P-3	MANUAL GEAR	OPEN
103-V-10	DWF-1	6V920	6	PUMP ISOLATION VALVE FOR PUMP 103-P-4	MANUAL GEAR	OPEN
103-V-11	DWF-1	6V920	6	PUMP ISOLATION VALVE BETWEEN PUMP 103-P-4 AND 103-P-3	MANUAL GEAR	CLOSED
103-V-12	DWF-1	6V920	6	PUMP ISOLATION VALVE BETWEEN PUMP 103-P-4 AND 103-P-2	MANUAL GEAR	CLOSED
103-V-13	DWF-1	6V920	6	PUMP ISOLATION VALVE BETWEEN PUMP 103-P-4 AND 103-P-1	MANUAL GEAR	CLOSED
103-V-14	DWF-1	6V920	6	ISOLATION VALVE FOR TRUCK FILL CONNECTION	MANUAL GEAR	CLOSED
103-V-15	DWF-1	6V920	6	ISOLATION VALVE TO CENTRIFUGE	MANUAL GEAR	OPEN
103-V-16	DWF-1	6V920	6	ISOLATION VALVE TO SOUTH BELT FILTER PRESS	MANUAL GEAR	OPEN
103-V-17	DWF-1	6V920	6	ISOLATION VALVE TO NORTH BELT FILTER PRESS	MANUAL GEAR	OPEN
THICKENED WAS PUMP STATION						
104-V-1	TWAS-1	6V920	6	ISOLATION VALVE TO DIRECT THICKENED WAS TO THE SLUDGE STORAGE AND BLEND TANKS	ACTUATED	OPEN
104-V-2	TWAS-1	6V920	6	ISOLATION VALVE TO PREVENT THICKENED WAS TO THE SLUDGE STORAGE AND BLEND TANKS	ACTUATED	CLOSED
THICKENED PRIMARY SLUDGE						
105-V-1	TPSL-1	6V920	6	ISOLATION VALVE TO DIRECT THICKENED PRIMARY SLUDGE TO THE SLUDGE STORAGE AND BLEND TANKS	ACTUATED	OPEN
105-V-2	TPSL-1	6V920	6	ISOLATION VALVE TO PREVENT THICKENED PRIMARY SLUDGE TO THE SLUDGE STORAGE AND BLEND TANKS	ACTUATED	CLOSED
COMBINED THICKENED SLUDGE						
106-V-1	CTSL-1	6V920	6	ISOLATION VALVE FOR COMBINED THICKENED SLUDGE METER SUCTION	MANUAL GEAR	OPEN
106-V-2	CTSL-1	6V920	6	ISOLATION VALVE FOR COMBINED THICKENED SLUDGE METER DISCHARGE	MANUAL GEAR	OPEN
106-V-3	CTSL-1	6V920	6	ISOLATION VALVE FOR COMBINED THICKENED SLUDGE METER BYPASS	MANUAL GEAR	CLOSED
106-V-4	CTSL-1	6V920	6	ISOLATION VALVE FOR COMBINED THICKENED SLUDGE GRINDER SUCTION	MANUAL GEAR	OPEN
106-V-5	CTSL-1	6V920	6	ISOLATION VALVE FOR COMBINED THICKENED LSUDGE GRINDER DISCHARGE	MANUAL GEAR	OPEN
106-V-6	CTSL-1	6V920	6	ISOLATION VALVE FOR COMBINED THICKENED SLUDGE GRINDER BYPASS	MANUAL GEAR	CLOSED
106-V-7	CTSL-1	6V920	6	ISOLATION VALVE FOR COMBINED THICKENED SLUDGE FOR NORTH BIOSOLIDS BLEND TANK ENTRANCE	MANUAL GEAR	OPEN
106-V-8	CTSL-1	6V920	6	ISOLATION VALVE FOR COMBINED THICKENED SLUDGE BETWEEN BLEND AND STORAGE TANKS	MANUAL GEAR	CLOSED
106-V-9	CTSL-1	6V920	6	ISOLATION VALVE FOR COMBINED THICKENED SLUDGE FOR SOUTH DEWATERING STORAGE TANK ENTRANCE	MANUAL GEAR	CLOSED
ANAEROBIC DIGESTER BUILDING						
107-V-1	DTS/WS	6V920	6	ISOLATION VALVE TO ALLOW ANAEROBIC DIGESTED SLUDGE TO DIRECTLY FEED DEWATERING FEED PUMPS	MANUAL GEAR	CLOSED
107-V-2	DTS	6V920	6	ISOLATION VALVE ON DTS TO ROUTE DIGESTED SLUDGE THROUGH WS GRAVITY LINE	MANUAL GEAR	OPEN
107-V-3	BSL-1	4V920	4	ISOLATION VALVE FOR CONNECTION TO HEATED SLUDGE DISCHARGE	MANUAL GEAR	OPEN
107-V-4	WS	6V920	6	ISOLATION VALVE ON WS TO ROUTE DIGESTED SLUDGE OUT OF DIGESTER BUILDING	MANUAL GEAR	OPEN
BLEND TANK MISCELLANEOUS						
108-V-1	ADIG-1	8V920	8	ANAEROBIC DIGESTER ISOLATION VALVE FOR NORTH BIOSOLIDS BLEND TANK ENTRANCE	MANUAL GEAR	CLOSED
108-V-2	ADIG-1	8V920	8	ANAEROBIC DIGESTER ISOLATION VALVE BETWEEN BLEND AND STORAGE TANKS	MANUAL GEAR	OPEN
108-V-3	ADIG-1	8V920	8	ANAEROBIC DIGESTER ISOLATION VALVE FOR SOUTH DEWATERING STORAGE TANK ENTRANCE	MANUAL GEAR	OPEN
108-V-4	SC-1	6V920	6	SECONDARY SCUM PUMP ISOLATION VALVE FOR NORTH BIOSOLIDS BLEND TANK ENTRANCE	MANUAL GEAR	OPEN
108-V-5	SC-1	6V920	6	SECONDARY SCUM PUMP ISOLATION VALVE BETWEEN BLEND AND STORAGE TANKS	MANUAL GEAR	CLOSED
108-V-6	SC-1	6V920	6	SECONDARY SCUM PUMP ISOLATION VALVE FOR SOUTH DEWATERING STORAGE TANK ENTRANCE	MANUAL GEAR	CLOSED
108-V-7	DWF-1	12V920	12	ISOLATION VALVE TO DIRECT BYPASS DEWATERING TO THE SOUTH	MANUAL GEAR	OPEN
108-V-8	DWF-1	12V920	12	ISOLATION VALVE TO DIRECT BYPASS DEWATERING TO THE NORTH	MANUAL GEAR	OPEN
108-V-9	DWF-1	8V920	8	ISOLATION VALVE TO ALLOW DEWATERING BYPASS DIRECTLY FROM THE ANAEROBIC DIGESTER	MANUAL GEAR	CLOSED

BID DOCUMENTS

RECORD DRAWINGS
SURVEYED BY: DRAWN BY:
REVIEWED BY: PROJECT ENGINEER DATE
APPROVED BY: CITY ENGINEERING DIRECTOR TARA KIVETT, P.E. #86611 DATE

REVISION | BY | DATE

CITY OF CLEARWATER, FLORIDA
ENGINEERING DEPARTMENT
100 S. MYRTLE AVE.
CLEARWATER, FL 33756

INVESTIGATE BEFORE YOU EXCAVATE
CALL 811
SUNSHINE STATE ONE CALL OF FLORIDA
www.sunshine811.com
(800) 432-4770
MIN. 48 HOURS BEFORE YOU EXCAVATE

JonesEdmunds
CERTIFICATE OF AUTHORIZATION #1841
730 NE WALDO ROAD, GAINESVILLE, FLORIDA 32641 / (352) 377-5821
324 S HYDE PARK AVE, SUITE 250, TAMPA, FLORIDA 33606 / (813) 258-0703

NE WRF SLUDGE BLEND TANK IMPROVEMENTS
MECHANICAL ABBREVIATIONS AND LEGEND

DWG NAME: 0372004801-M01.dwg	FIELD BOOK:	SURVEYED BY:	SCALE: VERT.
CONTRACT NO.: 14-0036-UT	DATE DRAWN: AUGUST 2019	DRAWN BY: RWADE	HORIZ. NONE
JOB NO.: 03720-048-01	DESIGNED BY: DYONGE	CHECKED BY: AHOLMES	SHEET NO.: M1

APPROVED FOR CONSTRUCTION
THOMAS W. FRIEDRICH, P.E. # 61281 DATE

PLOT DATE: 8/20/2019 10:39 AM CAD AUTODESK

LAST SAVED: 6/14/2019 2:25 PM JKRAMER DWG LOCATION:\\TPA-MAIN\DRAFTING\03720 CLEARWATER\048-01 NE BLEND TANK IMPROVEMENTS\CONTRACT DRAWINGS\MECHANICAL\0372004801-M02.DWG

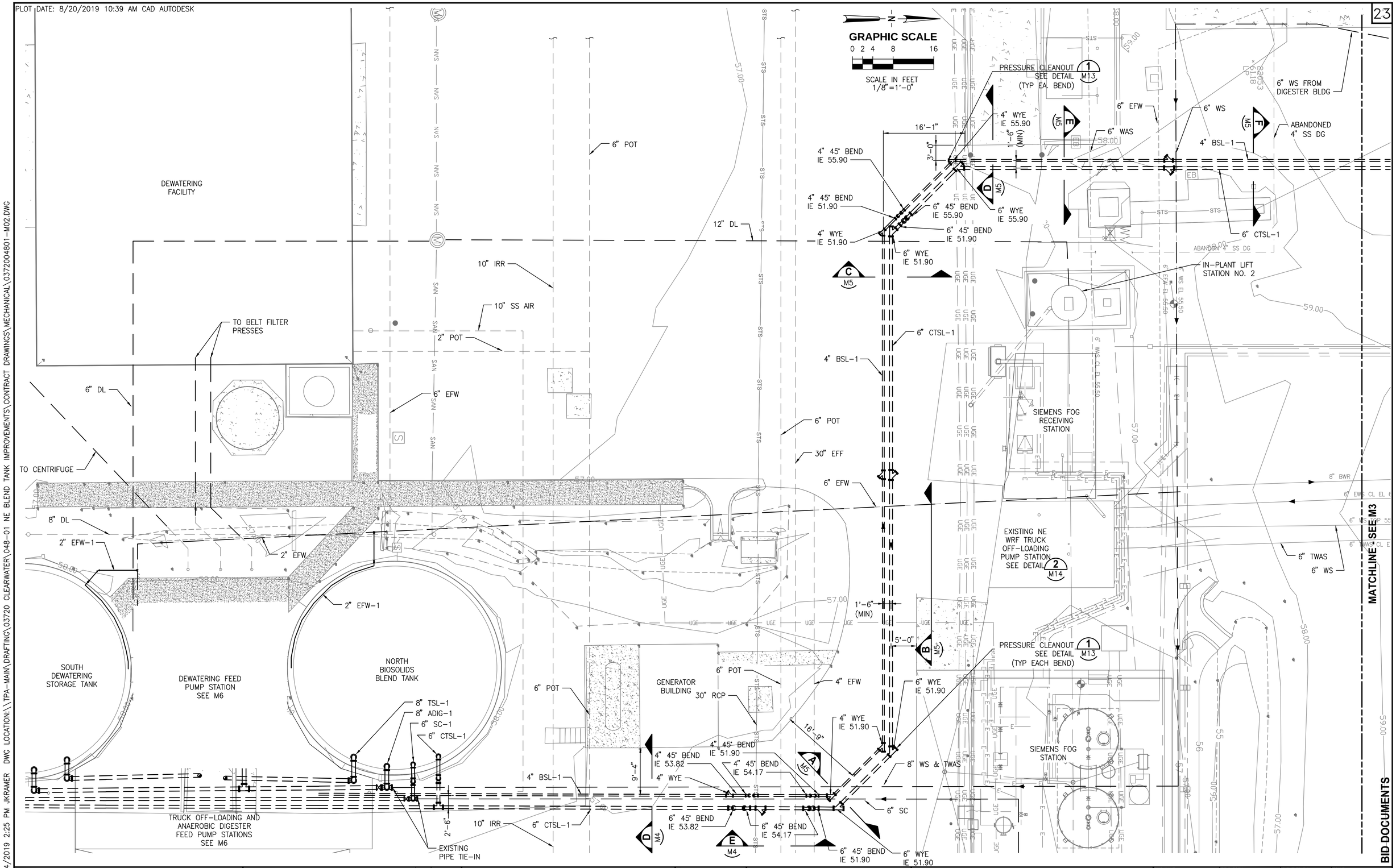

RECORD DRAWINGS	
SURVEYED BY:	DRAWN BY:
REVIEWED BY:	
PROJECT ENGINEER	DATE
APPROVED BY:	
CITY ENGINEERING DIRECTOR TARA KIVETT, P.E. #86611	DATE

REVISION	BY	DATE

CITY OF CLEARWATER, FLORIDA
ENGINEERING DEPARTMENT
100 S. MYRTLE AVE.
CLEARWATER, FL 33756

INVESTIGATE BEFORE YOU EXCAVATE
CALL 811
SUNSHINE STATE ONE CALL OF FLORIDA
www.sunshine811.com
(800) 432-4770
MIN. 48 HOURS BEFORE YOU EXCAVATE

JonesEdmunds
CERTIFICATE OF AUTHORIZATION #1841
730 NE WALDO ROAD, GAINESVILLE, FLORIDA 32641 / (352) 377-5821
324 S HYDE PARK AVE, SUITE 250, TAMPA, FLORIDA 33606 / (813) 258-0703

NE WRF SLUDGE BLEND TANK IMPROVEMENTS
YARD PIPING PLAN (1)

DWG NAME: 0372004801-M02.dwg	FIELD BOOK:	SURVEYED BY:	SCALE: VERT.
CONTRACT NO.: 14-0036-UT	DATE DRAWN: AUGUST 2019	DRAWN BY: RWADE	HORIZ. AS NOTED
JOB NO.: 03720-048-01	DESIGNED BY: DYONGE	CHECKED BY: AHOLMES	SHEET NO.: M2

APPROVED FOR CONSTRUCTION

THOMAS W. FRIEDRICH, P.E. # 61281 — DATE

PLOT DATE: 8/20/2019 10:40 AM CAD AUTODESK

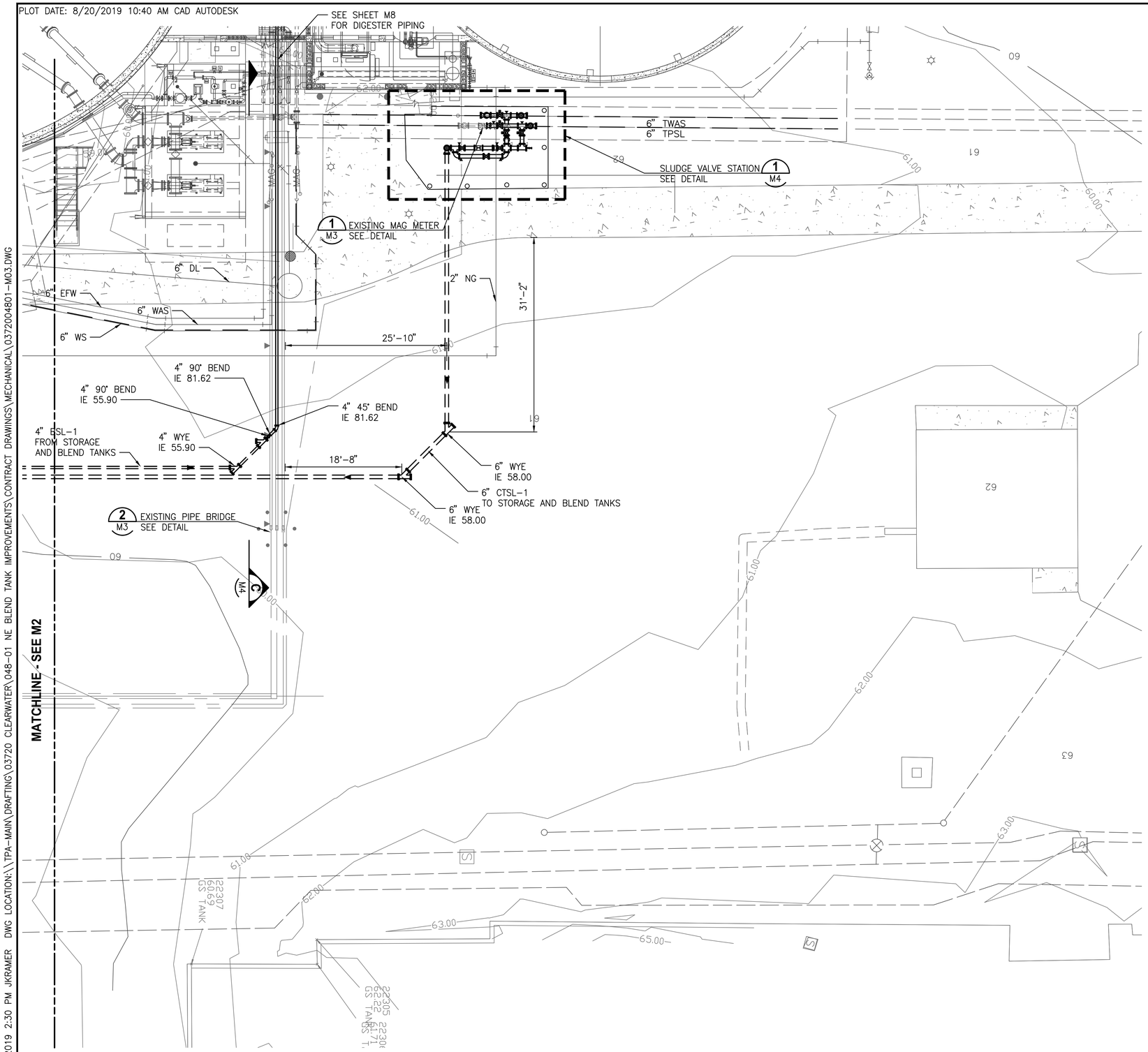

GRAPHIC SCALE

0 2 4 8 16

SCALE IN FEET
1/8"=1'-0"

EXISTING MAG METER 1 M3

NTS

EXISTING PIPE BRIDGE 2 M3

NTS

BID DOCUMENTS

LAST SAVED: 6/14/2019 2:30 PM JKRAMER DWG LOCATION:\\TPA-MAIN\DRAFTING\03720 CLEARWATER\048-01 NE BLEND TANK IMPROVEMENTS\CONTRACT DRAWINGS\MECHANICAL\03720048-01-M03.DWG

RECORD DRAWINGS

SURVEYED BY: DRAWN BY:

REVIEWED BY: PROJECT ENGINEER DATE

APPROVED BY: CITY ENGINEERING DIRECTOR TARA KIVETT, P.E. #66611 DATE

REVISION BY DATE

CITY OF CLEARWATER, FLORIDA
ENGINEERING DEPARTMENT
100 S. MYRTLE AVE.
CLEARWATER, FL 33756

INVESTIGATE BEFORE YOU EXCAVATE
CALL 811
SUNSHINE STATE ONE CALL OF FLORIDA
www.sunshine811.com
(800) 432-4770
MIN. 48 HOURS BEFORE YOU EXCAVATE

JonesEdmunds
CERTIFICATE OF AUTHORIZATION #1841
730 NE WALDO ROAD, GAINESVILLE, FLORIDA 32641 / (352) 377-5821
324 S HYDE PARK AVE, SUITE 250, TAMPA, FLORIDA 33606 / (813) 258-0703

NE WRF SLUDGE BLEND TANK IMPROVEMENTS
YARD PIPING PLAN (2)

DWG NAME: 0372004801-M03.dwg	FIELD BOOK:	SURVEYED BY:	SCALE: VERT.
CONTRACT NO.: 14-0036-UT	DATE DRAWN: AUGUST 2019	DRAWN BY: RWADE	HORIZ. AS NOTED
JOB NO.: 03720-048-01	DESIGNED BY: DYONGE	CHECKED BY: AHOLMES	SHEET NO.: M3

APPROVED FOR CONSTRUCTION

THOMAS W. FRIEDRICH, P.E. # 61281 DATE

PLOT DATE: 8/20/2019 10:40 AM CAD AUTODESK

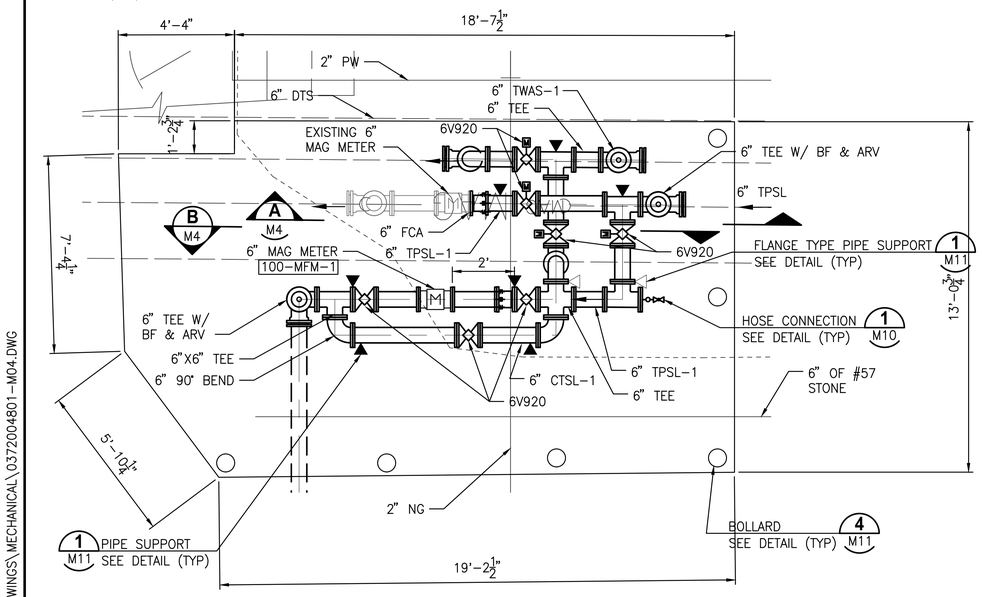

SLUDGE VALVE STATION 1 / M3

NTS

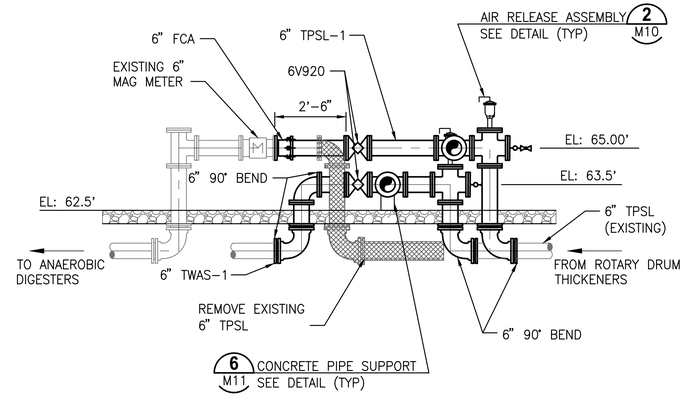

SECTION A / M4

NTS

NOTE:
1. NOT ALL PIPE SUPPORTS NOT SHOWN FOR CLARITY.

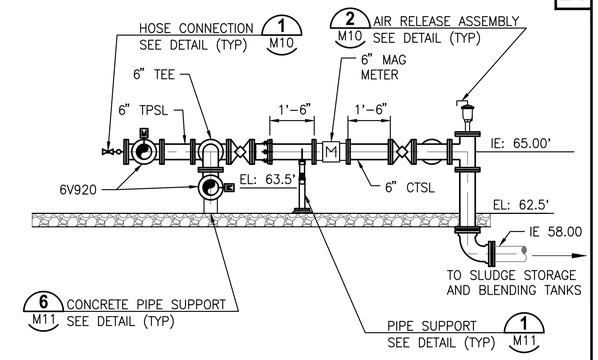

SECTION B / M4

NTS

NOTE:
1. NOT ALL PIPE SUPPORTS NOT SHOWN FOR CLARITY.

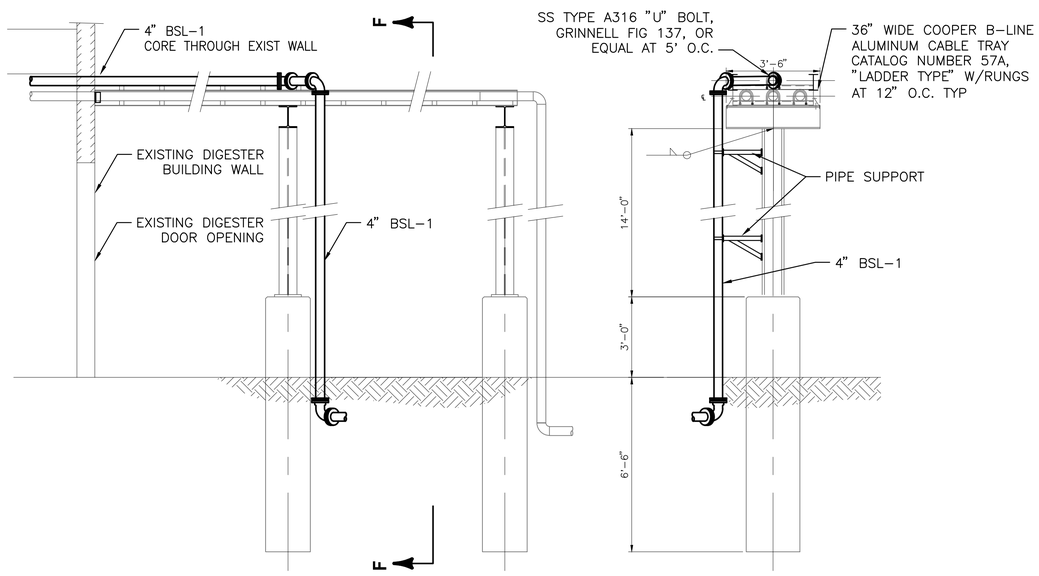

SECTION C

3/4"=1'-0" / M3

SECTION F-F

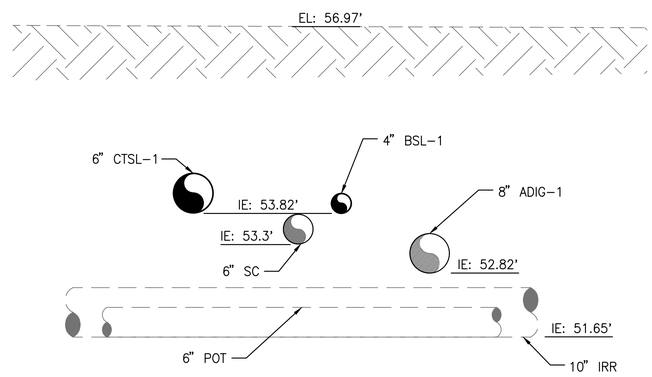

SECTION D

NTS / M2

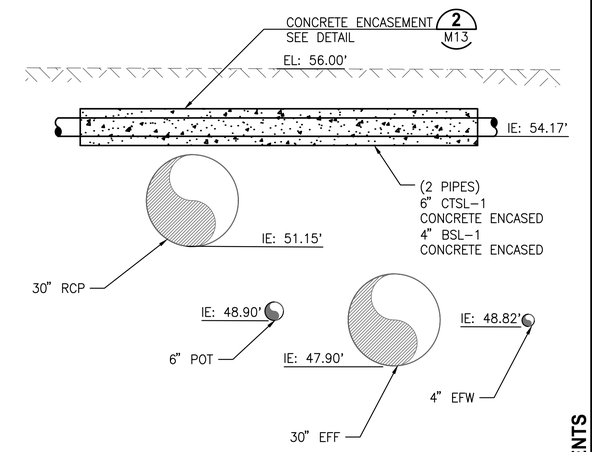

SECTION E

NTS / M2

BID DOCUMENTS

LAST SAVED: 6/13/2019 5:17 PM JKRAMER DWG LOCATION:\\TPA-MAIN\DRAFTING\03720 CLEARWATER\048-01 NE BLEND TANK IMPROVEMENTS\CONTRACT DRAWINGS\MECHANICAL\0372004801-M04.DWG

RECORD DRAWINGS		
SURVEYED BY:	DRAWN BY:	
REVIEWED BY:	PROJECT ENGINEER	DATE
APPROVED BY:	CITY ENGINEERING DIRECTOR TARA KIVETT, P.E. #86611	DATE

REVISION	BY	DATE

CITY OF CLEARWATER, FLORIDA
ENGINEERING DEPARTMENT
100 S. MYRTLE AVE.
CLEARWATER, FL 33756

INVESTIGATE BEFORE YOU EXCAVATE
CALL 811
SUNSHINE STATE ONE CALL OF FLORIDA
www.sunshine811.com
(800) 432-4770
MIN. 48 HOURS BEFORE YOU EXCAVATE

JonesEdmunds
CERTIFICATE OF AUTHORIZATION #1841
730 NE WALDO ROAD, GAINESVILLE, FLORIDA 32641 / (352) 377-5821
324 S HYDE PARK AVE, SUITE 250, TAMPA, FLORIDA 33606 / (813) 258-0703

NE WRF SLUDGE BLEND TANK IMPROVEMENTS
YARD PIPING SECTIONS AND UTILITY CONFLICT DETAILS

DWG NAME: 0372004801-M04.dwg	FIELD BOOK:	SURVEYED BY:	SCALE: VERT.
CONTRACT NO.: 14-0036-UT	DATE DRAWN: AUGUST 2019	DRAWN BY: RWADE	HORIZ. AS NOTED
JOB NO.: 03720-048-01	DESIGNED BY: DYONGE	CHECKED BY: AHOLMES	SHEET NO.: M4

APPROVED FOR CONSTRUCTION
THOMAS W. FRIEDRICH, P.E. # 61281 — DATE

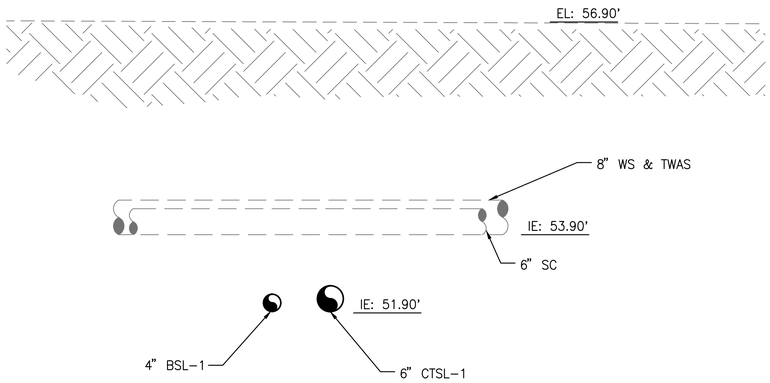

SECTION A NTS M2

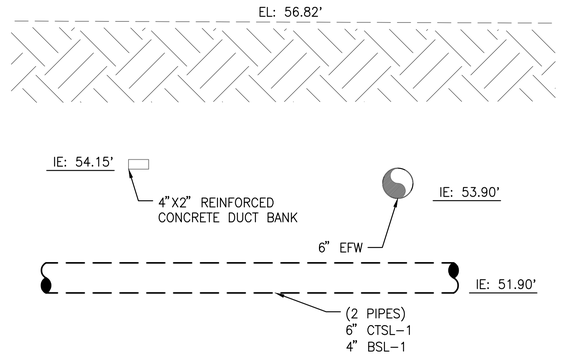

SECTION B NTS M2

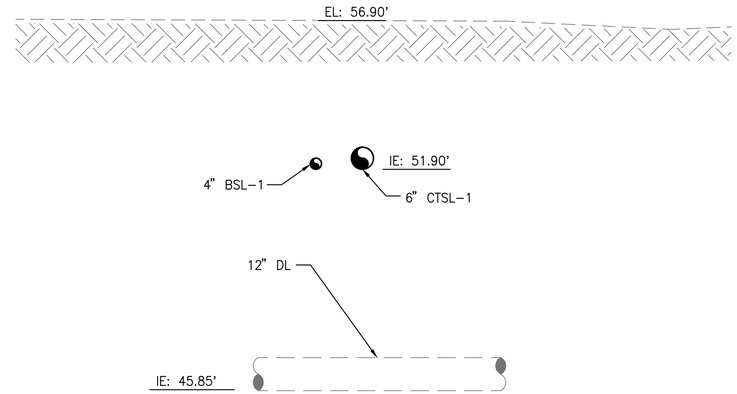

SECTION C NTS M2

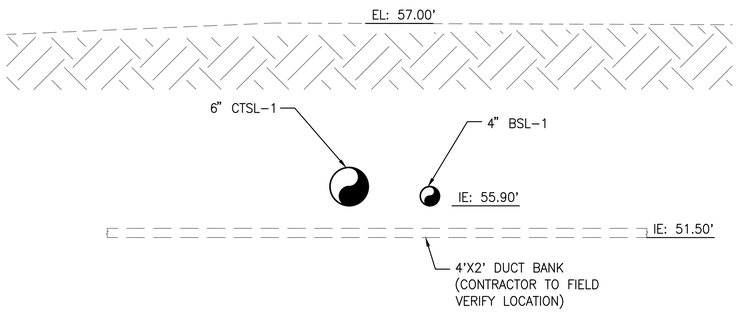

SECTION D NTS M2

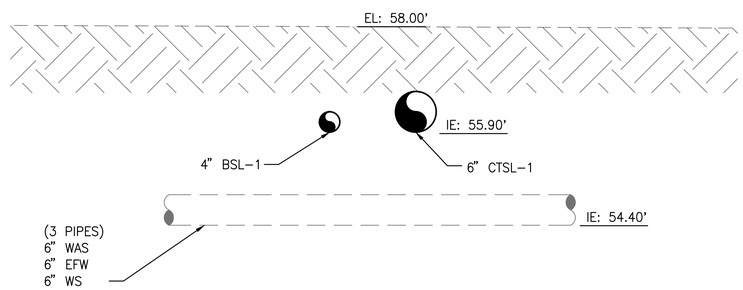

SECTION E NTS M2

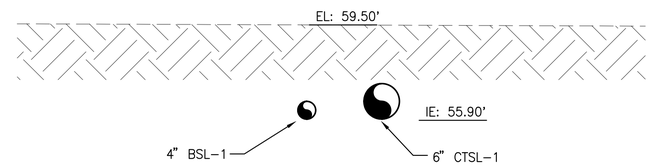

SECTION F NTS M2

BID DOCUMENTS

RECORD DRAWINGS				
SURVEYED BY:	DRAWN BY:			
REVIEWED BY:				
PROJECT ENGINEER	DATE			
APPROVED BY:				
CITY ENGINEERING DIRECTOR TARA KIVETT, P.E. #86611	DATE	REVISION	BY	DATE

CITY OF CLEARWATER, FLORIDA
ENGINEERING DEPARTMENT
100 S. MYRTLE AVE.
CLEARWATER, FL 33756

INVESTIGATE BEFORE YOU EXCAVATE
CALL 811
SUNSHINE STATE ONE CALL OF FLORIDA
www.sunshine811.com
(800) 432-4770
MIN. 48 HOURS BEFORE YOU EXCAVATE

JonesEdmunds
CERTIFICATE OF AUTHORIZATION #1841
730 NE WALDO ROAD, GAINESVILLE, FLORIDA 32641 / (352) 377-5821
324 S HYDE PARK AVE, SUITE 250, TAMPA, FLORIDA 33606 / (813) 258-0703

NE WRF SLUDGE BLEND TANK IMPROVEMENTS
UTILITY CONFLICT DETAILS

DWG NAME: 0372004801-M05.dwg	FIELD BOOK:	SURVEYED BY:	SCALE: VERT.
CONTRACT NO.: 14-0036-UT	DATE DRAWN: AUGUST 2019	DRAWN BY: RWADE	HORIZ. AS NOTED
JOB NO.: 03720-048-01	DESIGNED BY: DYONGE	CHECKED BY: AHOLMES	SHEET NO.: M5

APPROVED FOR CONSTRUCTION
THOMAS W. FRIEDRICH, P.E. # 61281 DATE

LAST SAVED: 6/13/2019 2:19 PM JKRAMER DWG LOCATION:\\TPA-MAIN\DRAFTING\03720 CLEARWATER\048-01 NE BLEND TANK IMPROVEMENTS\CONTRACT DRAWINGS\MECHANICAL\0372004801-M05.DWG

PLOT DATE: 4/20/2020 01:39 PM SEAN MENARD

NOTES:

1. REMOVE EXISTING 6" CLEANOUT AND CONNECT NEW 6" DR-1 PIPING USING EXISTING WYE FITTING.

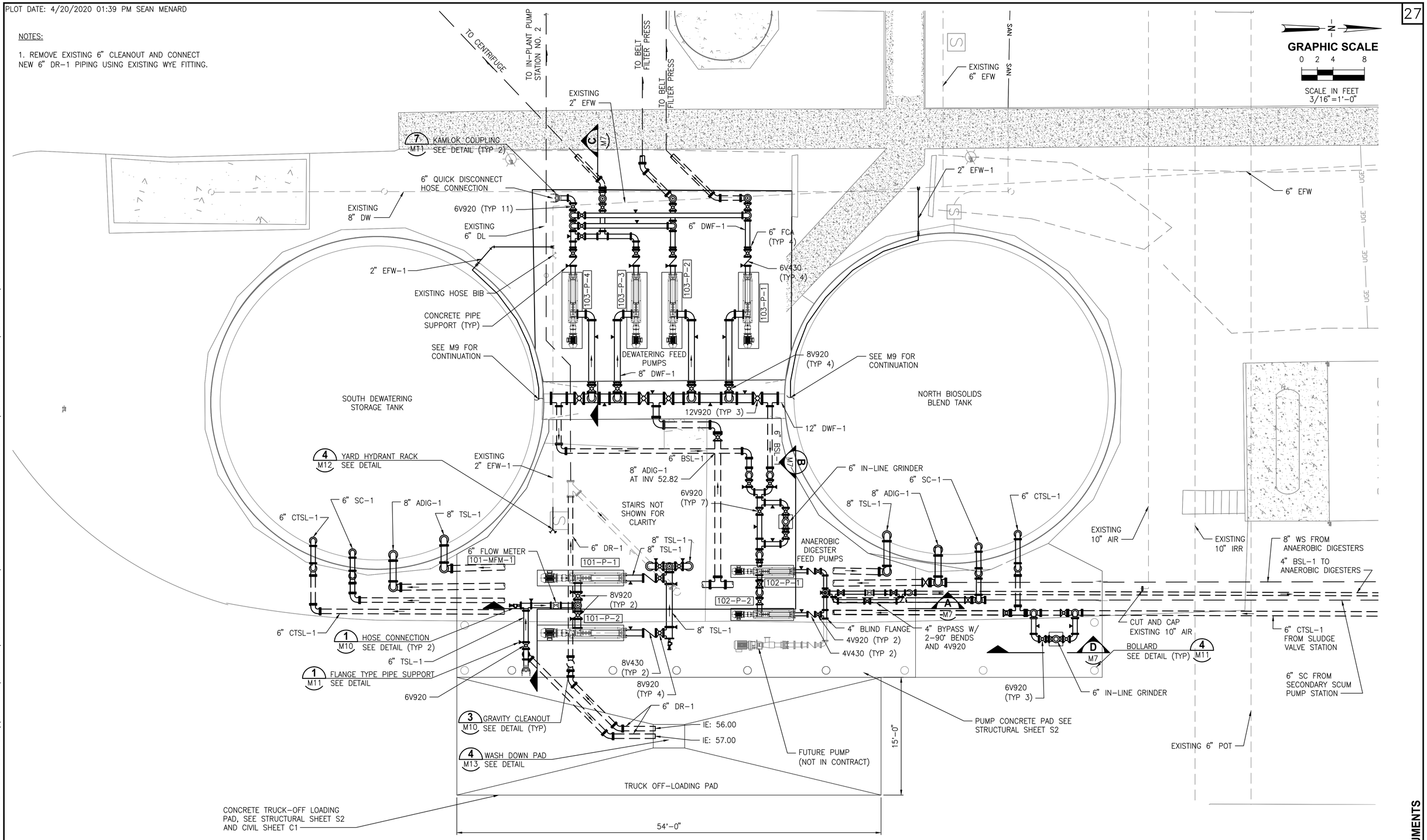

BID DOCUMENTS

LAST SAVED: 4/20/2020 1:14 PM SMENARD DWG LOCATION:\\TPA-MAIN\DRAFTING\03720 CLEARWATER\048-01 NE BLEND TANK IMPROVEMENTS\CONTRACT DRAWINGS\MECHANICAL\0372004801-M06.DWG

RECORD DRAWINGS
SURVEYED BY: DRAWN BY:
REVIEWED BY: PROJECT ENGINEER DATE
APPROVED BY: CITY ENGINEERING DIRECTOR TARA KIVETT, P.E. #86611 DATE

REVISION | BY | DATE

CITY OF CLEARWATER, FLORIDA
ENGINEERING DEPARTMENT
100 S. MYRTLE AVE.
CLEARWATER, FL 33756

INVESTIGATE BEFORE YOU EXCAVATE
CALL 811
SUNSHINE STATE ONE CALL OF FLORIDA
www.sunshine811.com
(800) 432-4770
MIN. 48 HOURS BEFORE YOU EXCAVATE

JonesEdmunds
CERTIFICATE OF AUTHORIZATION #1841
730 NE WALDO ROAD, GAINESVILLE, FLORIDA 32641 / (352) 377-5821
324 S HYDE PARK AVE, SUITE 250, TAMPA, FLORIDA 33606 / (813) 258-0703

NE WRF SLUDGE BLEND TANK IMPROVEMENTS
SLUDGE PUMP STATION

DWG NAME: 0372004801-M06.dwg	FIELD BOOK:	SURVEYED BY:	SCALE: VERT.
CONTRACT NO.: 14-0036-UT	DATE DRAWN: AUGUST 2019	DRAWN BY: RWADE	HORIZ. AS NOTED
JOB NO.: 03720-048-01	DESIGNED BY: DYONGE	CHECKED BY: AHOLMES	SHEET NO.: M6
APPROVED FOR CONSTRUCTION	THOMAS W. FRIEDRICH, P.E. # 61281		DATE

GRAPHIC SCALE
0 1 2 4
SCALE IN FEET
3/8"=1'-0"

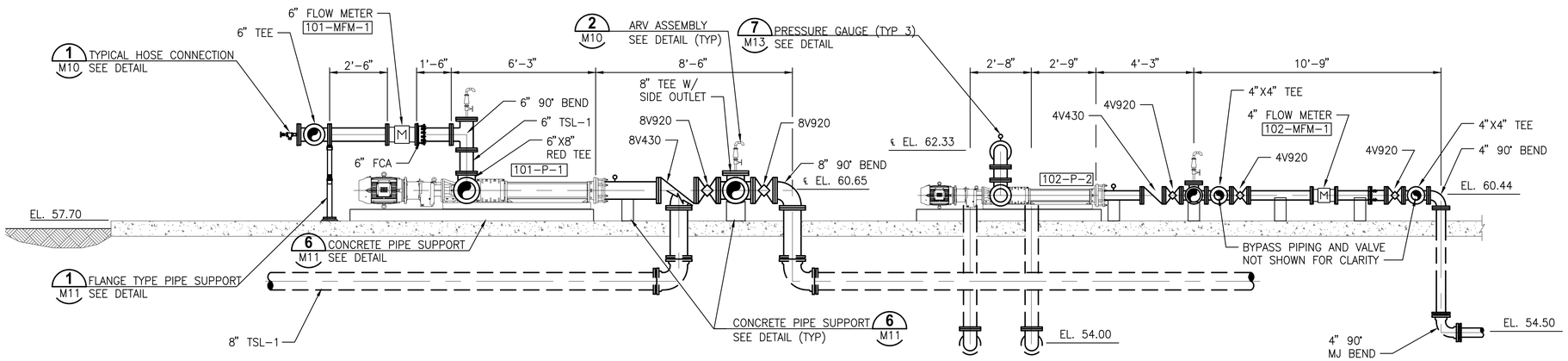

SECTION A
3/8"=1'-0" M6

NOTE:
1. NOT ALL PIPE SUPPORTS SHOWN FOR CLARITY.

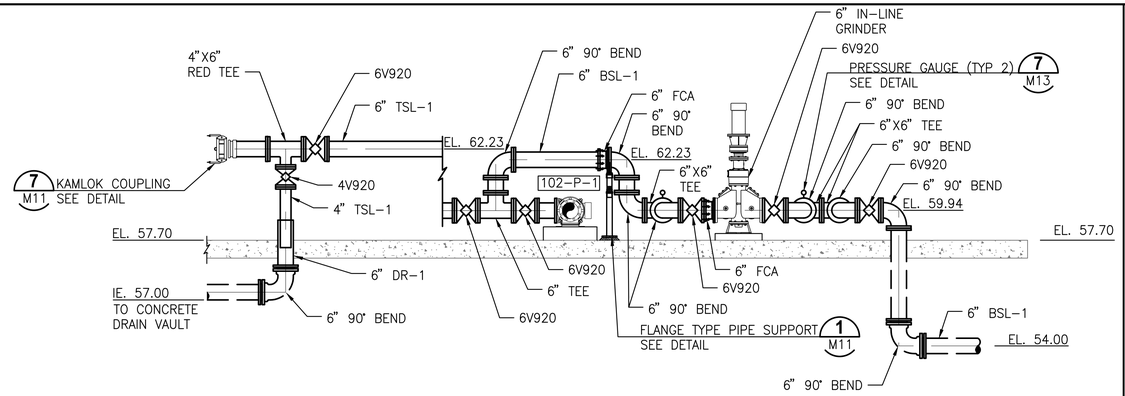

SECTION B
3/8"=1'-0" M6

NOTE:
1. NOT ALL PIPE SUPPORTS SHOWN FOR CLARITY.

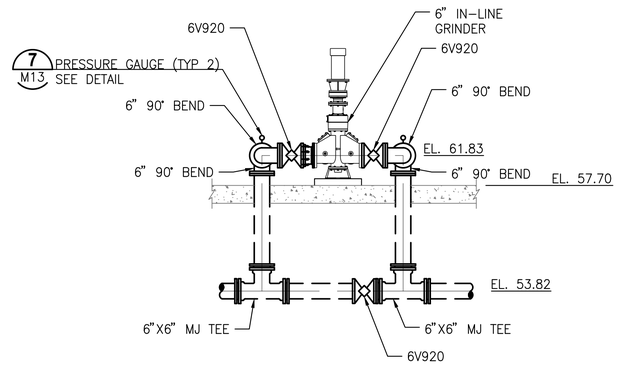

SECTION D
3/8"=1'-0" M6

NOTE:
1. NOT ALL PIPE SUPPORTS SHOWN FOR CLARITY.

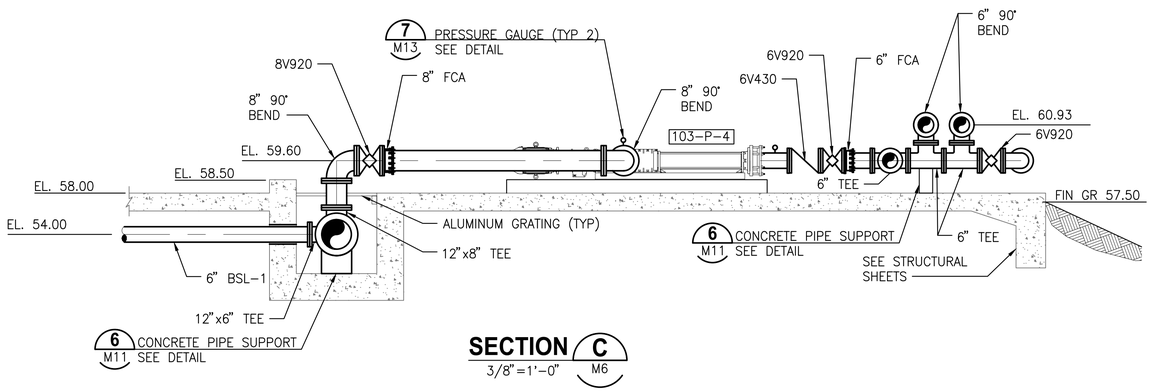

SECTION C
3/8"=1'-0" M6

NOTE:
1. NOT ALL PIPE SUPPORTS SHOWN FOR CLARITY.

BID DOCUMENTS

RECORD DRAWINGS
SURVEYED BY: DRAWN BY:
REVIEWED BY: PROJECT ENGINEER DATE
APPROVED BY: CITY ENGINEERING DIRECTOR TARA KIVETT, P.E. #86611 DATE

REVISION	BY	DATE

CITY OF CLEARWATER, FLORIDA
ENGINEERING DEPARTMENT
100 S. MYRTLE AVE.
CLEARWATER, FL 33756

INVESTIGATE BEFORE YOU EXCAVATE
CALL 811
SUNSHINE STATE ONE CALL OF FLORIDA
www.sunshine811.com
(800) 432-4770
MIN. 48 HOURS BEFORE YOU EXCAVATE

JonesEdmunds
CERTIFICATE OF AUTHORIZATION #1841
730 NE WALDO ROAD, GAINESVILLE, FLORIDA 32641 / (352) 377-5821
324 S HYDE PARK AVE, SUITE 250, TAMPA, FLORIDA 33606 / (813) 258-0703

NE WRF SLUDGE BLEND TANK IMPROVEMENTS
SLUDGE PUMP STATION SECTIONS

DWG NAME: 0372004801-M07.dwg	FIELD BOOK:	SURVEYED BY:	SCALE: VERT.
CONTRACT NO.: 14-0036-UT	DATE DRAWN: AUGUST 2019	DRAWN BY: RWADE	HORIZ. AS NOTED
JOB NO.: 03720-048-01	DESIGNED BY: DYONGE	CHECKED BY: AHOLMES	SHEET NO.: M7

APPROVED FOR CONSTRUCTION
THOMAS W. FRIEDRICH, P.E. # 61281 DATE

LAST SAVED: 4/20/2020 1:27 PM SMENARD DWG LOCATION:\\TPA-MAIN\DRAFTING\03720 CLEARWATER\048-01 NE BLEND TANK IMPROVEMENTS\CONTRACT DRAWINGS\MECHANICAL\0372004801-M07.DWG

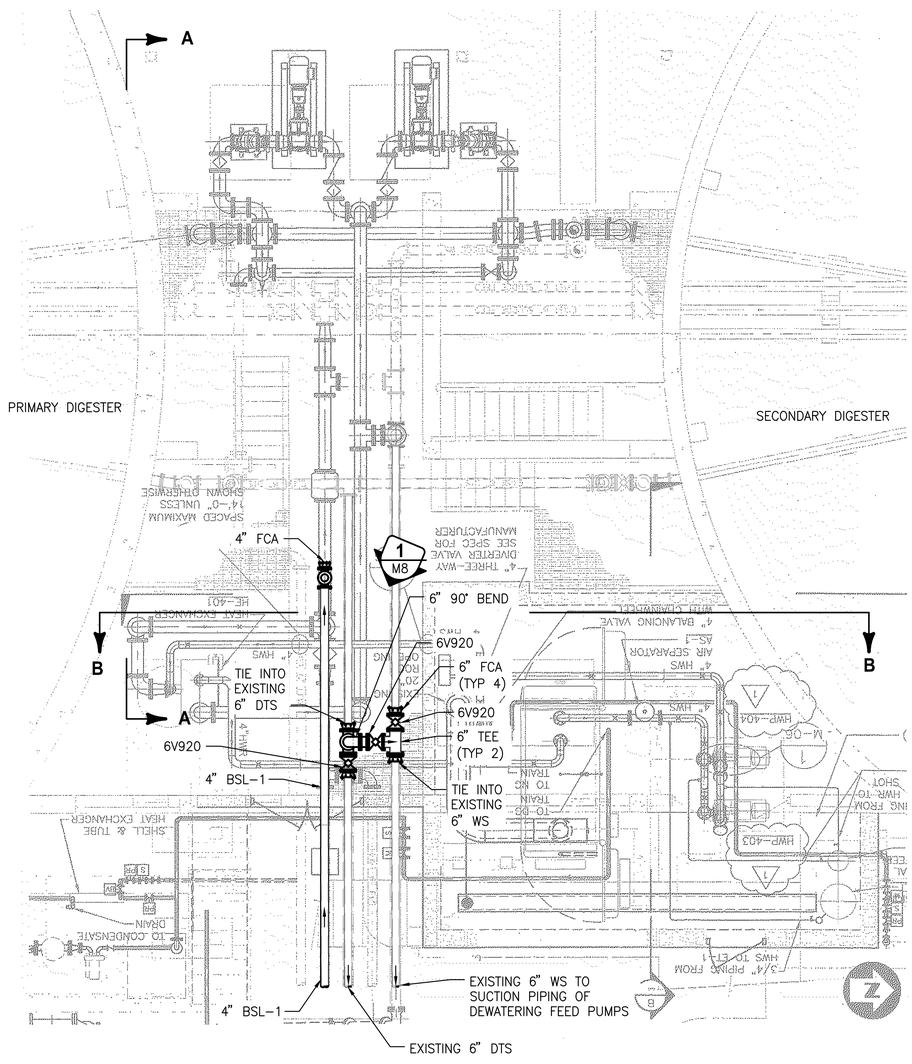

DIGESTER PIPING MODIFICATIONS DETAIL 1 / M8

1/4"=1'-0"

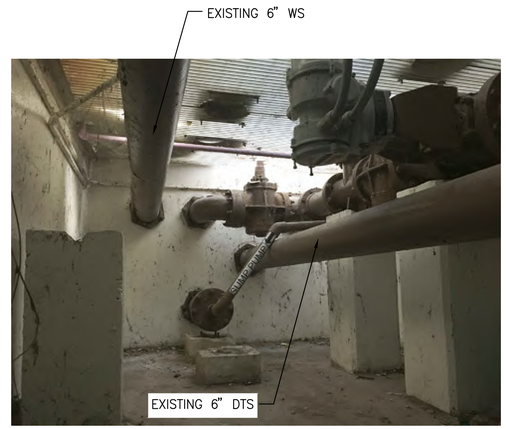

PHOTO DETAIL 1

NTS

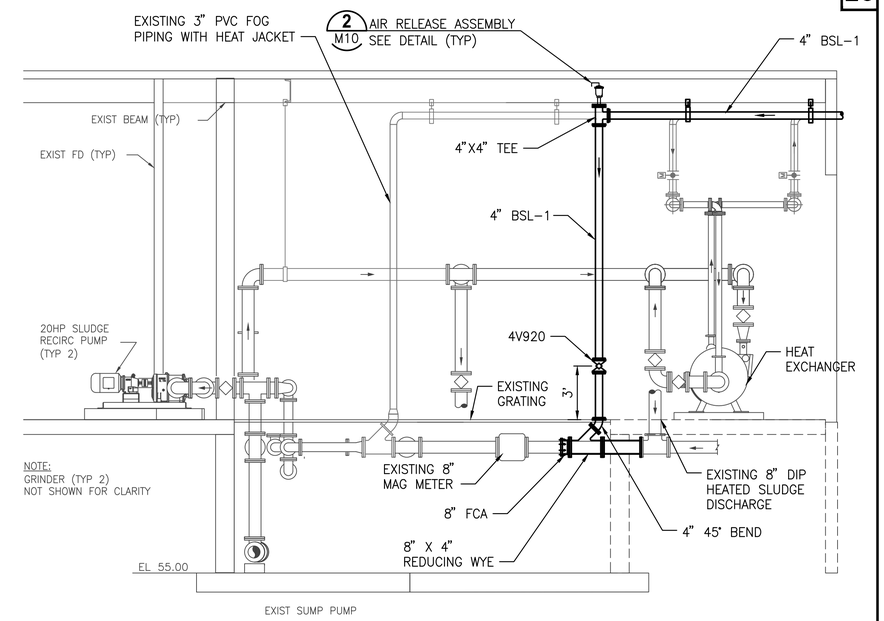

SECTION A-A

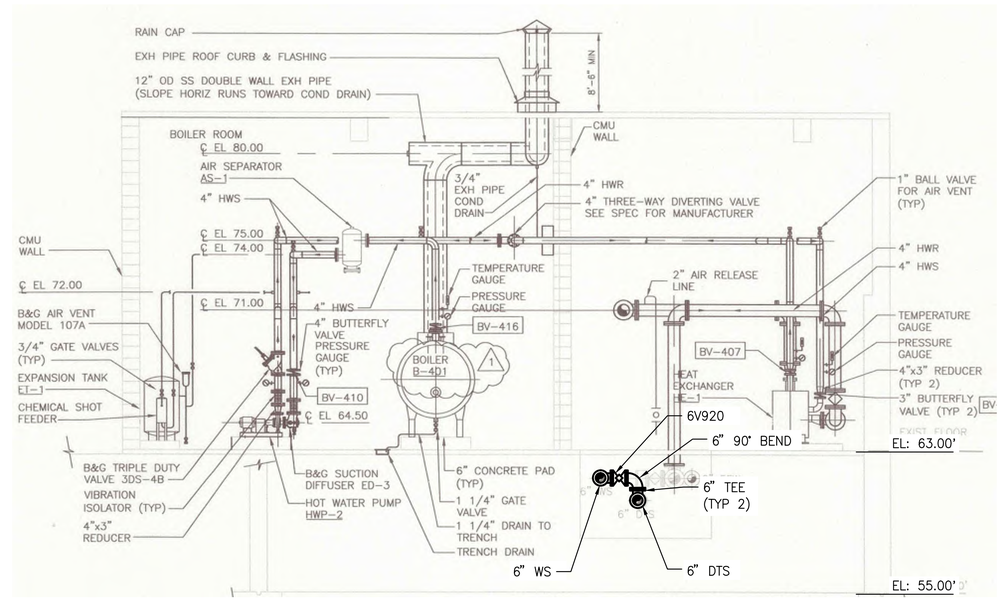

SECTION B-B

BID DOCUMENTS

RECORD DRAWINGS		
SURVEYED BY:	DRAWN BY:	
REVIEWED BY:	PROJECT ENGINEER	DATE
APPROVED BY:	CITY ENGINEERING DIRECTOR TARA KIVETT, P.E. #86611	DATE

REVISION	BY	DATE

CITY OF CLEARWATER, FLORIDA
ENGINEERING DEPARTMENT
100 S. MYRTLE AVE.
CLEARWATER, FL 33756

INVESTIGATE BEFORE YOU EXCAVATE
CALL 811
SUNSHINE STATE ONE CALL OF FLORIDA
www.sunshine811.com
(800) 432-4770
MIN. 48 HOURS BEFORE YOU EXCAVATE

JonesEdmunds
CERTIFICATE OF AUTHORIZATION #1841
730 NE WALDO ROAD, GAINESVILLE, FLORIDA 32641 / (352) 377-5821
324 S HYDE PARK AVE, SUITE 250, TAMPA, FLORIDA 33606 / (813) 258-0703

NE WRF SLUDGE BLEND
TANK IMPROVEMENTS
DIGESTER PIPING
MODIFICATIONS

DWG NAME: 0372004801-M08.dwg	FIELD BOOK:	SURVEYED BY:	SCALE: VERT. HORIZ. AS NOTED
CONTRACT NO.: 14-0036-UT	DATE DRAWN: AUGUST 2019	DRAWN BY: RWADE	
JOB NO.: 03720-048-01	DESIGNED BY: DYONGE	CHECKED BY: AHOLMES	SHEET NO.: M8
APPROVED FOR CONSTRUCTION	THOMAS W. FRIEDRICH, P.E. # 61281		DATE

LAST SAVED: 6/17/2019 2:29 PM JKRAMER DWG LOCATION:\\TPA-MAIN\DRAFTING\03720 CLEARWATER\048-01 NE BLEND TANK IMPROVEMENTS\CONTRACT DRAWINGS\MECHANICAL\0372004801-M08.DWG

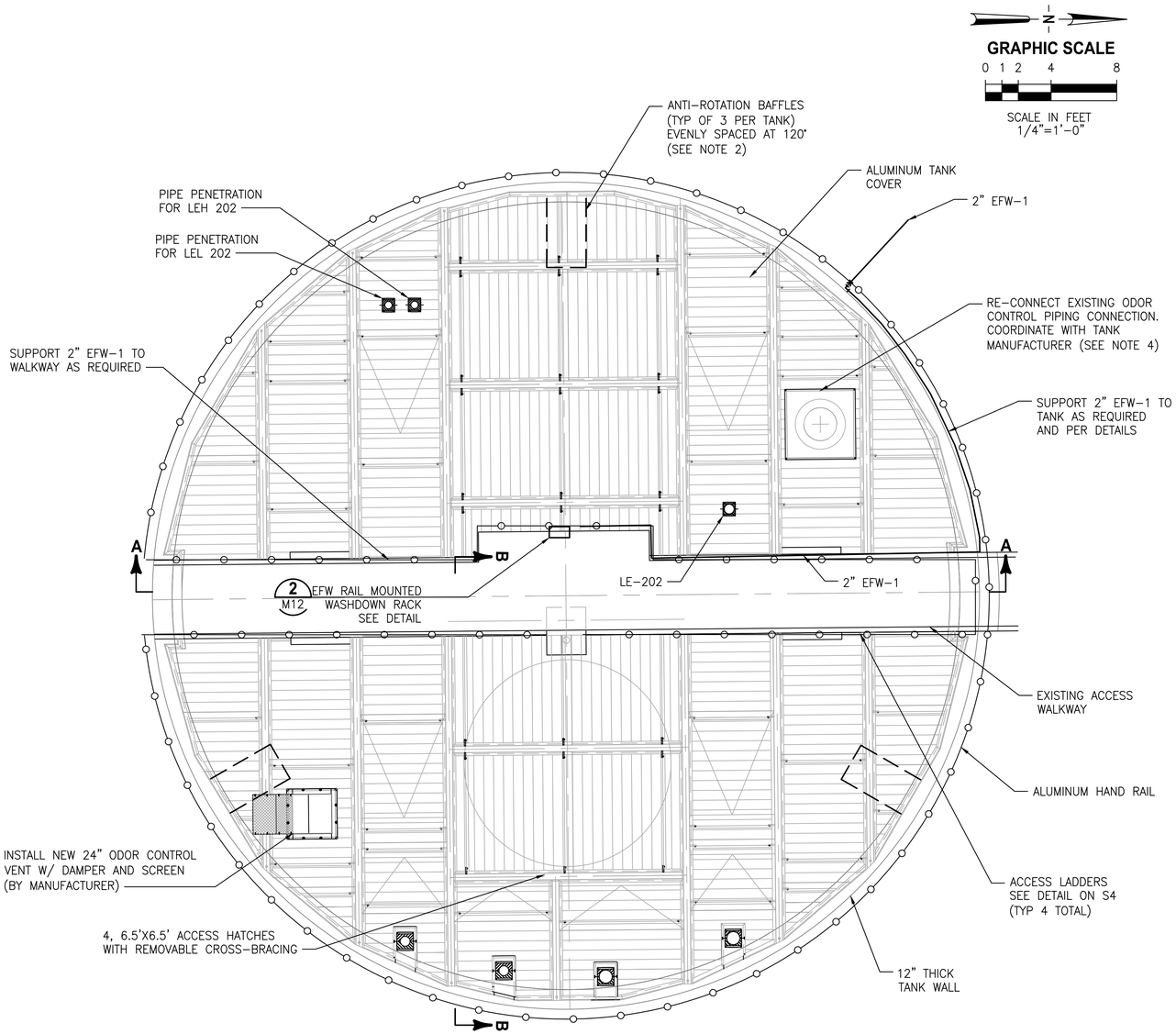

PLAN

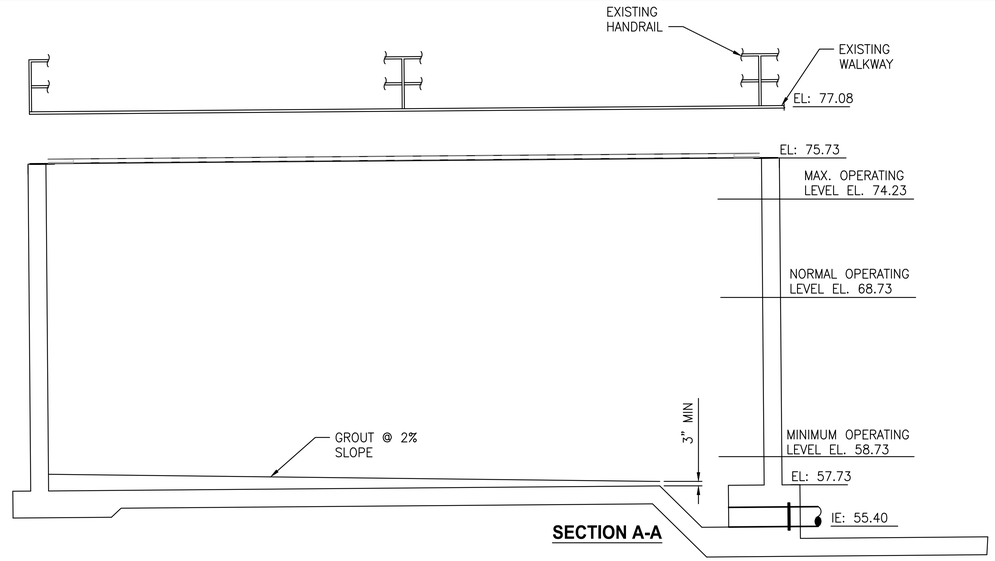

SECTION A-A

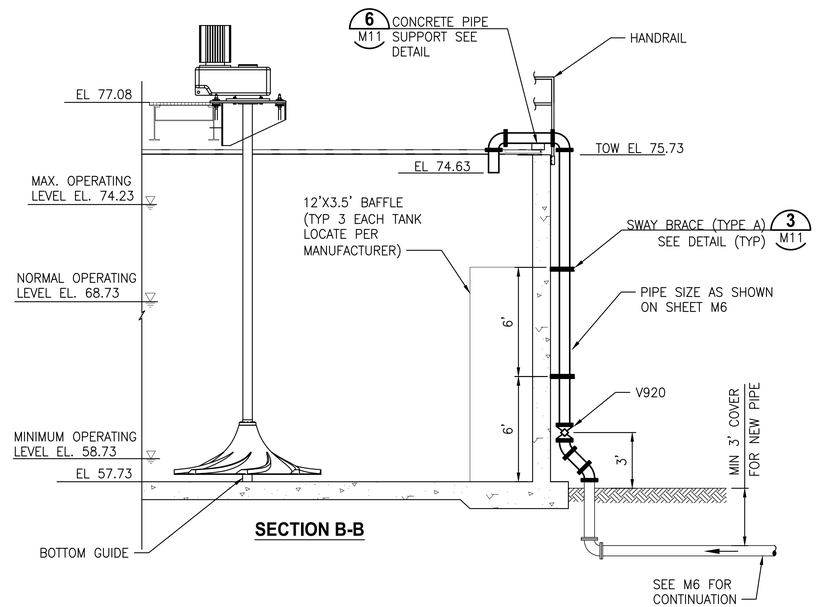

SECTION B-B

NOTES:

1. FOR DETAILS ON WALKWAY, ACCESS LADDERS, AND TANK COVER, SEE STRUCTURAL SHEETS.
2. CONTRACTOR TO COORDINATE WITH MIXER MANUFACTURER FOR DETAILS ON BAFFLE MOUNTING.
3. CONTRACTOR TO COORDINATE ALL PIPE PENETRATIONS WITH COVER MANUFACTURER.
4. CONTRACTOR TO PROVIDE ADDITIONAL FRP PIPING TO RECONNECT EXISTING FRP ODOR CONTROL DUCT (2 LOCATIONS).
5. CONTRACTOR TO COORDINATE WITH MIXER MANUFACTURER ON BOTTOM GUIDE LOCATION AND INSTALLATION.
6. CONTRACTOR SHALL PROVIDE STRUCTURAL CALCULATIONS FOR COVER. CALCULATIONS SHALL BE SIGNED AND SEALED BY AN ENGINEER LICENSED IN THE STATE OF FLORIDA.
7. CONTRACTOR SHALL COAT TANK INTERIOR WALLS AND GROUTED FLOOR IN ACCORDANCE WITH SECTION 03180, CONCRETE COATING SYSTEM

SOUTH BIOSOLIDS BLEND TANK
(MIRRORED FOR NORTH DEWATERING STORAGE TANK)

BID DOCUMENTS

LAST SAVED: 5/1/2020 11:26 AM SMENARD DWG LOCATION:\\TPA-MAIN\DRAFTING\03720 CLEARWATER\048-01 NE BLEND TANK IMPROVEMENTS\CONTRACT DRAWINGS\MECHANICAL\0372004801-M09.DWG

RECORD DRAWINGS
SURVEYED BY: DRAWN BY:
REVIEWED BY: PROJECT ENGINEER DATE
APPROVED BY: CITY ENGINEERING DIRECTOR TARA KIVETT, P.E. #86611 DATE

REVISION	BY	DATE

CITY OF CLEARWATER, FLORIDA
ENGINEERING DEPARTMENT
100 S. MYRTLE AVE.
CLEARWATER, FL 33756

INVESTIGATE BEFORE YOU EXCAVATE
CALL 811
SUNSHINE STATE ONE CALL OF FLORIDA
www.sunshine811.com
(800) 432-4770
MIN. 48 HOURS BEFORE YOU EXCAVATE

JonesEdmunds
CERTIFICATE OF AUTHORIZATION #1841
730 NE WALDO ROAD, GAINESVILLE, FLORIDA 32641 / (352) 377-5821
324 S HYDE PARK AVE, SUITE 250, TAMPA, FLORIDA 33606 / (813) 258-0703

NE WRF SLUDGE BLEND TANK IMPROVEMENTS
SLUDGE STORAGE AND BLENDING TANK PLAN, SECTION AND DETAILS

DWG NAME: 0372004801-M09.dwg	FIELD BOOK:	SURVEYED BY:	SCALE: VERT.
CONTRACT NO.: 14-0036-UT	DATE DRAWN: AUGUST 2019	DRAWN BY: RWADE	HORIZ. AS NOTED
JOB NO.: 03720-048-01	DESIGNED BY: DYONGE	CHECKED BY: AHOLMES	SHEET NO.: M9

APPROVED FOR CONSTRUCTION
THOMAS W. FRIEDRICH, P.E. # 61281 DATE

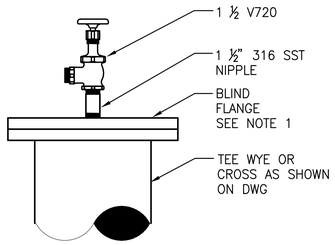

NOTE:
1. DRILL AND TAP FLANGE FOR 1 1/2" NPT NIPPLE.

TYPICAL HOSE CONNECTION DETAIL 1
NTS

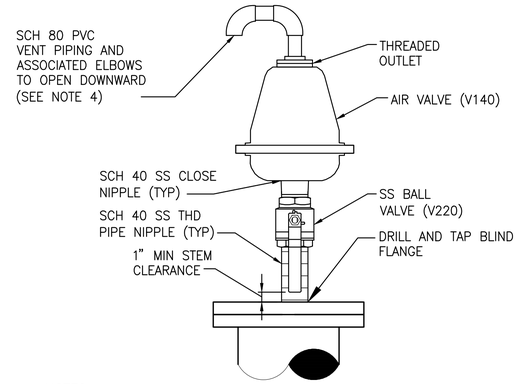

NOTES:
1. SEE DRAWINGS FOR AIR VALVE INLET DIAMETER.
2. BALL VALVE AND NIPPLES SHALL HAVE THE SAME DIAMETER AS THE AIR VALVE INLET.
3. VERIFY SIZE OF VALVE PRIOR TO ORDERING ANCILLARY PARTS, DRILLING OR TAPPING.
4. UNLESS NOTED OTHERWISE, EXTEND VENT PIPING TO 6" AFF, AND ROUTE TO 12" DWF-1 PIPE TRENCH. PROVIDE SS BUG SCREEN, AND UNI-STRUT SUPPORT.

AIR RELEASE ASSEMBLY DETAIL 2
NTS

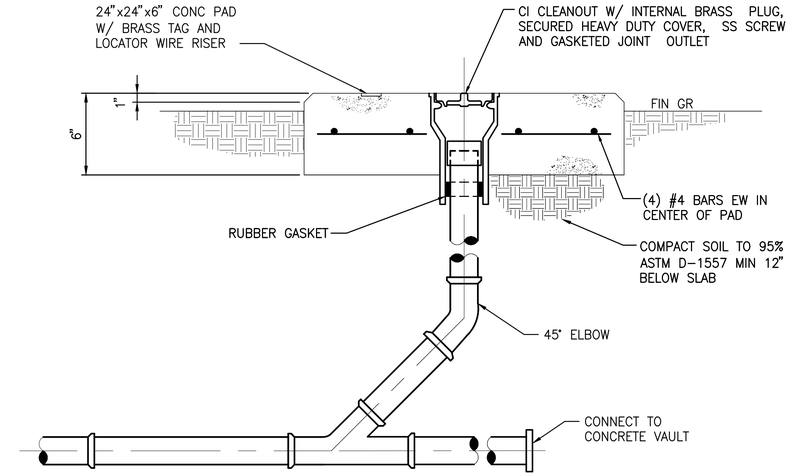

GRAVITY CLEANOUT DETAIL 3
NTS

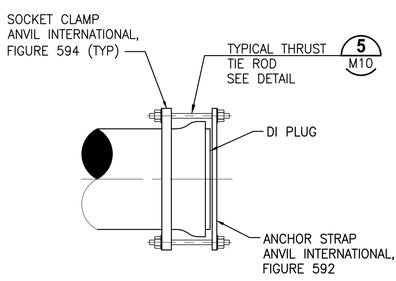

TYPICAL RESTRAINED PLUG DETAIL 4
NTS

TIE ROD SCHEDULE

TEST PRESSURE		25 PSI		50 PSI		100 PSI	
PIPE DIAMETER (IN)	MINIMUM PIPE WALL THICKNESS (IN)	TIE RODS		TIE RODS		TIE RODS	
		DIA (IN)	NO REQ'D	DIA (IN)	NO REQ'D	DIA (IN)	NO REQ'D
6	3/16	–	–	–	–	5/8	2
8	3/16	–	–	–	–	5/8	2
10	3/16	–	–	–	–	5/8	2
12	3/16	5/8	2	5/8	2	5/8	2
14	3/16	5/8	2	5/8	2	3/4	2
16	3/16	5/8	2	5/8	2	3/4	2
18	1/4	5/8	2	5/8	2	7/8	2
20	1/4	5/8	2	3/4	2	7/8	2
22	1/4	5/8	2	3/4	2	3/4	4
24	1/4	5/8	2	3/4	2	7/8	4
30	1/4	5/8	4	3/4	4	7/8	6
36	1/4	3/4	4	7/8	4	1	6
42	1/4	3/4	4	1	4	1	8
48	5/16	7/8	4	7/8	8	1	10

NOTES:
1. TIE RODS SHALL CONFORM TO ASTM A193 GRADE B7.
2. NUTS SHALL CONFORM TO ASTM A194 GRADE 2H.
3. TIE RODS SHALL BE TIGHTENED GRADUALLY AND EQUALLY IN STAGES TO PREVENT UNEVEN ALIGNMENT AND TO ALLOW EQUAL STRESS ON ALL TIE RODS UNDER PRESSURE. TIGHTEN UNTIL SNUG. THREADS SHALL PROTRUDE FROM NUTS. PEEN THREADS AFTER TIGHTENING NUTS.
4. TIE RODS SHALL BE SPACED EQUALLY AROUND PIPE.
5. CONTRACTOR SHALL USE DATA FOR ONLY THOSE PIPE SIZES AND TEST PRESSURES SPECIFIED IN THIS CONTRACT.
6. PAINT TIE RODS AND BOLTS IN ACCORDANCE WITH SPECIFICATION SECTION "PAINTING AND COATINGS" SYSTEMS.

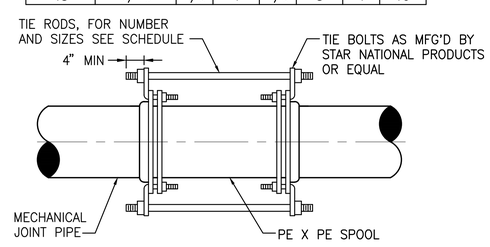

MECHANICAL JOINT PIPE

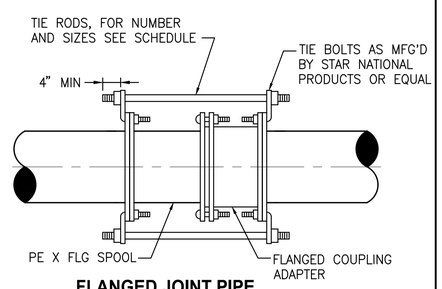

FLANGED JOINT PIPE

TYPICAL THRUST TIE ROD DETAIL 5
NTS

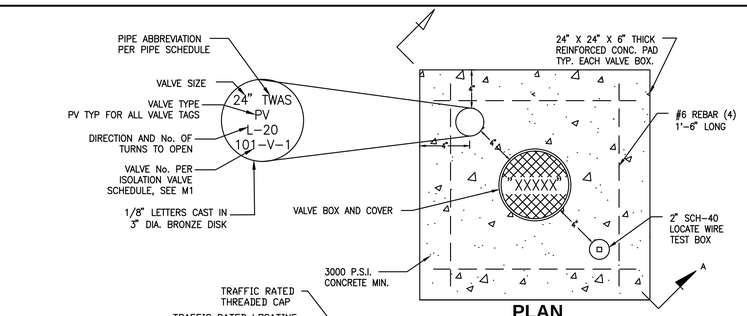

PLAN

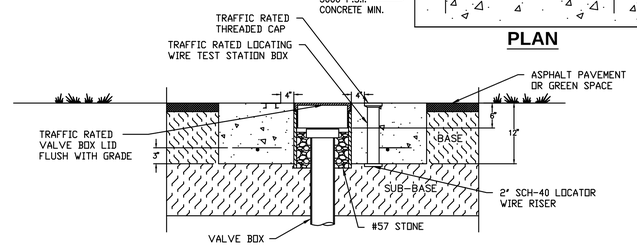

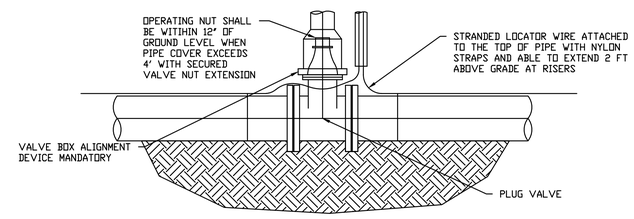

SECTION A-A

VALVE BOX AND COVER DETAIL 6
NTS

BID DOCUMENTS

LAST SAVED: 6/17/2019 2:33 PM JKRAMER DWG LOCATION:\\TPA-MAIN\DRAFTING\03720 CLEARWATER\048-01 NE BLEND TANK IMPROVEMENTS\CONTRACT DRAWINGS\MECHANICAL\0372004801-M10.DWG

RECORD DRAWINGS
SURVEYED BY: DRAWN BY:
REVIEWED BY: PROJECT ENGINEER DATE
APPROVED BY: CITY ENGINEERING DIRECTOR TARA KIVETT, P.E. #86611 DATE

REVISION | BY | DATE

CITY OF CLEARWATER, FLORIDA
ENGINEERING DEPARTMENT
100 S. MYRTLE AVE.
CLEARWATER, FL 33756

INVESTIGATE BEFORE YOU EXCAVATE
CALL 811
SUNSHINE STATE ONE CALL OF FLORIDA
www.sunshine811.com
(800) 432-4770
MIN. 48 HOURS BEFORE YOU EXCAVATE

JonesEdmunds
CERTIFICATE OF AUTHORIZATION #1841
730 NE WALDO ROAD, GAINESVILLE, FLORIDA 32641 / (352) 377-5821
324 S HYDE PARK AVE, SUITE 250, TAMPA, FLORIDA 33606 / (813) 258-0703

NE WRF SLUDGE BLEND TANK IMPROVEMENTS
MECHANICAL DETAILS (1)

DWG NAME: 0372004801-M10.dwg	FIELD BOOK:	SURVEYED BY:	SCALE: VERT.
CONTRACT NO.: 14-0036-UT	DATE DRAWN: AUGUST 2019	DRAWN BY: RWADE	HORIZ. AS NOTED
JOB NO.: 03720-048-01	DESIGNED BY: DYONGE	CHECKED BY: AHOLMES	SHEET NO.: M10

APPROVED FOR CONSTRUCTION
THOMAS W. FRIEDRICH, P.E. # 61281 DATE

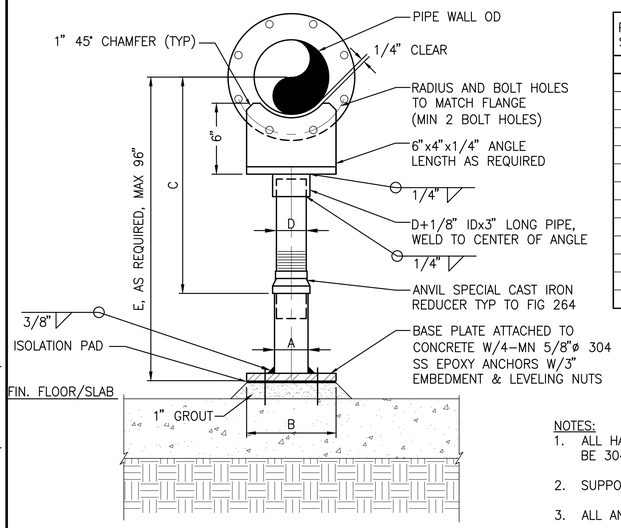

PIPE SIZE	A	B	C MIN	C MAX	D
INCHES					
4	4	9	9 1/4	14	3
5	4	9	10	14 3/4	3
6	4	9	10 1/2	15 1/4	3
8	4	9	11 3/4	16 1/2	3
10	4	9	13 1/2	18 1/4	3
12	4	9	15	19 3/4	3
14	4	11	16 1/4	20 3/4	3
16	4	11	17 3/4	22 1/4	3
18	6	13 1/2	19 1/2	24	4
20	6	13 1/2	21	25 1/2	4
24	6	13 1/2	23 3/4	28 1/4	4
30	6	13 1/2	27	31 1/2	4
36	6	16	30	36	4

TYPICAL PIPE SUPPORT DIMENSION TABLE

NOTES:
1. ALL HARDWARE, PLATE, SADDLE, ETC, SHALL BE 304 SERIES SS.
2. SUPPORT PIPE SHALL BE 304 SS.
3. ALL ANCHOR BOLTS SHALL BE 304 SS.

TYPICAL FLANGE TYPE PIPE SUPPORT DETAIL 1

NTS

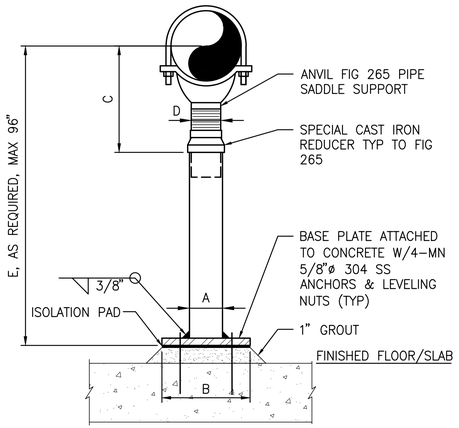

NOTES:
1. REFER TO DETAIL 1/M11 FOR TYPICAL PIPE SUPPORT DIMENSION TABLE
2. ALL HARDWARE, PLATE, SADDLE, ETC, SHALL BE 304 SERIES SS.
3. SUPPORT PIPE SHALL BE 304 SS.
4. ALL ANCHOR BOLTS SHALL BE 304 SS.

TYPICAL ADJUSTABLE HEIGHT SADDLE WITH YOKE TYPE PIPE SUPPORT DETAIL 2

NTS

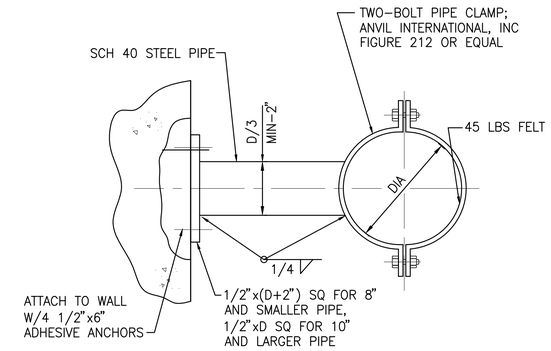

PLAN

NOTES:
1. ALL HARDWARE, PLATE, SADDLE, ETC, SHALL BE 304 SERIES SS.
2. SUPPORT PIPE SHALL BE 304 SS.
3. ALL ANCHOR BOLTS SHALL BE 304 SS.

TYPICAL SWAY BRACE (TYPE A) DETAIL 3

NTS

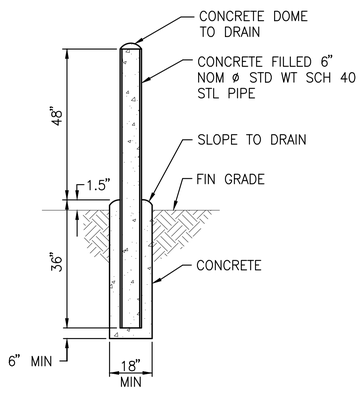

NOTES:
A. ACTUAL INSTALLATION LOCATION OF EACH BOLLARD SHALL BE AS SHOWN ON THE DRAWINGS OR AS DIRECTED IN THE FIELD.
B. PAINT ALL PIPING MATERIALS OSHA SAFETY YELLOW.

BOLLARD DETAIL 4

NTS

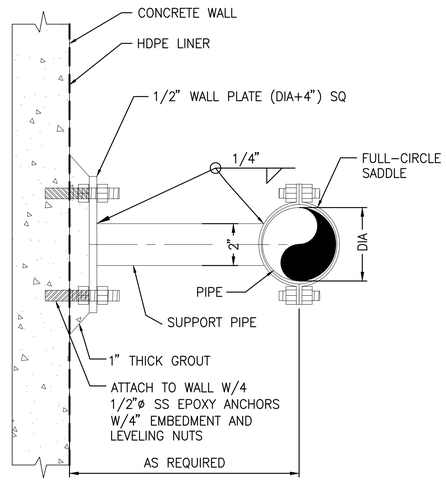

NOTES:
1. ALL HARDWARE, PLATE, SADDLE, ETC, SHALL BE 304 SERIES SS.
2. SUPPORT PIPE SHALL BE 304 SS.
3. ALL ANCHOR BOLTS SHALL BE 304 SS.

TYPICAL WALL MOUNTED PIPE SUPPORT (TOP VIEW) DETAIL 5

NTS

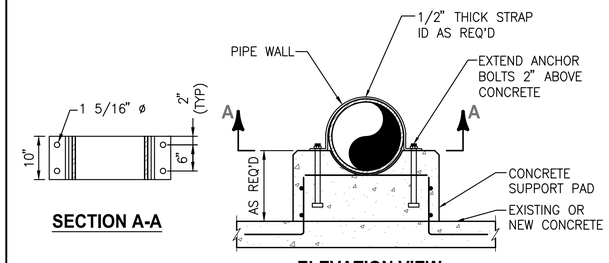

SECTION A-A

ELEVATION VIEW

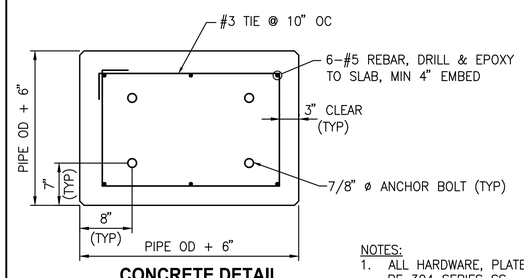

CONCRETE DETAIL

NOTES:
1. ALL HARDWARE, PLATE, SADDLE, ETC, SHALL BE 304 SERIES SS.
2. SUPPORT PIPE SHALL BE 304 SS.
3. ALL ANCHOR BOLTS SHALL BE 304 SS.

TYPICAL CONCRETE PIPE SUPPORT DETAIL 6

NTS

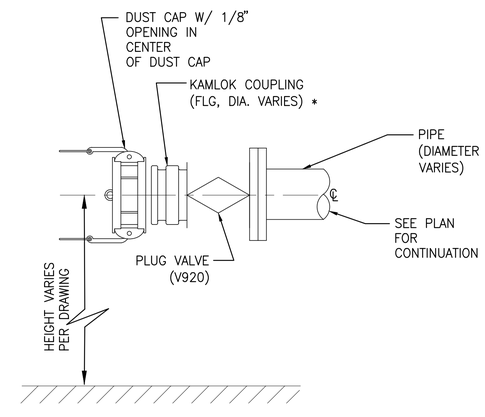

* NOTE: SIZE KAMLOK TO MATCH PIPE SIZE

KAMLOK COUPLING (ABOVE GRADE) DETAIL (TYP) 7

NTS

BID DOCUMENTS

LAST SAVED: 6/12/2019 8:49 PM CAUTODESK DWG LOCATION:\\TPA-MAIN\DRAFTING\03720 CLEARWATER\048-01 NE BLEND TANK IMPROVEMENTS\CONTRACT DRAWINGS\MECHANICAL\0372004801-M11.DWG

RECORD DRAWINGS
SURVEYED BY: DRAWN BY:
REVIEWED BY: PROJECT ENGINEER DATE
APPROVED BY: CITY ENGINEERING DIRECTOR TARA KIVETT, P.E. #86611 DATE

REVISION | BY | DATE

CITY OF CLEARWATER, FLORIDA
ENGINEERING DEPARTMENT
100 S. MYRTLE AVE.
CLEARWATER, FL 33756

INVESTIGATE BEFORE YOU EXCAVATE
CALL 811
SUNSHINE STATE ONE CALL OF FLORIDA
www.sunshine811.com
(800) 432-4770
MIN. 48 HOURS BEFORE YOU EXCAVATE

JonesEdmunds
CERTIFICATE OF AUTHORIZATION #1841
730 NE WALDO ROAD, GAINESVILLE, FLORIDA 32641 / (352) 377-5821
324 S HYDE PARK AVE, SUITE 250, TAMPA, FLORIDA 33606 / (813) 258-0703

NE WRF SLUDGE BLEND TANK IMPROVEMENTS
MECHANICAL DETAILS (2)

DWG NAME: 0372004801-M11.dwg	FIELD BOOK:	SURVEYED BY:	SCALE: VERT.
CONTRACT NO.: 14-0036-UT	DATE DRAWN: AUGUST 2019	DRAWN BY: RWADE	HORIZ. AS NOTED
JOB NO.: 03720-048-01	DESIGNED BY: DYONGE	CHECKED BY: AHOLMES	SHEET NO.: M11
APPROVED FOR CONSTRUCTION	THOMAS W. FRIEDRICH, P.E. # 61281		DATE

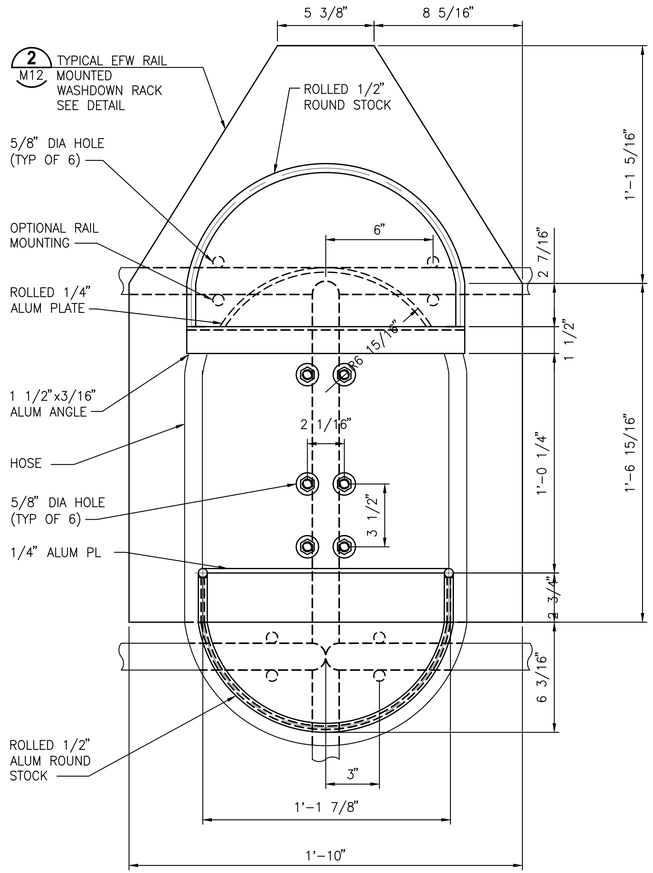

TYPICAL EFW HOSE RACK DETAIL 1

NTS

NOTES:

1. PROVIDE 3 SECTIONS OF 1" x 50'LG, 150# HOSE. OWNER TO DETERMINE FINAL LOCATIONS OF HOSE.
2. ALL YARD HYDRANTS AND RACKS SHALL HAVE A WARNING SIGN STATING "NON-POTABLE WATER – DO NOT DRINK".

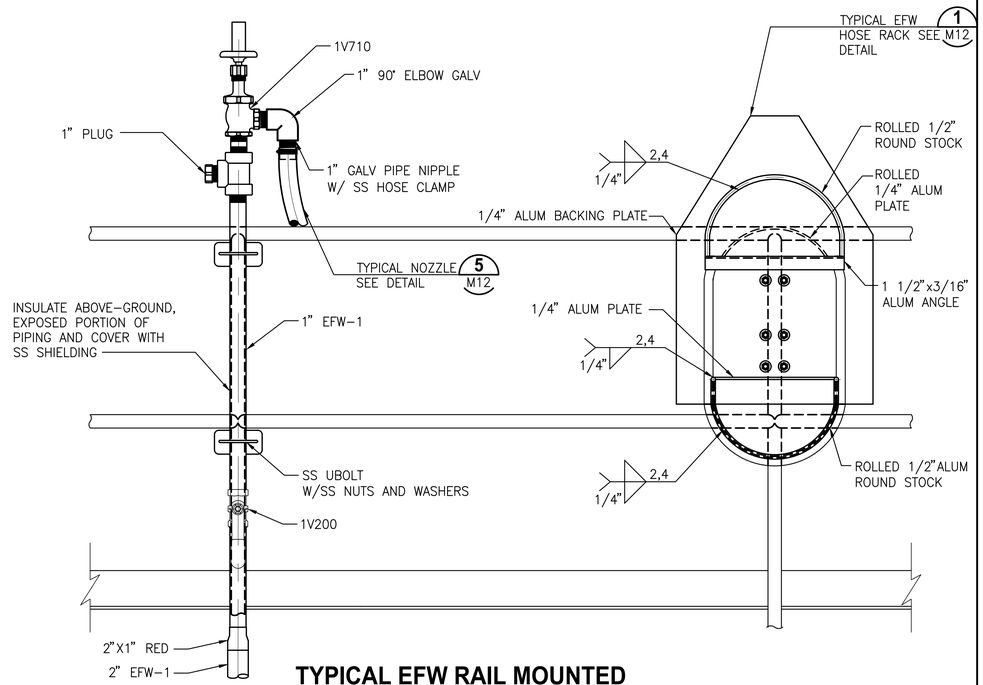

TYPICAL EFW RAIL MOUNTED WASHDOWN RACK DETAIL 2

NTS

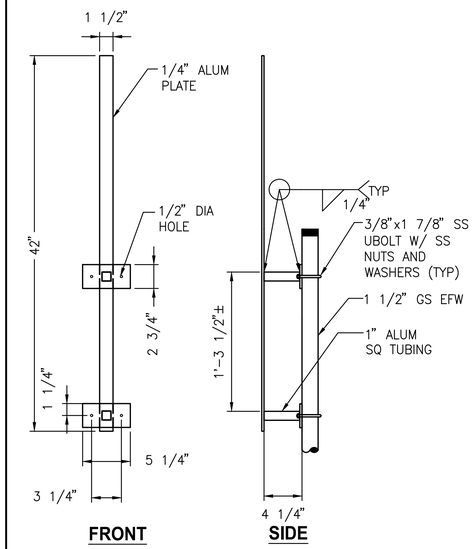

TYPICAL YARD HYDRANT BRACKET MOUNTING DETAIL 3

NTS

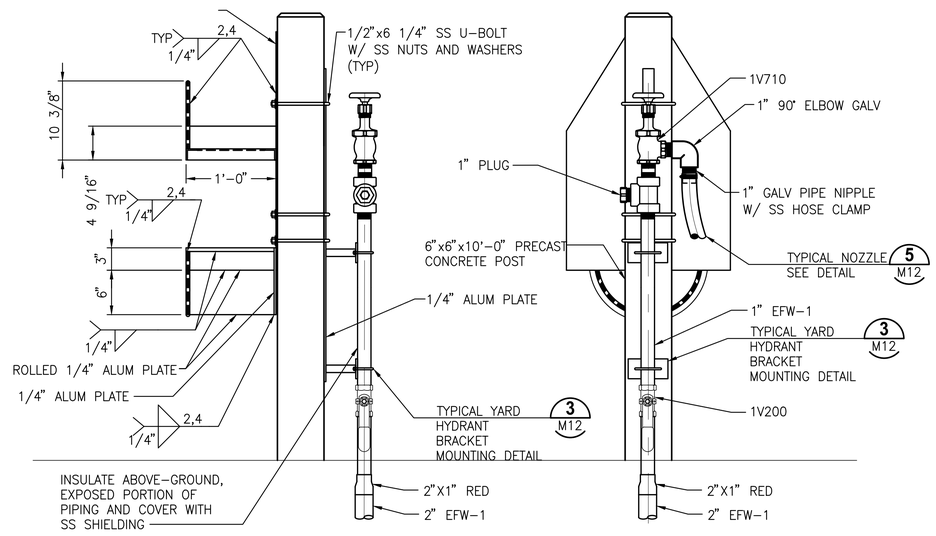

TYPICAL YARD HYDRANT RACK DETAIL 4

NTS

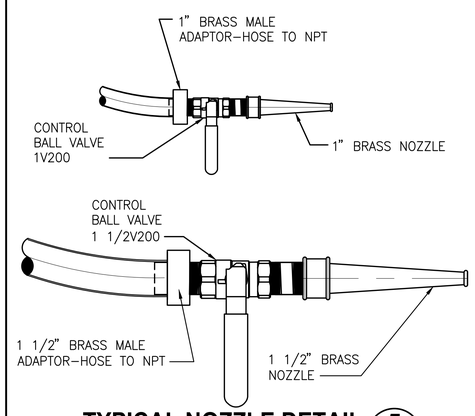

TYPICAL NOZZLE DETAIL 5

NTS

NOTE:

1. PROVIDE 3 – 1" NOZZLES AND VALVES.

BID DOCUMENTS

RECORD DRAWINGS			
SURVEYED BY:	DRAWN BY:		
REVIEWED BY:			
PROJECT ENGINEER		DATE	
APPROVED BY:			
CITY ENGINEERING DIRECTOR TARA KIVETT, P.E. #86611		DATE	
REVISION		BY	DATE

CITY OF CLEARWATER, FLORIDA
ENGINEERING DEPARTMENT
100 S. MYRTLE AVE.
CLEARWATER, FL 33756

INVESTIGATE BEFORE YOU EXCAVATE
CALL 811
SUNSHINE STATE ONE CALL OF FLORIDA
www.sunshine811.com
(800) 432-4770
MIN. 48 HOURS BEFORE YOU EXCAVATE

JonesEdmunds
CERTIFICATE OF AUTHORIZATION #1841
730 NE WALDO ROAD, GAINESVILLE, FLORIDA 32641 / (352) 377-5821
324 S HYDE PARK AVE, SUITE 250, TAMPA, FLORIDA 33606 / (813) 258-0703

NE WRF SLUDGE BLEND TANK IMPROVEMENTS
MECHANICAL DETAILS (3)

DWG NAME: 0372004801-M12.dwg	FIELD BOOK:	SURVEYED BY:	SCALE: VERT.
CONTRACT NO.: 14-0036-UT	DATE DRAWN: AUGUST 2019	DRAWN BY: RWADE	HORIZ. AS NOTED
JOB NO.: 03720-048-01	DESIGNED BY: DYONGE	CHECKED BY: AHOLMES	SHEET NO.: M12
APPROVED FOR CONSTRUCTION			
THOMAS W. FRIEDRICH, P.E. # 61281			DATE

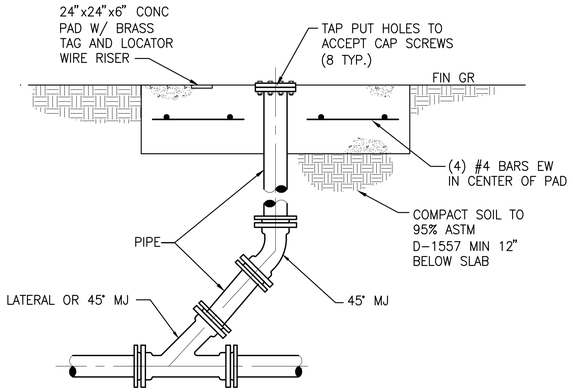

NOTES:
1. PROVIDE PIPE RESTRAINTS AS NEEDED.
2. TOP FLANGE SHALL BE PAINTED YELLOW. ONE STAINLESS STEEL TAG MEASURING 1 1/2"x3" SHALL BE PERMANENTLY ATTACHED AND SHALL BE ENGRAVED WITH THE FOLLOWING STATEMENT: "CAUTION, PRESSURIZED CLEAN OUT", GRANGER NO. 2CEA8 OR EQUAL

PRESSURIZED CLEANOUT DETAIL (1)
NTS

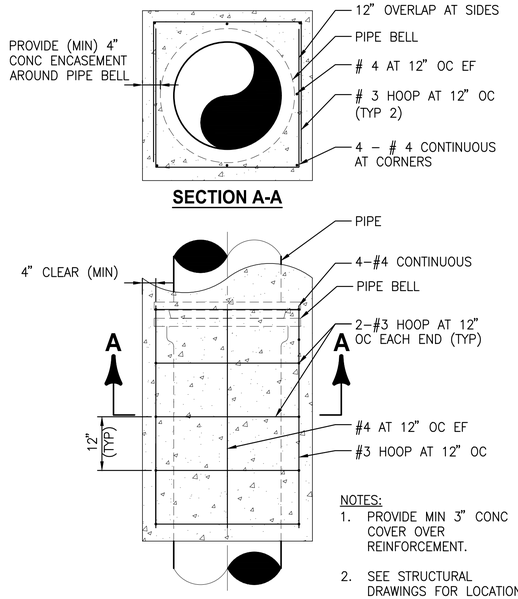

NOTES:
1. PROVIDE MIN 3" CONC COVER OVER REINFORCEMENT.
2. SEE STRUCTURAL DRAWINGS FOR LOCATIONS WHERE PIPE ENCASEMENT IS TIED TO THE SLAB.

TYPICAL CONCRETE ENCASEMENT DETAIL (2)
NTS

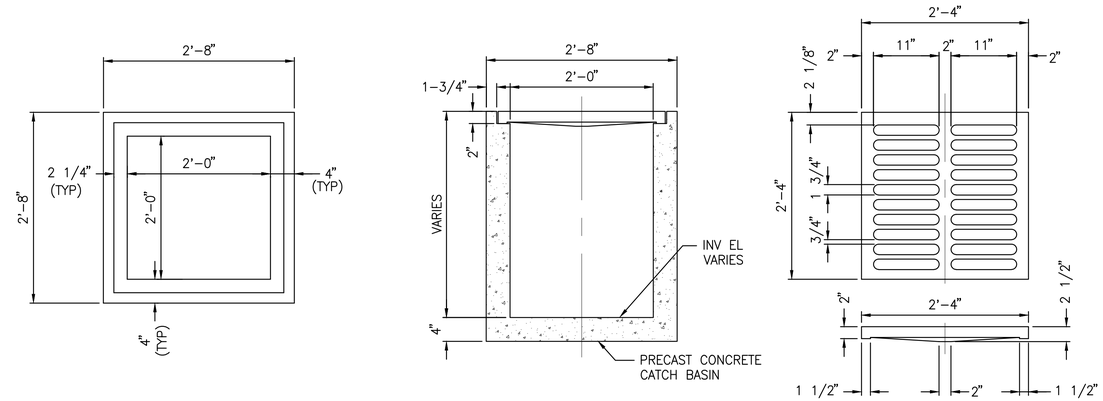

LOADING PAD INLET AND PRECAST CONCRETE CATCH BASIN NOTES:
1. GRATE SHALL BE DESIGNED TO H2O LOADING.
2. GRATE SHALL BE CAST IRON.

LOADING PAD INLET DETAIL (3)
1"=1'-0"

GRAPHIC SCALE
0 0.5 1 2
SCALE IN FEET
1"=1'-0"

GRAPHIC SCALE
0 1 2 4
SCALE IN FEET
1/2"=1'-0"

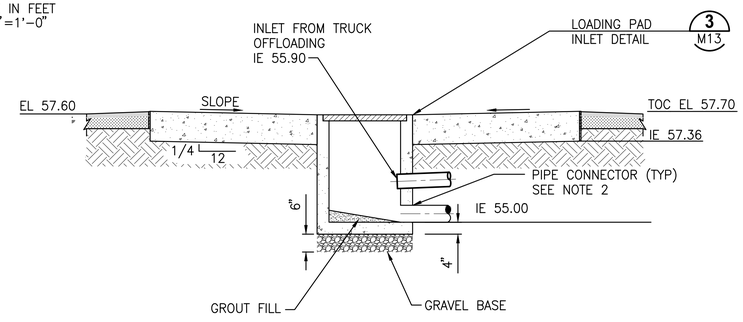

NOTES:
1. PROVIDE EXPANSION JOINT MATERIAL WHERE TRUCK LOADING PAD ADJOINS AN EXISTING/NEW CONCRETE PAD.
2. PIPE CONNECTOR SHALL BE "KOR-N-SEAL I" AS MANUFACTURED BY NPC, INC OR EQUAL.
3. SEE MECHANICAL DRAWINGS FOR DRAIN PIPE SIZES, INVERTS AND ELEVATIONS.

WASHDOWN PAD DETAIL (4)
1/2"=1'-0"

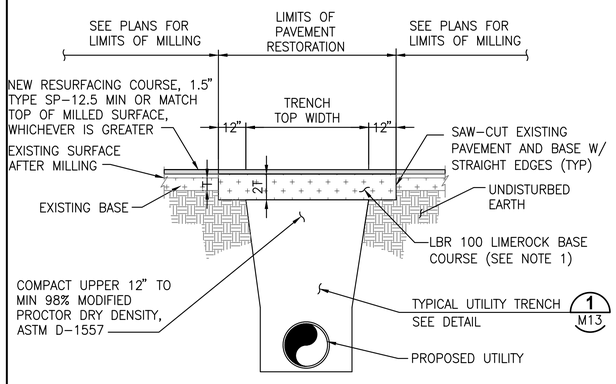

NOTE:
1. NEW LIMEROCK TO BE COMPACTED TO NOT LESS THAN 98% MODIFIED PROCTOR DRY DENSITY, ASTMD-1557.

ASPHALT PAVEMENT REPLACEMENT WITH MILLING AND UTILITY TRENCH DETAIL (5)
NTS

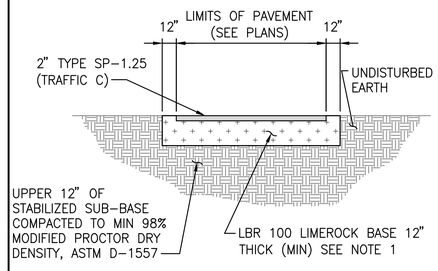

NOTE:
1. NEW LIMEROCK TO BE COMPACTED TO NOT LESS THAN 98% MODIFIED PROCTOR DRY DENSITY, ASTMD-1557.

ASPHALT PAVEMENT DETAIL (6)
NTS

NOTES:
1. SIZE, TYPE, PRESSURE RANGE AND MANUFACTURER PER SPECIFICATIONS DIVISIONS 11 AND DIVISION 15.
2. PRESSURE GAUGES TYPICAL ON SUCTION AND DISCHARGE OF EACH PUMP AND GRINDER.
3. VERIFY SIZE OF LOWER CONNECTION PRIOR TO PURCHASING ANCILLARY PARTS OR DRILLING AND TAPPING.

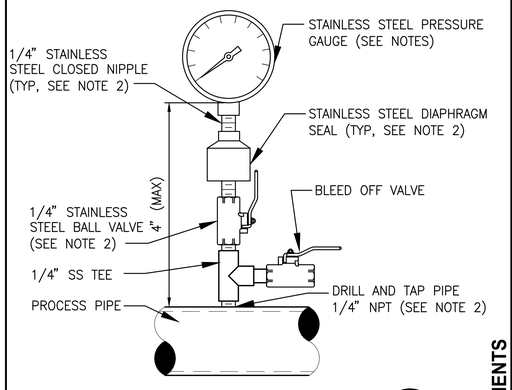

PRESSURE GAUGE DETAIL (7)
NTS

BID DOCUMENTS

LAST SAVED: 6/14/2019 3:13 PM JKRAMER DWG LOCATION:\\TPA-MAIN\DRAFTING\03720 CLEARWATER\048-01 NE BLEND TANK IMPROVEMENTS\CONTRACT DRAWINGS\MECHANICAL\0372004801-M13.DWG

RECORD DRAWINGS
SURVEYED BY: DRAWN BY:
REVIEWED BY: PROJECT ENGINEER DATE
APPROVED BY: CITY ENGINEERING DIRECTOR TARA KIVETT, P.E. #86611 DATE
REVISION BY DATE

CITY OF CLEARWATER, FLORIDA
ENGINEERING DEPARTMENT
100 S. MYRTLE AVE.
CLEARWATER, FL 33756

INVESTIGATE BEFORE YOU EXCAVATE
CALL 811
SUNSHINE STATE ONE CALL OF FLORIDA
www.sunshine811.com
(800) 432-4770
MIN. 48 HOURS BEFORE YOU EXCAVATE

JonesEdmunds
CERTIFICATE OF AUTHORIZATION #1841
730 NE WALDO ROAD, GAINESVILLE, FLORIDA 32641 / (352) 377-5821
324 S HYDE PARK AVE, SUITE 250, TAMPA, FLORIDA 33606 / (813) 258-0703

NE WRF SLUDGE BLEND TANK IMPROVEMENTS
MECHANICAL DETAILS (4)

DWG NAME: 0372004801-M13.dwg	FIELD BOOK:	SURVEYED BY:	SCALE: VERT.
CONTRACT NO.: 14-0036-UT	DATE DRAWN: AUGUST 2019	DRAWN BY: RWADE	HORIZ.
JOB NO.: 03720-048-01	DESIGNED BY: DYONGE	CHECKED BY: AHOLMES	SHEET NO.: M13

APPROVED FOR CONSTRUCTION
THOMAS W. FRIEDRICH, P.E. # 61281 DATE

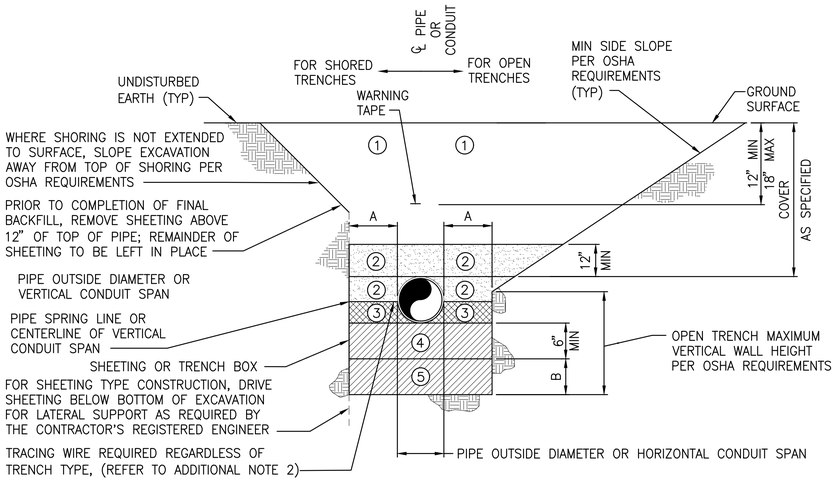

NOMINAL PIPE DIAMETER OR HORIZONTAL CONDUIT SPAN (INCHES)	MINIMUM SIDEWALL CLEARANCE A (INCHES)	ADDITIONAL EXCAVATION DEPTH (1) B (INCHES)
LESS THAN 24	12	12
24 AND GREATER	18	18

(1) REQUIRED WHERE UNSUITABLE MATERIAL IS ENCOUNTERED.

ZONE NO.	ZONE NAME	MATERIAL	COMPACTION
1	FINAL BACKFILL	AS SPECIFIED	AT LEAST 95% MODIFIED PROCTOR MAXIMUM DRY DENSITY ASTM D-1557 (98% WHEN UNDER PAVEMENT)
2	INITIAL BACKFILL		
3	HAUNCHING		
4	BEDDING		
5	FOUNDATION		

TRENCH ZONE NOTES:

1. FINAL BACKFILL SHALL BE INSTALLED IN LIFTS NOT EXCEEDING 6 INCHES, LOOSE MEASUREMENT. REFER TO ADDITIONAL NOTE 3.

2. INITIAL BACKFILL SHALL BE INSTALLED IN LIFTS NOT EXCEEDING 6 INCHES, LOOSE MEASUREMENT. ALL LIFTS SHALL BE COMPACTED BY HAND TAMPING OR AN APPROVED METHOD OF MECHANICAL TAMPING. REFER TO ADDITIONAL NOTE 3.

3. HAUNCHING SHALL BE IN COMPLETELY DEWATERED TRENCHES IN LIFTS NOT EXCEEDING 6 INCHES, LOOSE MEASUREMENT. ALL LIFTS SHALL BE COMPACTED BY HAND TAMPING. HAUNCHING SHALL BE BROUGHT UP EQUALLY ON BOTH SIDES OF THE PIPE.

4. BEDDING SHALL BE INSTALLED IN COMPLETELY DEWATERED TRENCHES IN LIFTS NOT EXCEEDING 6 INCHES, LOOSE MEASUREMENT, AND SHALL BE COMPACTED BY HAND OR MECHANICAL TAMPING. PROPERLY SHAPED BELL HOLES SHALL BE EXCAVATED IN THE BEDDING TO PERMIT ASSEMBLY OF THE PIPE. REFER TO ADDITIONAL NOTE 3.

   NATIVE, UNDISTURBED MATERIAL IN COMPLETELY DEWATERED TRENCHES MEETING THE COMPACTION AND MATERIAL REQUIREMENTS FOR COMPACTED BEDDING MATERIAL NEED NOT BE REPLACED OR REWORKED, EXCEPT FOR SHAPING OF THE BELL HOLES, AND WHERE REFILL IS REQUIRED.

5. FOUNDATION SHALL BE REQUIRED WHERE UNSUITABLE MATERIAL IS ENCOUNTERED. FOUNDATION SHALL BE IN ACCORDANCE WITH THE REQUIREMENTS FOR BEDDING. REFER TO ADDITIONAL NOTE 3.

ADDITIONAL NOTES:

1. FOR TRENCHES IN VEHICULAR TRAFFIC AREAS OR BENEATH SURFACE IMPROVEMENTS (EG, SLABS, ASPHALT, ETC.) SEE CONTRACT SPECIFICATIONS FOR ADDITIONAL COMPACTION REQUIREMENTS. SEE DRAWINGS FOR SURFACE IMPROVEMENT AND /OR RESTORATION DETAILS WHERE APPLICABLE.

2. TRACING WIRE SHALL BE INSTALLED ON THE SIDE OF THE PIPE AND ATTACHED TO THE PIPE EVERY 10' W/ A NYLON WIRE TIE. IF THE WIRE IS DAMAGED OR NEEDS TO BE EXTENDED A 3M WATERPROOF TYPE UF SPLICE SHALL BE INSTALLED TO REPAIR THE WIRE. THE ENDS OF THE TRACING WIRE SHALL BE BROUGHT UP IN EVERY VALVE BOX ON THE LINE AND AT THE HYDRANT VALVES. THERE SHALL BE A MINIMUM COIL OF 3' LEFT UNDER THE VALVE BOX COVER. THE WIRE SHALL BE TESTED TO VERIFY CONDUCTIVITY.

3. ALTERNATIVE LIFT THICKNESSES, NOT EXCEEDING 12 INCHES LOOSE MEASUREMENT, ARE ACCEPTABLE IN TRENCH ZONES 1, 2, 4, AND 5 PROVIDED 1) THE LIFT THICKNESS DOES NOT EXCEED THE MAXIMUM VALUE RECOMMENDED IN WRITING BY THE APPLICABLE PIPE MANUFACTURER AND 2) FIELD TEST RESULTS CONFIRM THAT THE SPECIFIED COMPACTION REQUIREMENTS ARE BEING MET.

TYPICAL UTILITY TRENCH DETAIL 1

NTS

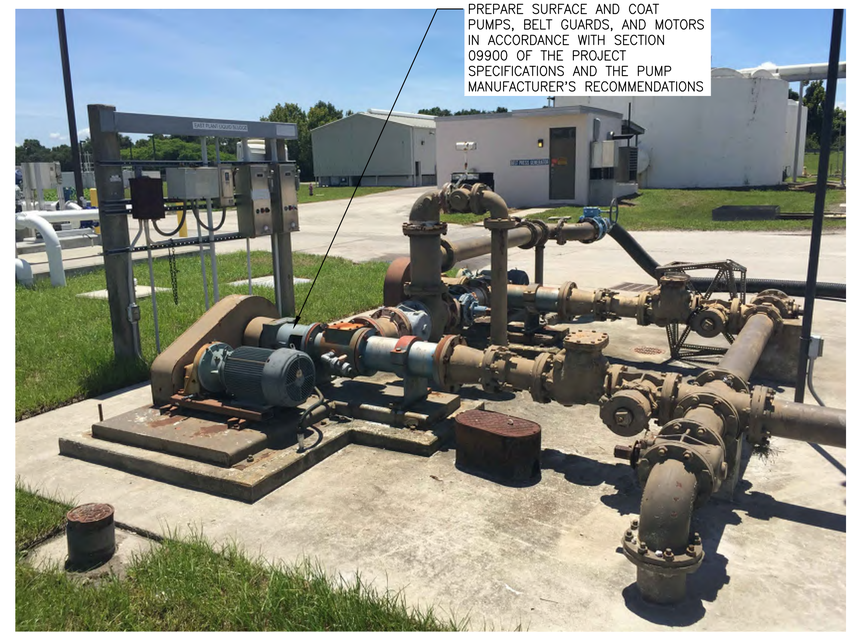

EXISTING NORTHEAST WRF TRUCK OFF-LOADING PUMP STATION DETAIL 2

NTS

BID DOCUMENTS

RECORD DRAWINGS
SURVEYED BY: DRAWN BY:
REVIEWED BY: PROJECT ENGINEER DATE
APPROVED BY: CITY ENGINEERING DIRECTOR TARA KIVETT, P.E. #86611 DATE

REVISION	BY	DATE

CITY OF CLEARWATER, FLORIDA
ENGINEERING DEPARTMENT
100 S. MYRTLE AVE.
CLEARWATER, FL 33756

INVESTIGATE BEFORE YOU EXCAVATE
CALL 811
SUNSHINE STATE ONE CALL OF FLORIDA
www.sunshine811.com
(800) 432-4770
MIN. 48 HOURS BEFORE YOU EXCAVATE

JonesEdmunds
CERTIFICATE OF AUTHORIZATION #1841
730 NE WALDO ROAD, GAINESVILLE, FLORIDA 32641 / (352) 377-5821
324 S HYDE PARK AVE, SUITE 250, TAMPA, FLORIDA 33606 / (813) 258-0703

NE WRF SLUDGE BLEND TANK IMPROVEMENTS
MECHANICAL DETAILS (5)

DWG NAME: 0372004801-M14.dwg	FIELD BOOK:	SURVEYED BY:	SCALE: VERT. HORIZ. AS NOTED
CONTRACT NO.: 14-0036-UT	DATE DRAWN: AUGUST 2019	DRAWN BY: RWADE	
JOB NO.: 03720-048-01	DESIGNED BY: DYONGE	CHECKED BY: AHOLMES	SHEET NO.: M14

APPROVED FOR CONSTRUCTION
THOMAS W. FRIEDRICH, P.E. # 61281 DATE

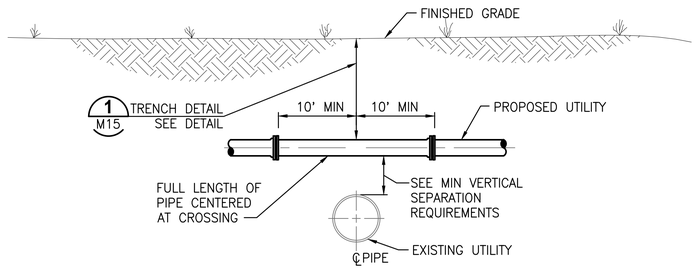

OPTION 1 (SUFFICIENT COVER AND SEPARATION AVAILABLE)

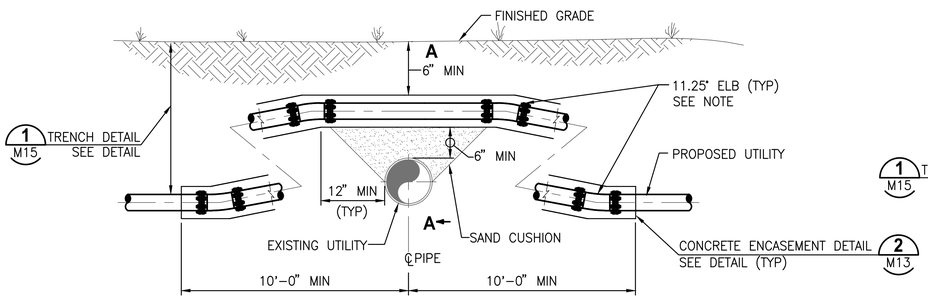

NOTE:
1. IF SUFFICIENT COVER IS NOT AVAILABLE, PROVIDE FITTINGS AS SHOWN.

ALTERNATE OPTION 1 (SUFFICIENT COVER OR SEPARATION NOT AVAILABLE)

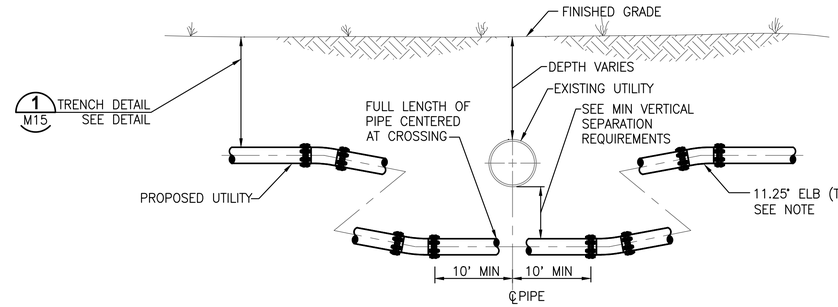

NOTE:
IF ADDITIONAL COVER BEYOND MIN IS REQUIRED TO INSTALL PROPOSED UTILITY BENEATH EXISTING UTILITY, PROVIDE FITTINGS AS SHOWN.

OPTION 2 (SUFFICIENT SEPARATION AVAILABLE)

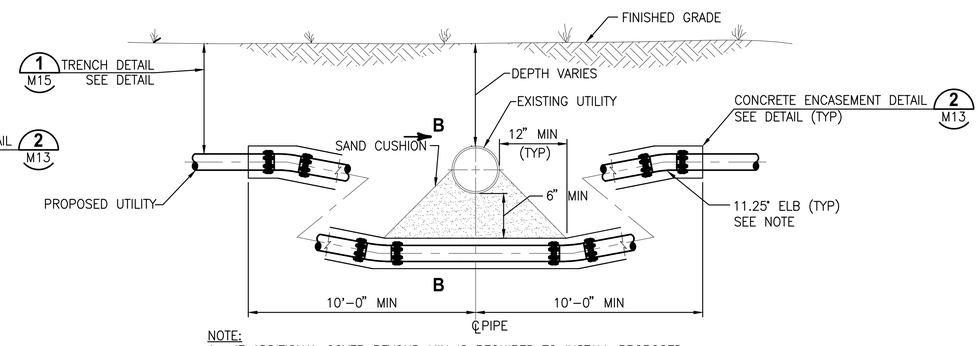

NOTE:
1. IF ADDITIONAL COVER BEYOND MIN IS REQUIRED TO INSTALL PROPOSED UTILITY BENEATH EXISTING UTILITY, PROVIDE FITTINGS AS SHOWN.

ALTERNATE OPTION 2 (SUFFICIENT SEPARATION NOT AVAILABLE)

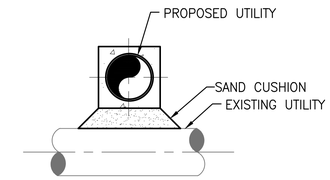

SECTION A-A

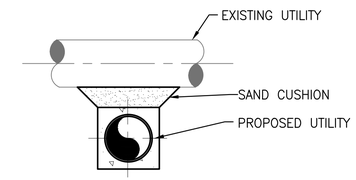

SECTION B-B

PROPOSED UTILITY	EXISTING UTILITY						
	POTABLE WATER	GRAVITY SANITARY SEWER	SEWAGE FORCE MAIN	STORM	RECLAIMED WATER	ELECTRIC TELECOMMUNICATIONS	COMMENTS
POTABLE WATER	1'-0"	1'-6"	1'-6"	1'-0"	1'-6"	1'-0"	SEE NOTE 1
GRAVITY SANITARY SEWER	1'-6"	1'-0"	1'-0"	1'-6"	1'-6"	1'-0"	
SEWAGE FORCE MAIN	1'-6"	1'-0"	1'-0"	1'-6"	1'-6"	1'-0"	SEE NOTE 2
STORM	1'-0"	1'-6"	1'-6"	1'-0"	1'-0"	1'-0"	
RECLAIMED WATER	1'-6"	1'-6"	1'-6"	1'-0"	1'-0"	1'-0"	SEE NOTE 2
ELECTRIC TELECOMMUNICATIONS	1'-0"	1'-0"	1'-0"	1'-0"	1'-0"	1'-0"	

NOTES:
1. ONLY OPTION 1 CONSTRUCTION IS ALLOWED WITHOUT APPROVAL OF ENGINEER.
2. ONLY OPTION 2 CONSTRUCTION IS ALLOWED WITHOUT APPROVAL OF ENGINEER.
3. FITTINGS SHALL NOT BE USED ON GRAVITY SANITARY SEWER. GRAVITY SANITARY SEWER SHALL BE CONSTRUCTED AT A UNIFORM GRADE BETWEEN MANHOLE STRUCTURES

MINIMUM VERTICAL SEPARATION REQUIREMENTS

TYPICAL UTILITY CONFLICT DETAIL 1

NTS

PROPOSED UTILITY	EXISTING UTILITY						
	POTABLE WATER	GRAVITY SANITARY SEWER	SEWAGE FORCE MAIN	STORM	RECLAIMED WATER	ELECTRIC TELECOMMUNICATIONS	TREE
POTABLE WATER	1'-0"	10'-0"	10'-0"	3'-0"	3'-0"	3'-0"	10'-0"
GRAVITY SANITARY SEWER	10'-0"	1'-0"	1'-0"	5'-0"	5'-0"	3'-0"	
SEWAGE FORCE MAIN	10'-0"	1'-0"	1'-0"	3'-0"	3'-0"	3'-0"	
STORM	3'-0"	5'-0"	3'-0"	1'-0"	3'-0"	3'-0"	
RECLAIMED WATER	3'-0"	5'-0"	3'-0"	3'-0"	1'-0"	3'-0"	
ELECTRIC TELECOMMUNICATIONS	3'-0"	3'-0"	3'-0"	3'-0"	3'-0"	2'-0"	

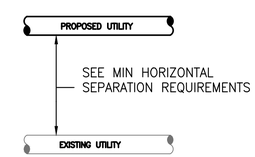

PLAN VIEW

MINIMUM HORIZONTAL SEPARATION REQUIREMENTS

TYPICAL UTILITY HORIZONTAL SEPARATION DETAIL 2

NTS

BID DOCUMENTS

RECORD DRAWINGS
SURVEYED BY: DRAWN BY:
REVIEWED BY: PROJECT ENGINEER DATE
APPROVED BY: CITY ENGINEERING DIRECTOR TARA KIVETT, P.E. #66611 DATE

REVISION	BY	DATE

CITY OF CLEARWATER, FLORIDA
ENGINEERING DEPARTMENT
100 S. MYRTLE AVE.
CLEARWATER, FL 33756

INVESTIGATE BEFORE YOU EXCAVATE
CALL 811
SUNSHINE STATE ONE CALL OF FLORIDA
www.sunshine811.com
(800) 432-4770
MIN. 48 HOURS BEFORE YOU EXCAVATE

JonesEdmunds
CERTIFICATE OF AUTHORIZATION #1841
730 NE WALDO ROAD, GAINESVILLE, FLORIDA 32641 / (352) 377-5821
324 S HYDE PARK AVE, SUITE 250, TAMPA, FLORIDA 33606 / (813) 258-0703

NE WRF SLUDGE BLEND TANK IMPROVEMENTS
MECHANICAL DETAILS (6)

DWG NAME: 0372004801-M15.dwg	FIELD BOOK:	SURVEYED BY:	SCALE: VERT. HORIZ. AS NOTED
CONTRACT NO.: 14-0036-UT	DATE DRAWN: AUGUST 2019	DRAWN BY: RWADE	
JOB NO.: 03720-048-01	DESIGNED BY: DYONGE	CHECKED BY: AHOLMES	SHEET NO.: M15

APPROVED FOR CONSTRUCTION
THOMAS W. FRIEDRICH, P.E. # 61281 DATE

ABBREVIATIONS

A	AMBER, AMPERE, ALARM
AC	ALTERNATING CURRENT
ACB	AIR CIRCUIT CURRENT
ACCU	AIR COOLED CONDENSING UNIT
AF	AMPERE FRAME
AFF	ABOVE FINISHED FLOOR
AFG	ABOVE FINISHED GRADE
AHU	AIR HANDLING UNIT
AIC	AMPS INTERRUPTING CAPACITY
ALUM	ALUMINUM
AM	AMMETER
ANN	ANNUNCIATOR
ANSI	AMERICAN NATIONAL STANDARDS INSTITUTE
AR	ALARM RELAY
ASA	AMERICAN STANDARDS ASSOCIATION
AS	AMMETER SWITCH
AT	AMPERE TRIP
ATS	AUTOMATIC TRANSFER SWITCH
AUX	AUXILIARY
AWG	AMERICAN WIRE GAGE
B	BLUE
BC	BARE COPPER OR BATTERY CHARGER
BIL	BASIC IMPULSE LEVEL
BKR	BREAKER
BLDG	BUILDING
BR	BRAKE
BT	BEARING TEMPERATURE
C	CLOSE, COUNTER, CONTACTOR OR CONDUIT
°C	DEGREES CENTIGRADE
CAB	CABINET
CAP	CAPACITOR
CB	CIRCUIT BREAKER
CB"A"	CIRCUIT BREAKER AUXILIARY CONTACT (OPEN WHEN BREAKER IS OPEN AND CLOSED WHEN BREAKER IS CLOSED OR TRIPPED)
CB"B"	CIRCUIT BREAKER AUXILIARY CONTACT (CLOSED WHEN BREAKER IS OPEN AND OPEN WHEN BREAKER IS CLOSED OR TRIPPED)
CBM	CERTIFIED BALLAST MANUFACTURERS
CI	CELL INTERLOCK
CKT	CIRCUIT
CL2	CHLORINE
CLG	CEILING
CONC	CONCRETE
COND	CONDUCTOR
CONN	CONNECTION
COS	CABLE OPERATED SWITCH
CP	CONTROL PANEL
CPT	CONTROL POWER TRANSFORMER
CR	CURRENT OR CONTROL RELAY
CS	CONTROL STATION
CT	CYCLE TIMER OR CURRENT TRANSFORMER
CTC	CYCLE TIMER CLUTCH
CTM	CYCLE TIMER MOTOR
CU	COPPER
CWP	COLD WATER PIPE
DC	DIRECT CURRENT
DIA	DIAMETER
DI	DOOR INTERLOCK
DM	DAMPER MOTOR OR DEMAND METER
DN	DOWN
DO	DRAW OUT
DPDT	DOUBLE POLE DOUBLE THROW
DPST	DOUBLE POLE SINGLE THROW
DPR	DIFFERENTIAL PRESSURE REGULATOR
DPS	DIFFERENTIAL PRESSURE SWITCH
DS	DISCONNECT SWITCH
DVLS	DISCHARGE VALVE LIMIT SWITCH
EC	EMPTY CONDUIT
EF	EXHAUST FAN
ELEC	ELECTRICAL
EL	ELEVATION
ELR	EMERGENCY LOCKOUT RELAY
EM	EMERGENCY
EMH	ELECTRICAL MANHOLE
EMT	ELECTRICAL METALLIC TUBING
ENCL	ENCLOSURE
EO	ELECTRICALLY OPERATED
EP	EXPLOSION PROOF
ER	ELECTRODE RELAY
ES	END SWITCH
ESB	ENERGY SAVING BALLAST
ETM	ELAPSED TIME METER
EUH	ELECTRIC UNIT HEATER
EVA	ELECTRIC VALVE ACTUATOR
EWC	ELECTRIC WATER COOLER
EWH	ELECTRIC WATER HEATER
EXH	EXHAUST
EXIST	EXISTING
F	FORWARD
°F	DEGREES FAHRENHEIT
FAAP	FIRE ALARM ANNUNCIATION PANEL
FACP	FIRE ALARM CONTROL PANEL
FIT	FLOW INDICATING TRANSMITTER
FLA	FULL LOAD AMPERES
FM	FACTORY MANUAL
FS	FLOW SWITCH
FT	FEET
GALV	GALVANIZED
GB	GENERATOR BREAKER
GD	GROUND DETECTOR
GEN	GENERATOR
GFI	GROUND FAULT INTERRUPTER
GND	GROUND
GFR	GROUND FAULT RELAY
H	HIGH OR HUMIDISTAT
HC	HOT CIRCUIT
HH	HANDHOLE
HMT	HIGH MOTOR TEMPERATURE
HOA	HAND–OFF–AUTO
HOR	HAND–OFF–REMOTE
HP	HORSE POWER
HPS	HIGH PRESSURE SODIUM
HR	HOUR
HWCO	HIGH WATER CUTOFF
HZ	HERTZ (CYCLE)
I/O	INPUT/OUTPUT
IEEE	INSTITUTE OF ELECTRICAL AND ELECTRONIC ENGINEERS
IES	ILLUMINATING ENGINEERING SOCIETY
INST	INSTRUMENTATION
ISO	ISOLATION
J	JUNCTION BOX
K	KEY INTERLOCK
KV	KILOVOLT
KVA	KILOVOLT AMPERE
KVAR	KILOVAR
KW	KILOWATT
KWH	KILOWATT HOUR
L	LOW, LEVEL
LA	LIGHTNING ARRESTED
LC	LIGHTING CONTRACTOR
LOR	LOCAL–OFF–REMOTE
LS	LIMIT OR LEVEL SWITCH
LT	LIGHT
LTG	LIGHTING
LWCO	LOW WATER CUTOFF
M	MAGNETIC MOTOR STARTER
MA	MILLIAMPERE
MAX	MAXIMUM
MCB	MAIN CIRCUIT BREAKER
MCC	MOTOR CONTROL CENTER
MCM	THOUSAND CIRCULAR MIL
MCP	MOTOR CIRCUIT PROTECTOR
MD	MOISTURE DETECTOR
MFM	MAGNETIC FLOW METER
MFR	MANUFACTURER
MH	MANHOLE, MOUNTING HEIGHT OR METAL HALIDE
MIN	MINIMUM
MLO	MAIN LUGS ONLY
MOV	MOTOR OPERATED VALVE
MPR	MOTOR PROTECTION RELAY
MS	MANUAL MOTOR STARTER
MSH	MOTOR SPACE HEATER
MTD	MOUNTED
MTS	MANUAL TRANSFER SWITCH
MV	MILLIVOLT OR MERCURY VAPOR
MVA	MEGA VOLT AMPERE
N	NEUTRAL
NC	NORMALLY CLOSED
NECA	NATIONAL ELECTRICAL CONTRACTORS ASSOCIATION
NEC	NATIONAL ELECTRICAL CODE
NEMA	NATIONAL ELECTRICAL MANUFACTURERS ASSOCIATION
NF	NON–FUSED
NFPA	NATIONAL FIRE PROTECTION ASSOCIATION
NIC	NOT IN CONTRACT
NO	NORMALLY OPEN, NUMBER
NTS	NOT TO SCALE
O	OPEN
OC	ON CENTER
OFCI	OWNER FURNISHED CONTRACTOR INSTALLED
OH	OVERHEAD
OL	OVERLOAD
OLS	OVERLOADS
OSHA	OCCUPATIONAL SAFETY AND HEALTH ACT
P	POLE
PB	PUSH BUTTON OR PULL BOX
PC	PHOTO CONTROL
PLC	PROGRAMMABLE LOGIC CONTROLLER
PF	POWER FACTOR
PH	PHASE, CHEMICAL TERM
PNL	PANEL
PR	PAIR
PRGS	PVC COATED RIGID GALVANIZED STEEL
PRI	PRIMARY
PRS	PROXIMITY SWITCH
PS	PRESSURE SWITCH
PT	POTENTIAL TRANSFORMER, PROGRAM TIMER
PVC	POLYVINYL CHLORIDE
PWR	POWER
R	RED, RAISE, RELAY OR REVERSE
RECP	RECEPTACLE
RES	RESISTOR
RGS	RIGID GALVANIZED STEEL
RMS	ROOT–MEAN–SQUARE
RS	RAPID START
RT	REPEATING TIMER
RTD	RESISTANCE TYPE TEMP DETECTOR
RTU	REMOTE TERMINAL UNIT
SCH	SCHEDULE
SEC	SECONDARY
SH	SPACE HEATER OR SHIELD
SN	SOLID NEUTRAL
SP	SINGLE POLE
SPDT	SINGLE POLE DOUBLE THROW
SPST	SINGLE POLE SINGLE THROW
SS	
ST	STATION TIE BREAKER
SUPV	SUPERVISORY CONTROL
SV	SOLENOID VALVE
SW	SWITCH
SWBD	SWITCHBOARD
SWGR	SWITCHGEAR
T	THERMOSTAT, TIMER, OR TOTALIZER
TACH	TACHOMETER
TB	TERMINAL BLOCK
TC	TIMER CLUTCH OR TIME CLOCK
TD	TIME DELAY RELAY
TEL	TELEPHONE
TEMP	TEMPERATURE
TM	TIMER MOTOR
TQ	TORQUE
TTB	TELEPHONE TERMINAL BOX OR BOARD
TTC	TELEPHONE TERMINAL CABINET
TYP	TYPICAL
UL	UNDERWRITERS LABORATORIES
UG	UNDERGROUND
UON	UNLESS OTHERWISE NOTED
UV	UNDER VOLTAGE
UPS	UNINTERRUPTIBLE POWER SUPPLY
V	VOLTS
VA	VOLT AMPERE
VAR	VARMETER
VFD	VARIABLE FREQUENCY DRIVE
VLS	VALVE LIMIT SWITCH
VM	VOLTMETER
VPI	VALVE POSITION INDICATOR
VS	VOLTMETER SWITCH
VSC	VARIABLE SPEED CONTROLLER
VSD	VARIABLE SPEED DRIVE
W	WHITE, WATTS OR WIRE
WH	WATTHOUR METER
WM	WATT METER
WP	WEATHER PROOF
WT	WATER TIGHT
X	AUXILIARY RELAY
XFMR	TRANSFORMER
XTMR	TRANSFORMER
Y	YELLOW
ZS	POSITION SWITCH
ø	PHASE

GENERAL NOTES

1. ALL ELECTRICAL WORK SHALL COMPLY WITH N.E.C AND LOCAL CODES.
2. DO NOT SCALE THE ELECTRICAL DRAWINGS. REFER TO THE MECHANICAL, STRUCTURAL, CIVIL AND ARCHITECTURAL DWGS AND APPROVED SHOP DRAWINGS FOR THE EXACT LOCATION OF ALL EQUIPMENT.
3. THE CONTRACTOR SHALL VERIFY EXACT LOCATION OF TERMINAL BOXES, PANELBOARDS, CONDUITS, CONTROL PANELS ETC, AGAINST SHOP DRAWINGS BEFORE STUBBING UP CONDUITS.
4. EXPOSED FLEXIBLE CONDUITS SHALL BE 18" MAX.
5. CONTRACTOR SHALL PROVIDE ADDITIONAL PULLBOXES WHERE REQUIRED BY THE NEC AND/OR TO MAKE A WORKABLE INSTALLATION.
6. CONDUIT ENTRY INTO ELECTRICAL EQUIPMENT SHALL BE DIRECTLY BELOW OR ABOVE AND BE LOCATED EQUALLY SPACED FROM EQUIPMENT CENTERLINE
7. ALL ABOVE GRADE CONDUITS SHALL BE RIGID ALUMINUM. ALL CONDUITS BELOW GRADE TO BE PVC–80.
8. ALL WIRES SHALL BE COPPER THWN.

THIS ITEM HAS BEEN DIGITALLY SIGNED AND SEALED BY WILLARD C. HOANSHELT, PE (FL#42593) ON THE DATE INDICATED USING A DIGITAL SIGNATURE.

PRINTED COPIES OF THIS DOCUMENT ARE NOT CONSIDERED SIGNED AND SEALED AND THE SIGNATURE MUST BE VERIFIED ON ANY ELECTRONIC COPIES.

WILLARD C. HOANSHELT LICENSE No. 42593 STATE OF FLORIDA PROFESSIONAL ENGINEER

BID SET

RECORD DRAWINGS
SURVEYED BY: DRAWN BY:
REVIEWED BY: PROJECT ENGINEER DATE
APPROVED BY: CITY ENGINEERING DIRECTOR TARA KIVETT, P.E. #86611 DATE

REVISION	BY	DATE

CITY OF CLEARWATER, FLORIDA
ENGINEERING DEPARTMENT
100 S. MYRTLE AVE.
CLEARWATER, FL 33756

INVESTIGATE BEFORE YOU EXCAVATE
CALL 811
SUNSHINE STATE ONE CALL OF FLORIDA
www.sunshine811.com
(800) 432-4770
MIN. 48 HOURS BEFORE YOU EXCAVATE

JonesEdmunds
CERTIFICATE OF AUTHORIZATION #1841
730 NE WALDO ROAD, GAINESVILLE, FLORIDA 32641 / (352) 377-5821
324 S HYDE PARK AVE, SUITE 250, TAMPA, FLORIDA 33606 / (813) 258-0703

NE WRF SLUDGE BLEND TANK IMPROVEMENTS
ABBREVIATIONS

DWG NAME: E–01 ABBREVIATIONS.dwg	FIELD BOOK:	SURVEYED BY:	SCALE: VERT.
CONTRACT NO.: 14–0036–UT	DATE DRAWN: AUGUST 2019	DRAWN BY: JPH	HORIZ. AS NOTED
JOB NO.: 03720–048–01	DESIGNED BY: WCH	CHECKED BY: WCH	SHEET NO.: E1

APPROVED FOR CONSTRUCTION
WILLARD C HOANSHELT, P.E. # 42593 DATE

ELEMENTARY SYMBOLS

- WIRE INTERSECTION POINT
- EXTERNAL CONNECTION POINT
- NORMALLY OPEN CONTACT
- NORMALLY CLOSED CONTACT
- STARTER, CONTACTOR OR RELAY COIL
- NORMALLY OPEN PUSH BUTTON
- NORMALLY CLOSED PUSH BUTTON
- MAINTAINED PUSH BUTTON
- MOMENTARY MUSHROOM HEAD
- NORMALLY CLOSED GEARED LIMIT SWITCH
- NORMALLY OPEN GEARED LIMIT SWITCH
- INDICATING LIGHT
- FUSE
- POTENTIOMETER
- CAPACITOR
- DIODE
- RES — RESISTOR
- CONTROL POWER TRANSFORMER
- SWITCH
- MS — MANUAL STARTER
- ELECTRODE
- FLOAT SWITCH (CLOSING ON RISING LEVEL)
- FLOAT SWITCH (OPENING ON RISING LEVEL)
- P — PRESSURE SWITCH (CLOSING ON RISING PRESSURE)
- P — PRESSURE SWITCH (OPENING ON RISING PRESSURE)
- V — VACUUM SWITCH (CLOSING ON INCREASING VACUUM)
- V — VACUUM SWITCH (OPENING ON INCREASING VACUUM)
- TEMPERATURE SWITCH (CLOSING ON RISING TEMPERATURE)
- TEMPERATURE SWITCH (OPENING ON RISING TEMPERATURE)
- FLOW ACTUATED SWITCH (CLOSING ON INCREASE IN FLOW)
- FLOW ACTUATED SWITCH (OPENING ON INCREASE IN FLOW)
- ON TIME DELAY SWITCH (NORMALLY OPEN WITH TIME DELAY CLOSING AFTER COIL IS ENERGIZED)
- OFF TIME DELAY SWITCH (NORMALLY OPEN WITH TIME DELAY OPENING AFTER COIL IS DE-ENERGIZED)
- ON TIME DELAY SWITCH (NORMALLY CLOSED WITH TIME DELAY OPENING AFTER COIL IS ENERGIZED)
- OFF TIME DELAY SWITCH (NORMALLY CLOSED WITH TIME DELAY CLOSING AFTER COIL IS DE-ENERGIZED)
- TORQUE SWITCH (NORMALLY OPEN)
- TORQUE SWITCH (NORMALLY CLOSED)
- LIMIT SWITCH (NORMALLY OPEN)
- LIMIT SWITCH (NORMALLY OPEN, HELD CLOSED)

ELEMENTARY SYMBOLS (CON'T)

- LIMIT SWITCH (NORMALLY CLOSED)
- LIMIT SWITCH (NORMALLY CLOSED, HELD OPEN)
- DIFFERENTIAL PRESSURE SWITCH (NORMALLY OPEN, CLOSING ON INCREASING DIFF.)
- DIFFERENTIAL PRESSURE SWITCH (NORMALLY CLOSED, OPENING ON INCREASING DIFF.)

FIRE ALARM SYSTEM

- F — PULL STATION
- F — HORN/LIGHT COMBINATION
- SMOKE DETECTOR
- D — DUCT SMOKE DETECTOR

SINGLE LINE POWER DIAGRAM SYMBOLS

- CIRCUIT BREAKER
- COMBINATION MOTOR STARTER WITH MOTOR CIRCUIT PROTECTOR. FULL VOLTAGE, NON-REVERSING, SINGLE SPEED
- REDUCE VOLTAGE SOLID STATE SINGLE SPEED
- R — FULL VOLTAGE REVERSING SINGLE SPEED
- S F — FULL VOLTAGE, TWO SPEED TWO WINDING
- THERMAL OVERLOADS
- 5 — AC MOTOR, NUMBER INDICATES HORSEPOWER
- 5 — DC MOTOR, NUMBER INDICATES HORSEPOWER
- G — GENERATOR, SIZE AS NOTED
- LOW VOLTAGE CIRCUIT BREAKER DRAW-OUT TYPE
- MEDIUM VOLTAGE CIRCUIT BREAKER DRAW-OUT TYPE
- LIGHTNING ARRESTOR
- SURGE SUPPRESSOR
- SURGE CAPACITOR
- FUSE
- POTENTIAL TRANSFORMER, QUANTITY AS NOTED
- CURRENT TRANSFORMER, QUANTITY AS NOTED
- K — KEY INTERLOCK
- POWER PANEL
- LIGHTING PANEL

SWITCH SYMBOLS

S	SINGLE POLE SWITCH
S_2	DOUBLE POLE SWITCH
S_3	THREE-WAY SWITCH
S_4	FOUR-WAY SWITCH
S_{WP}	WEATHERPROOF SWITCH
S_P	SWITCH WITH PILOT LAMP
S_K	KEY OPERATED SWITCH
S_H	HAZARDOUS AREA SWITCH
D	DIMMER SWITCH
S_L	SWITCH FOR LOW VOLTAGE SWITCHING SYSTEM
S_{LM}	MASTER SWITCH FOR LOW VOLTAGE SWITCHING SYSTEM
S	SWITCH AND SINGLE RECEPTACLE
S	SWITCH AND DOUBLE RECEPTACLE
S_D	DOOR SWITCH
S_T	TIME SWITCH
S_{CB}	CIRCUIT BREAKER SWITCH
S_{MC}	MOMENTARY CONTACT SWITCH OR PUSHBUTTON FOR OTHER THAN SIGNALING SYSTEM
	START/STOP SWITCH
	SPEED CONTROL
	LOCAL CONTROL SWITCH

RECEPTACLE OUTLET SYMBOLS

- SINGLE RECEPTACLE OUTLET
- DUPLEX RECEPTACLE OUTLET
- TRIPLEX RECEPTACLE OUTLET-SPLIT WIRED
- 1 — SINGLE SPECIAL PURPOSE RECEPTACLE OUTLET (SEE NOTE 1)
- 1 — DUPLEX RECEPTACLE SPECIAL PURPOSE OUTLET (SEE NOTE 1)
- 1 — RANGE OUTLET (SEE NOTE 1)
- 1 — SPECIAL PURPOSE CONNECTION OR PROVISION FOR CONNECTION (SEE NOTE 1)
- 1 — MULTIOUTLET ASSEMBLY (SEE NOTE 1)
- 1 — CLOCK HANGER RECEPTACLE (SEE NOTE 1)
- 1 — FAN HANGER RECEPTACLE (SEE NOTE 1)
- FLOOR SINGLE RECEPTACLE OUTLET
- FLOOR DUPLEX RECEPTACLE
- 1 — FLOOR SPECIAL PURPOSE OUTLET (SEE NOTE 1)

NOTE 1: NUMERICAL SUBSCRIPT INDICATES THE SHEET NOTE WHERE THE TYPE OF RECEPTACLE AND USAGE IS NOTED.

SERVICE AND DISTRIBUTION

- 00 — MAGNETIC MOTOR STARTER OR CONTACTOR SIZE AS NOTED
- 5 — MOTOR CONNECTION, AS NOTED
- 5 — MOTOR CONNECTION, FUTURE OR EXISTING AS NOTED
- DISCONNECT SWITCH, SIZE AS NOTED
- COMBINATION MAGNETIC MOTOR STARTER, SIZE AS NOTED
- BRANCH CIRCUIT PANELBOARD, UNDER 250 VOLTS, SURFACE MOUNTED
- BRANCH CIRCUIT PANEL BOARD, UNDER 250 VOLTS, FLUSH MOUNTED
- BRANCH CIRCUIT PANELBOARD, OVER 250 VOLTS, SURFACE MOUNTED
- 15 — TRANSFORMER, SIZE AS NOTED
- SYSTEMS CABINET
- TELEPHONE TERMINAL BOARD

RACEWAY SYSTEM

- J — JUNCTION BOX
- HOME RUN TO PANELBOARD. NO. OF ARROWS INDICATE NO. OF CIRCUITS, HASH MARKS INDICATE NO. OF #12 AWG. CONDUCTORS. NO HASH MARKS INDICATE 2#12 CONDUCTORS.
- CONDUIT CONCEALED IN WALL OR ABOVE CEILING
- CONDUIT CONCEALED IN OR BELOW FLOOR OR UNDERGROUND
- CONDUIT RUN EXPOSED. RUN PARALLEL OR PERPENDICULAR TO STRUCTURE OR WALL

COMMUNICATIONS/VIDEO

- S — INTERIOR CEILING SPEAKER
- S — EXTERIOR HORN SPEAKER
- S — WALL MOUNTED SPEAKER
- WP — EXTERIOR HANDSET
- DESKTOP HANDSET
- FLOOR TELEPHONE OUTLET-PUBLIC
- FLOOR TELEPHONE OUTLET-PRIVATE
- FLUSH OUTLET BOX AND COVER PLATE
- FLUSH FLOOR MOUNTED OUTLET BOX
- C — CAMERA

LIGHTING OUTLETS

CEILING	WALL	
1	1	SURFACE OR PENDANT MOUNTED
1	1	RECESSED FIXTURE
1	1	SURFACE OR PENDANT MOUNTED FLUORESCENT FIXTURE
R 1	R 1	RECESSED FLUORESCENT FIXTURE
1 R		TANDEM FLUORESCENT FIXTURE
1		RECESSED TANDEM FLUORESCENT FIXTURE
1		BARE LAMP FLUORESCENT STRIP WITH GUARD
1		FLUORESCENT TROFFER
		SURFACE OR PENDANT MOUNTED EXIT LIGHT
R	R	RECESSED EXIT LIGHT
B	B	BLANKED OUTLET
J	J	JUNCTION BOX
1	1	POLE MOUNTED FIXTURE
		EMERGENCY LIGHT FIXTURE

NOTE 1:

LETTER SUBSCRIPT INDICATES FIXTURE TYPE AS DESCRIBED IN THE LIGHTING FIXTURE SCHEDULE.

PLAN SYMBOLS

- TT — TEMPERATURE TRANSMITTER
- PT — PRESSURE TRANSMITTER
- FIT — FLOW INDICATING TRANSMITTER
- FE — FLOW ELEMENT
- DIT — DENSITY INDICATING TRANSMITTER
- LIT — LEVEL INDICATING TRANSMITTER
- LE — LEVEL ELEMENT
- VM — VOLT METER
- VS — VOLT SWITCH
- AM — AMPMETER
- AS — AMP SWITCH
- MS — MOTION SWITCH
- FT — FLOAT SWITCH
- FS — FLOW SWITCH
- LS — LIMIT SWITCH
- TS — TORQUE SWITCH
- PS — PRESSURE SWITCH
- T — THERMOSTAT
- VS — VIBRATION SWITCH
- SV — SOLENOID VALVE
- ZS — LIMIT SWITCH

BID SET

RECORD DRAWINGS

SURVEYED BY: | DRAWN BY:
REVIEWED BY: PROJECT ENGINEER | DATE
APPROVED BY: CITY ENGINEERING DIRECTOR TARA KIVETT, P.E. #66611 | DATE

REVISION	BY	DATE

CITY OF CLEARWATER, FLORIDA
ENGINEERING DEPARTMENT
100 S. MYRTLE AVE.
CLEARWATER, FL 33756

INVESTIGATE BEFORE YOU EXCAVATE
CALL 811
SUNSHINE STATE ONE CALL OF FLORIDA
www.sunshine811.com
(800) 432-4770
MIN. 48 HOURS BEFORE YOU EXCAVATE

JonesEdmunds
CERTIFICATE OF AUTHORIZATION #1841
730 NE WALDO ROAD, GAINESVILLE, FLORIDA 32641 / (352) 377-5821
324 S HYDE PARK AVE, SUITE 250, TAMPA, FLORIDA 33606 / (813) 258-0703

NE WRF SLUDGE BLEND TANK IMPROVEMENTS
SYMBOLS

DWG NAME: E-02 SYMBOLS.dwg	FIELD BOOK:	SURVEYED BY:	SCALE: VERT. / HORIZ. AS NOTED
CONTRACT NO.: 14-0036-UT	DATE DRAWN: AUGUST 2019	DRAWN BY: JPH	
JOB NO.: 03720-048-01	DESIGNED BY: WCH	CHECKED BY: WCH	SHEET NO.: E2

APPROVED FOR CONSTRUCTION
WILLARD C HOANSHELT, P.E. # 42593 | DATE

GRAPHIC SCALE
0 10 20 40
SCALE IN FEET

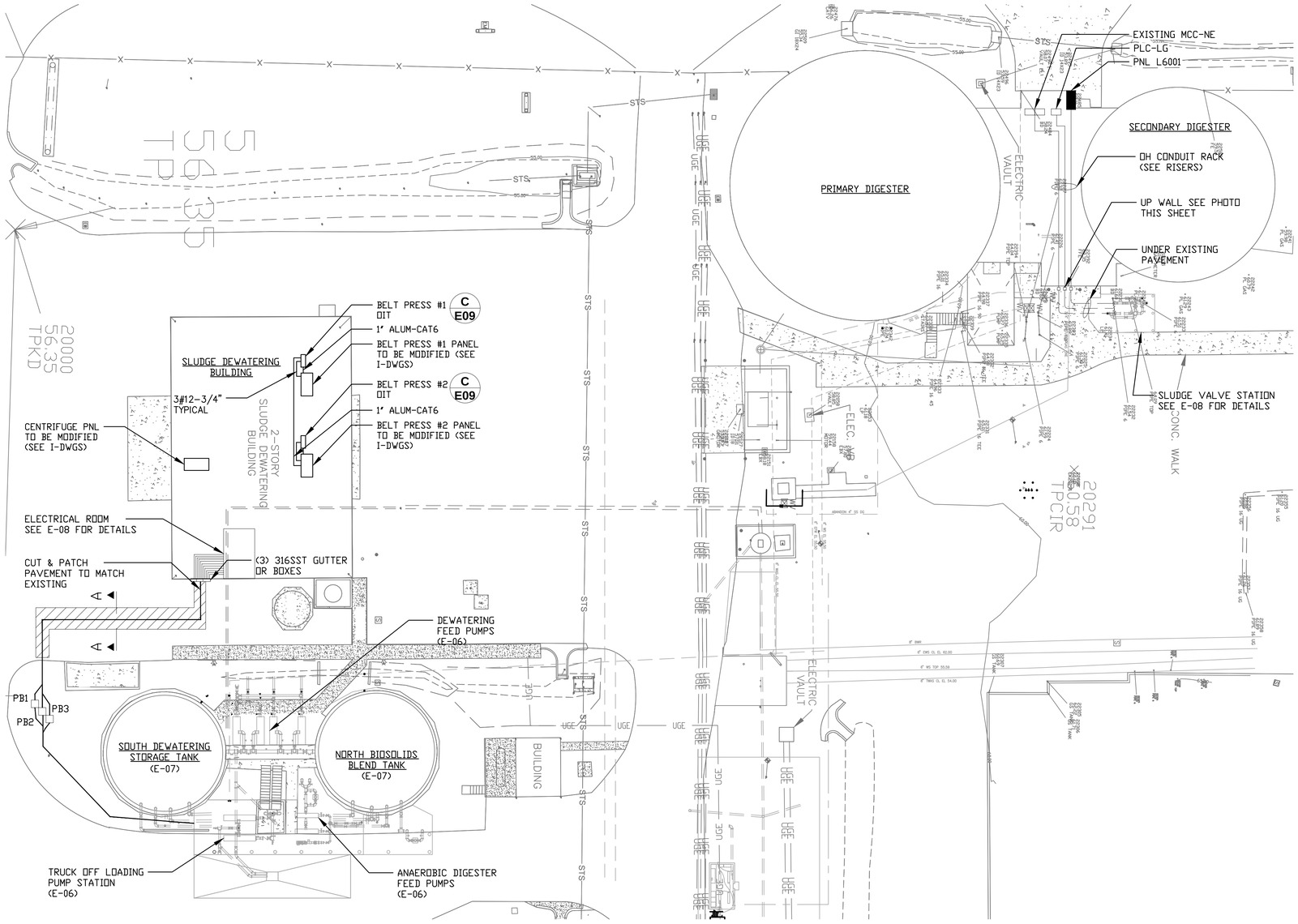

PHOTO: EXISTING CONDUIT RACK

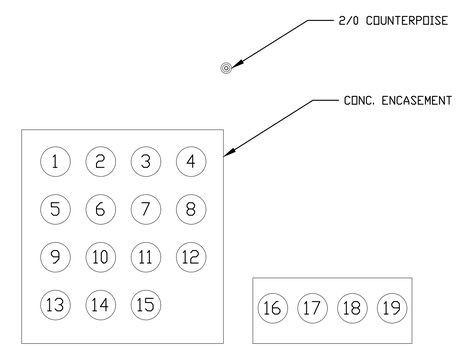

DUCTBANK A-A

1. 101-P-1
2. 101-P-2
3. 102-P-1
4. 102-P-2
5. 103-P-1
6. 103-P-2
7. 103-P-3
8. 103-P-4
9. 101-G-1
10. 110-G-1
11. PNL LBT
12. 110-M-1
13. 110-M-2
14. IP CAMERA
15. SPARE-2"
16. SPARE-2"
17. CONTROL-3"
18. INSTRUMENTATION-2"
19. CONTROL-3"

BID SET

RECORD DRAWINGS
SURVEYED BY: DRAWN BY:
REVIEWED BY: PROJECT ENGINEER DATE
APPROVED BY: CITY ENGINEERING DIRECTOR TARA KIVETT, P.E. #66611 DATE

REVISION	BY	DATE

CITY OF CLEARWATER, FLORIDA
ENGINEERING DEPARTMENT
100 S. MYRTLE AVE.
CLEARWATER, FL 33756

INVESTIGATE BEFORE YOU EXCAVATE
CALL 811
SUNSHINE STATE ONE CALL OF FLORIDA
www.sunshine811.com
(800) 432-4770
MIN. 48 HOURS BEFORE YOU EXCAVATE

JonesEdmunds
CERTIFICATE OF AUTHORIZATION #1841
730 NE WALDO ROAD, GAINESVILLE, FLORIDA 32641 / (352) 377-5821
324 S HYDE PARK AVE, SUITE 250, TAMPA, FLORIDA 33606 / (813) 258-0703

NE WRF SLUDGE BLEND TANK IMPROVEMENTS
SITE PLAN

DWG NAME: E-03 SITE PLAN.dwg	FIELD BOOK:	SURVEYED BY:	SCALE: VERT. HORIZ. AS NOTED
CONTRACT NO.: 14-0036-UT	DATE DRAWN: AUGUST 2019	DRAWN BY: JPH	
JOB NO.: 03720-048-01	DESIGNED BY: WCH	CHECKED BY: WCH	SHEET NO.: E3

APPROVED FOR CONSTRUCTION
WILLARD C HOANSHELT, P.E. # 42593 DATE

LAST SAVED: 8/20/2019 10:49 AM CAUTODESK DWG LOCATION:\\TPA-MAIN\DRAFTING\03720 CLEARWATER\048-01 NE BLEND TANK IMPROVEMENTS\CONTRACT DRAWINGS\ELEC-INSTRUM\E-03 SITE PLAN.DWG

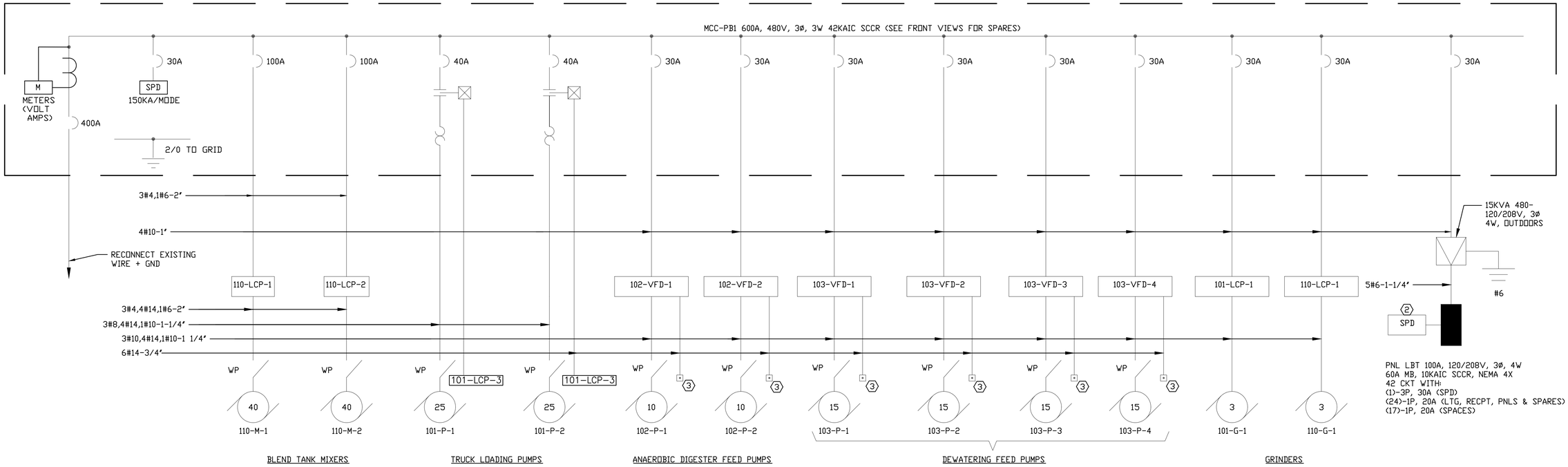

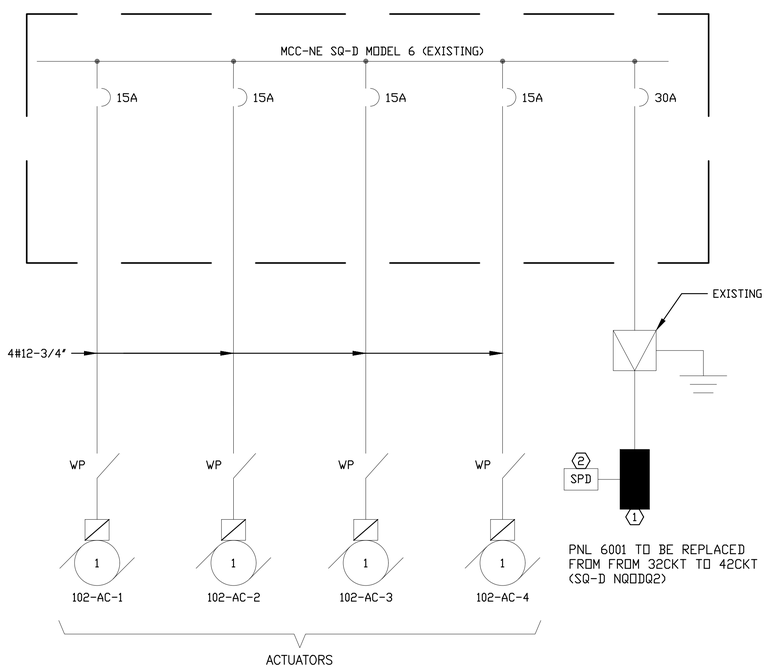

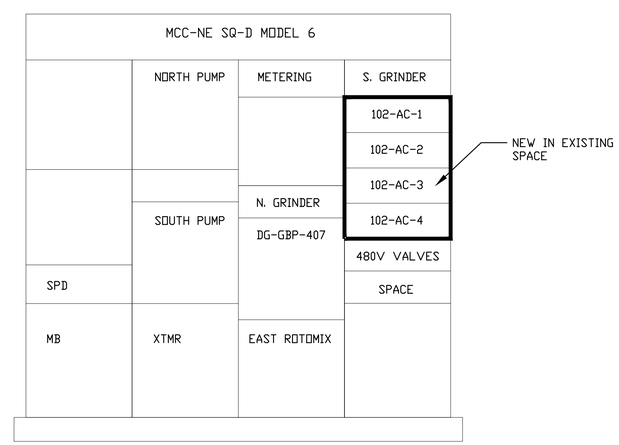

MCC-NE FRONT VIEW

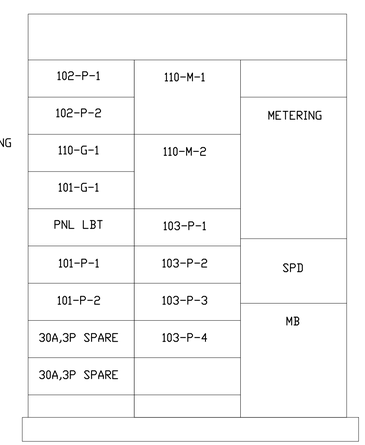

MCC-PB1 FRONT VIEW

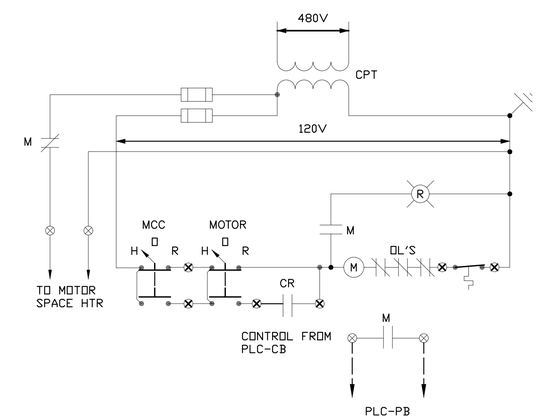

PUMP 101-P-1&2

SHEET NOTES

1. EXISTING LOAD CENTER W/ 100A MB 3P, W/
   (30)-1P, 20A
   (1)-2P, 30A
   ADD:
   (1)-1P, 20A (FLOW METER)
   (1)-3P, 30A (SPD)
   (5)-1P, 20A (SPARES)
2. SURGE PROTECTION 50KA/MODE, NEMA 4X
3. LOCAL HOA & EM. STOP PB.

BID SET

RECORD DRAWINGS

SURVEYED BY: DRAWN BY:

REVIEWED BY: PROJECT ENGINEER DATE

APPROVED BY: CITY ENGINEERING DIRECTOR TARA KIVETT, P.E. #66611 DATE

REVISION	BY	DATE

CITY OF CLEARWATER, FLORIDA
ENGINEERING DEPARTMENT
100 S. MYRTLE AVE.
CLEARWATER, FL 33756

INVESTIGATE BEFORE YOU EXCAVATE
CALL 811
SUNSHINE STATE ONE CALL OF FLORIDA
www.sunshine811.com
(800) 432-4770
MIN. 48 HOURS BEFORE YOU EXCAVATE

JonesEdmunds
CERTIFICATE OF AUTHORIZATION #1841
730 NE WALDO ROAD, GAINESVILLE, FLORIDA 32641 / (352) 377-5821
324 S HYDE PARK AVE, SUITE 250, TAMPA, FLORIDA 33606 / (813) 258-0703

NE WRF SLUDGE BLEND TANK IMPROVEMENTS
POWER RISER

DWG NAME: E-04 POWER RISER.dwg	FIELD BOOK:	SURVEYED BY:	SCALE: VERT. HORIZ. AS NOTED
CONTRACT NO.: 14-0036-UT	DATE DRAWN: AUGUST 2019	DRAWN BY: JPH	
JOB NO.: 03720-048-01	DESIGNED BY: WCH	CHECKED BY: WCH	SHEET NO.: E4

APPROVED FOR CONSTRUCTION

WILLARD C HOANSHELT, P.E. # 42593 DATE

LAST SAVED: 8/20/2019 10:48 AM CAUTODESK DWG LOCATION:\\TPA-MAIN\DRAFTING\03720 CLEARWATER\048-01 NE BLEND TANK IMPROVEMENTS\CONTRACT DRAWINGS\ELEC-INSTRUM\E-04 POWER RISER.DWG

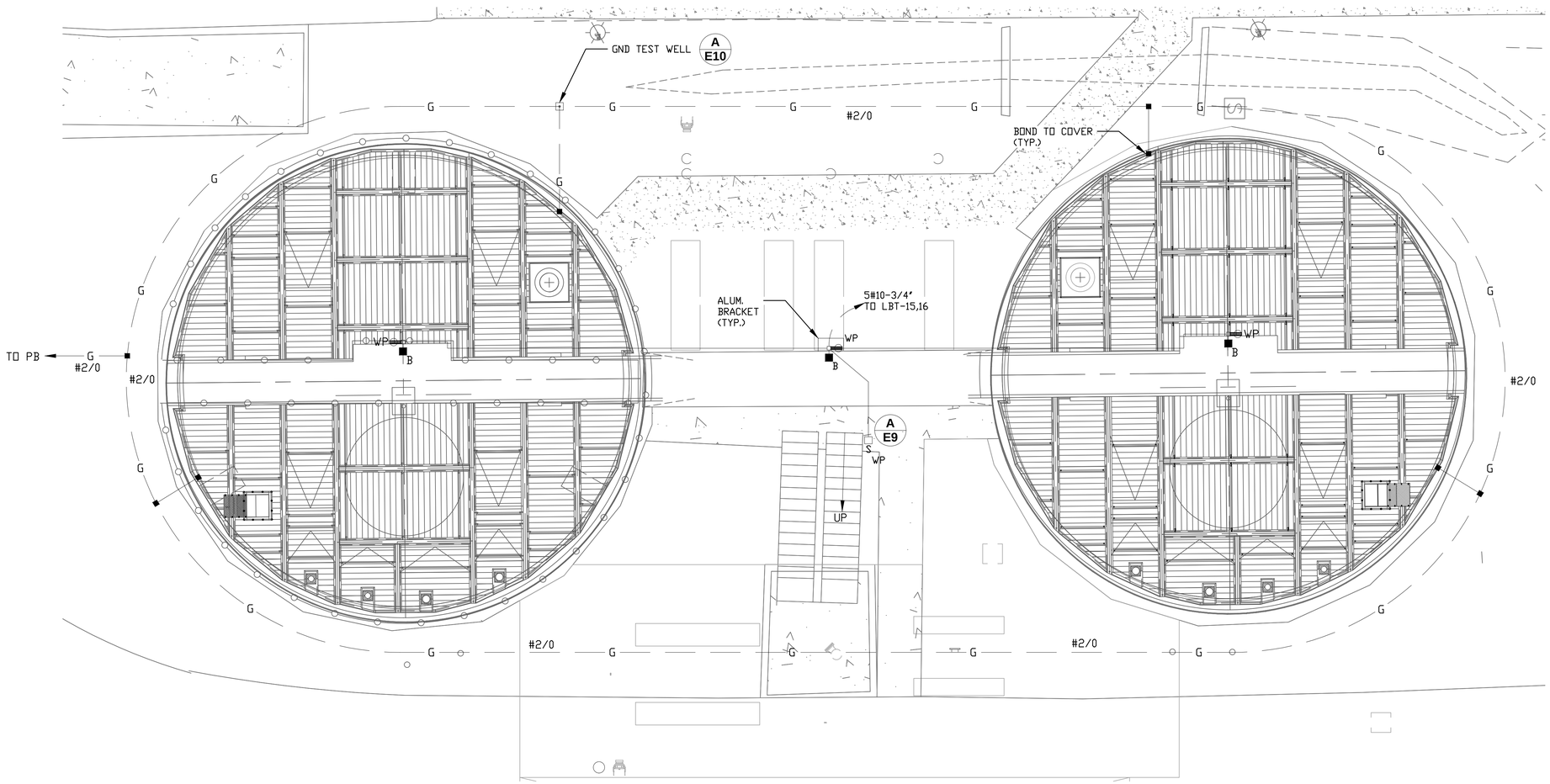

BID SET

RECORD DRAWINGS			
SURVEYED BY:	DRAWN BY:		
REVIEWED BY:			
PROJECT ENGINEER		DATE	
APPROVED BY:			
CITY ENGINEERING DIRECTOR TARA KIVETT, P.E. #66611		DATE	

REVISION	BY	DATE

CITY OF CLEARWATER, FLORIDA
ENGINEERING DEPARTMENT
100 S. MYRTLE AVE.
CLEARWATER, FL 33756

INVESTIGATE BEFORE YOU EXCAVATE
CALL 811
SUNSHINE STATE ONE CALL OF FLORIDA
www.sunshine811.com
(800) 432-4770
MIN. 48 HOURS BEFORE YOU EXCAVATE

JonesEdmunds
CERTIFICATE OF AUTHORIZATION #1841
730 NE WALDO ROAD, GAINESVILLE, FLORIDA 32641 / (352) 377-5821
324 S HYDE PARK AVE, SUITE 250, TAMPA, FLORIDA 33606 / (813) 258-0703

NE WRF SLUDGE BLEND
TANK IMPROVEMENTS
GROUNDING PLAN

DWG NAME: E-05 GROUNDING PLAN.dwg	FIELD BOOK:	SURVEYED BY:	SCALE: VERT. ____
CONTRACT NO.: 14-0036-UT	DATE DRAWN: AUGUST 2019	DRAWN BY: JPH	HORIZ. AS NOTED
JOB NO.: 03720-048-01	DESIGNED BY: WCH	CHECKED BY: WCH	SHEET NO.: E5
APPROVED FOR CONSTRUCTION			
	WILLARD C HOANSHELT, P.E. # 42593		DATE

PLOT DATE: 8/20/2019 11:10 AM CAD AUTODESK

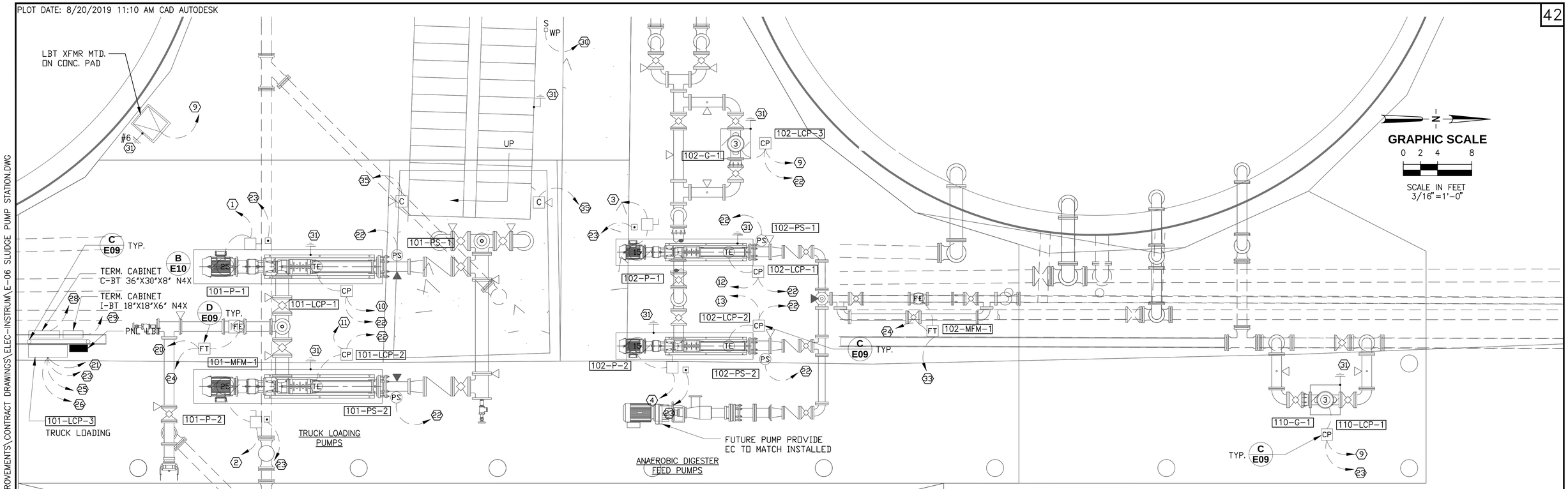

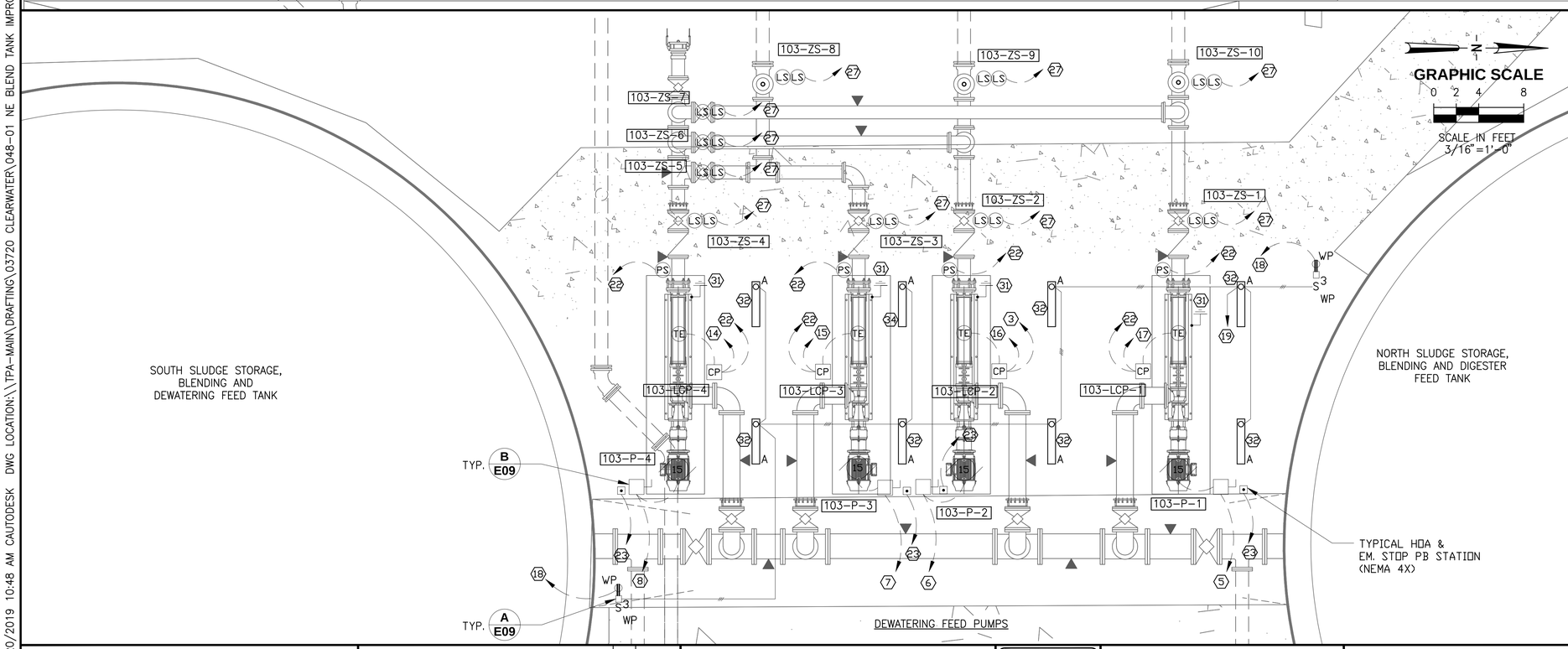

SHEET NOTES

1. TO MCC
2. TO MCC
3. TO 102-VFD-1
4. TO 102-VFD-2
5. TO 103-VFD-1
6. TO 103-VFD-2
7. TO 103-VFD-3
8. TO 103-VFD-4
9. TO MCC-PB1
10. TO LBT- 2
11. TO LBT- 4
12. TO LBT- 6
13. TO LBT- 7
14. TO LBT- 8
15. TO LBT- 9
16. TO LBT- 10
17. TO LBT- 11
18. TO LBT- 12
19. TO LBT- 13
20. TO LBT- 14
21. TO LBT- 15
22. 2#14-3/4" TO C-BT
23. 6#14-3/4" TO C-BT
24. 1-2/C#16SH-3/4" TO I-BT
25. 1-2/C#16SH-3/4" TO LIT-201
26. 1-2/C#16SH-3/4" TO LIT-202
27. 4#14-3/4" TO C-BT

SHEET NOTES

28. (2)-3" W/(2)-37/C#14 TO C-PB
29. 1-12/P#16SH-2" TO PLC-PB
30. TO LTG ON TOP OF TANKS
31. #2/0 TINNED CU TO GRID (SEE E5)
32. TYPE A 4' LINEAR, VAPORTIGHT, LED, 5000LM POLY HOUSING, ACRYLIC LENS NEMA 4X, 120VAC, SURFACE MTD. LITHONIA XVML MVOLT 4000K
33. TO LBT-18
34. SAME AS 32 EXCEPT W/ BATTERY BACKUP
35. 1" ALUM. W/CAT6 SH CABLE TO PLC-PB

BID SET

RECORD DRAWINGS
SURVEYED BY: DRAWN BY:
REVIEWED BY: PROJECT ENGINEER DATE
APPROVED BY: CITY ENGINEERING DIRECTOR TARA KIVETT, P.E. #86611 DATE

REVISION | BY | DATE

CITY OF CLEARWATER, FLORIDA
ENGINEERING DEPARTMENT
100 S. MYRTLE AVE.
CLEARWATER, FL 33756

INVESTIGATE BEFORE YOU EXCAVATE
CALL 811
SUNSHINE STATE ONE CALL OF FLORIDA
www.sunshine811.com
(800) 432-4770
MIN. 48 HOURS BEFORE YOU EXCAVATE

JonesEdmunds
CERTIFICATE OF AUTHORIZATION #1841
730 NE WALDO ROAD, GAINESVILLE, FLORIDA 32641 / (352) 377-5821
324 S HYDE PARK AVE, SUITE 250, TAMPA, FLORIDA 33606 / (813) 258-0703

NE WRF SLUDGE BLEND TANK IMPROVEMENTS
SLUDGE PUMP STATIONS

DWG NAME: E-06 SLUDGE PUMP STATION.dwg	FIELD BOOK:	SURVEYED BY:	SCALE: VERT. ____ HORIZ. AS NOTED
CONTRACT NO.: 14-0036-UT	DATE DRAWN: AUGUST 2019	DRAWN BY: JPH	
JOB NO.: 03720-048-01	DESIGNED BY: WCH	CHECKED BY: WCH	SHEET NO.: E6

APPROVED FOR CONSTRUCTION
WILLARD C HOANSHELT, P.E. # 42593 DATE

LAST SAVED: 8/20/2019 10:48 AM CAUTODESK DWG LOCATION:\\TPA-MAIN\DRAFTING\03720 CLEARWATER\048-01 NE BLEND TANK IMPROVEMENTS\CONTRACT DRAWINGS\ELEC-INSTRUM\E-06 SLUDGE PUMP STATION.DWG

GRAPHIC SCALE

0 1 2 4 8

SCALE IN FEET
1/4"=1'-0"

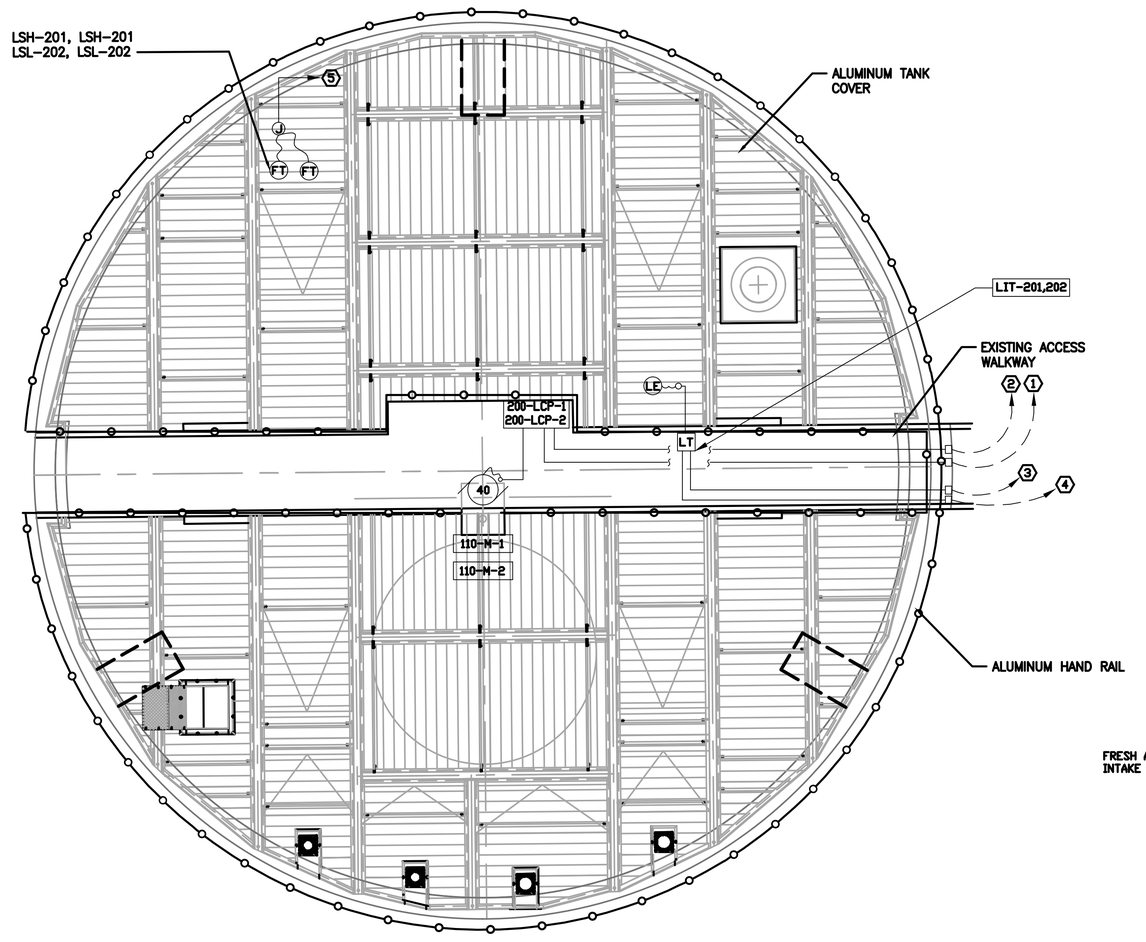

PLAN

SHEET NOTES

1. MCC-PB1
2. 10#14-3/4" TO C-BT
3. 1-2/C#16SH-3/4" TO TRUCK LOAD PNL
4. LBT-19, LBT-20
5. 4#14-3/4 TO C-BT

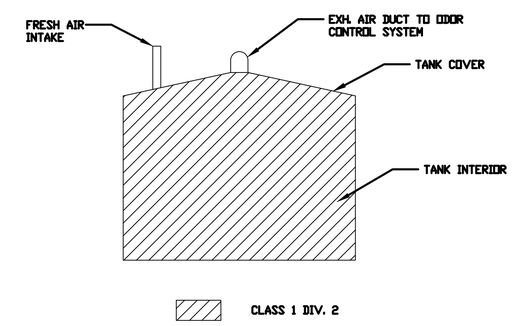

ELECTRICAL CLASSIFICATION

NORTH SLUDGE STORAGE AND BLENDING TANK
(TYPICAL OF SOUTH SLUDGE STORAGE AND BLENDING TANK)

BID SET

RECORD DRAWINGS
SURVEYED BY: DRAWN BY:
REVIEWED BY: PROJECT ENGINEER DATE
APPROVED BY: CITY ENGINEERING DIRECTOR DANA RIVETT, P.E. #56891 DATE

REVISION	BY	DATE

CITY OF CLEARWATER, FLORIDA
ENGINEERING DEPARTMENT
100 S. MYRTLE AVE.
CLEARWATER, FL 33756

CALL 811 SUNSHINE STATE ONE CALL OF FLORIDA www.sunshine811.com (800) 432-4770 MIN. 48 HOURS BEFORE YOU EXCAVATE

JonesEdmunds
CERTIFICATE OF AUTHORIZATION #1841
730 NE WALDO ROAD, GAINESVILLE, FLORIDA 32641 / (352) 377-5821
324 S HYDE PARK AVE, SUITE 250, TAMPA, FLORIDA 33606 / (813) 258-0703

NE WRF SLUDGE BLEND TANK IMPROVEMENTS
SLUDGE STORAGE & BLENDING TANKS

DWG NAME: E07 SLUDGE TANKS.dwg	FIELD BOOK:	SURVEYED BY:	SCALE: VERT. HORIZ. AS NOTED
CONTRACT NO.: 14-0036-UT	DATE DRAWN: JULY 2019	DRAWN BY: RWADE	
JOB NO.: 03720-048-01	DESIGNED BY: DYONGE	CHECKED BY: AHOLMES	SHEET NO.: E7
APPROVED FOR CONSTRUCTION WILLARD C HOANSHELT, P.E. # 48885			DATE

LAST SAVED: 5/4/2020 11:10 AM WHOANSHELT DWG LOCATION:T:\MY CLIENTS DWGS\JONES EDMUNDS\CLEARWATER NE BLEND TANK\USE THESE EMI DWG 3-29-19\E-07 SLUDGE TANKS.DWG

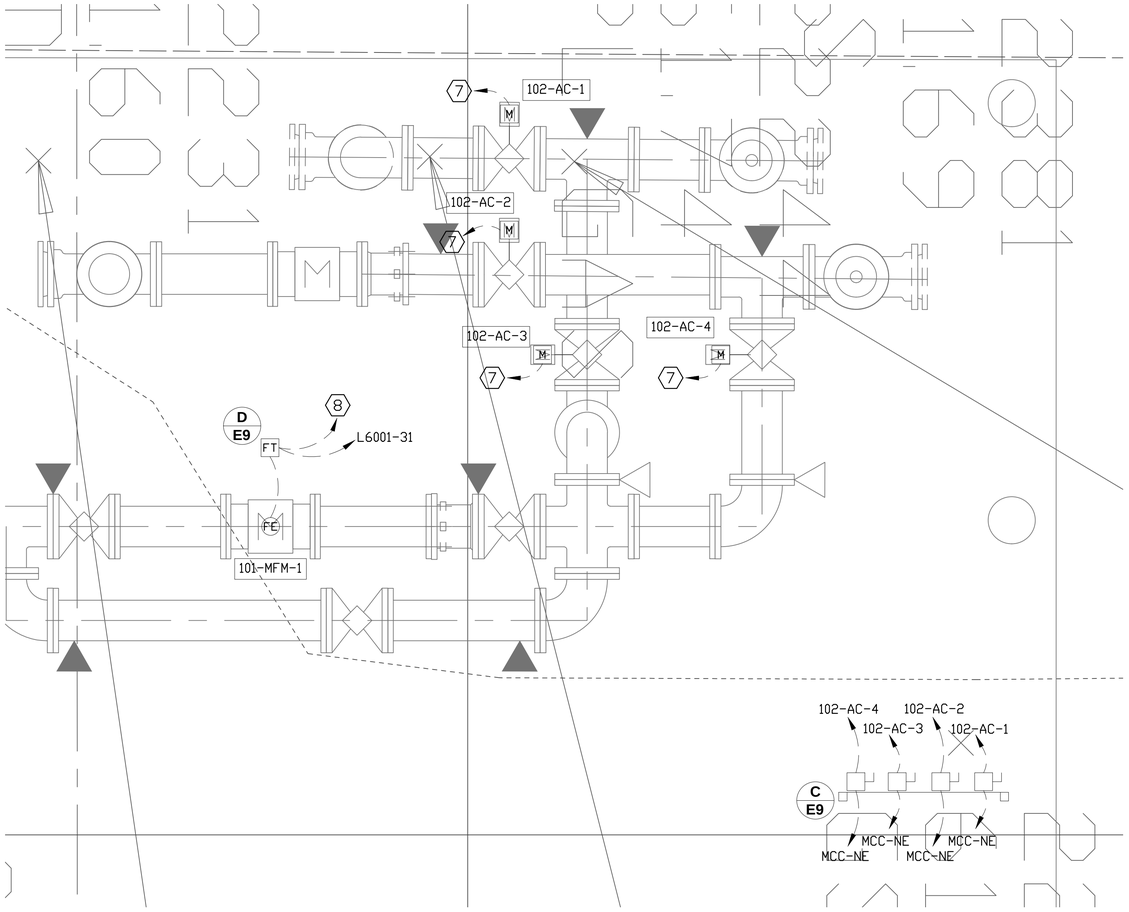

SLUDGE VALVE STATION

NTS

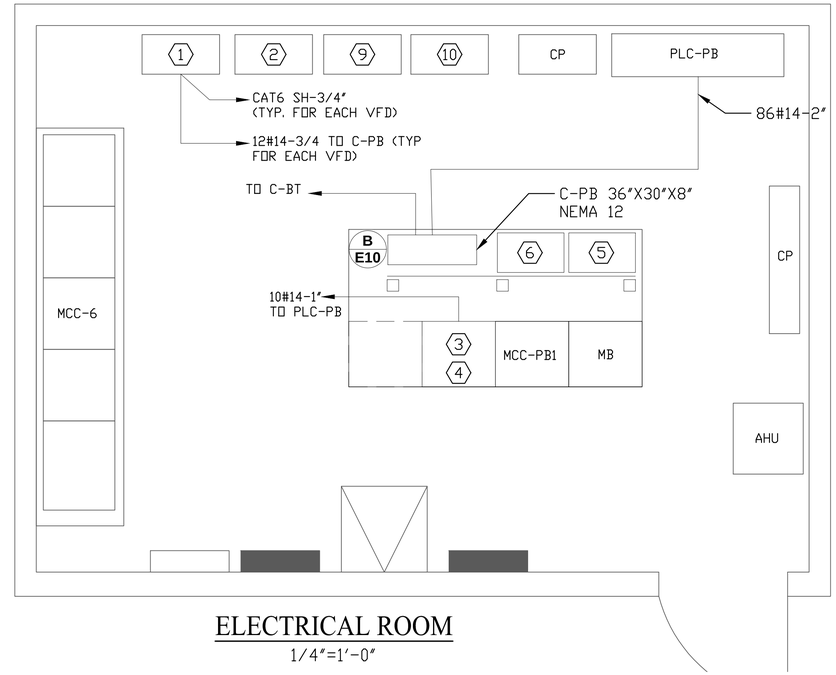

ELECTRICAL ROOM

1/4"=1'-0"

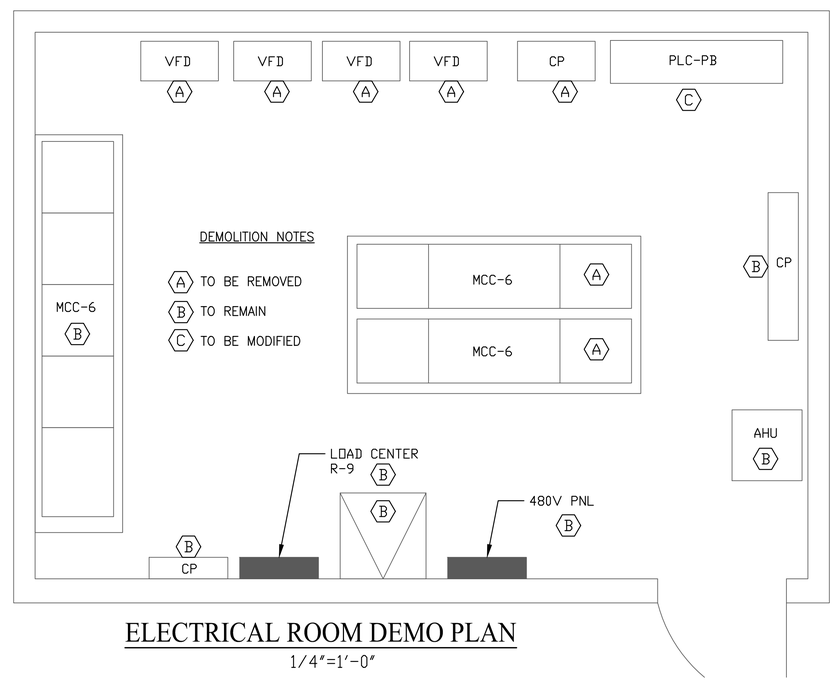

ELECTRICAL ROOM DEMO PLAN

1/4"=1'-0"

SHEET NOTES

1. PUMP 103-P-1 VFD
2. PUMP 103-P-2 VFD
3. PUMP 101-P-1 MCC
4. PUMP 101-P-2 MCC
5. PUMP 102-1 VFD
6. PUMP 102-2 VFD
7. 10#14-1" TO PLC-DG
8. 1-2/C#16SH-3/4" TO PLC-DG
9. PUMP 103-P-3 VFD
10. PUMP 130-P-4 VFD

BID SET

RECORD DRAWINGS			
SURVEYED BY:	DRAWN BY:		
REVIEWED BY:			
PROJECT ENGINEER	DATE		
APPROVED BY:			
CITY ENGINEERING DIRECTOR TARA KIVETT, P.E. #86611	DATE	REVISION	BY / DATE

CITY OF CLEARWATER, FLORIDA
ENGINEERING DEPARTMENT
100 S. MYRTLE AVE.
CLEARWATER, FL 33756

INVESTIGATE BEFORE YOU EXCAVATE
CALL 811
SUNSHINE STATE ONE CALL OF FLORIDA
www.sunshine811.com
(800) 432-4770
MIN. 48 HOURS BEFORE YOU EXCAVATE

JonesEdmunds
CERTIFICATE OF AUTHORIZATION #1841
730 NE WALDO ROAD, GAINESVILLE, FLORIDA 32641 / (352) 377-5821
324 S HYDE PARK AVE, SUITE 250, TAMPA, FLORIDA 33606 / (813) 258-0703

NE WRF SLUDGE BLEND TANK IMPROVEMENTS
SLUDGE VALVE STATION & ELECTRICAL ROOM

DWG NAME: E-08 SLUDGE VALVE STATION & ELECTRICAL ROOM.dwg	FIELD BOOK:	SURVEYED BY:	SCALE: VERT. ___ HORIZ. AS NOTED
CONTRACT NO.: 14-0036-UT	DATE DRAWN: AUGUST 2019	DRAWN BY: JPH	
JOB NO.: 03720-048-01	DESIGNED BY: WCH	CHECKED BY: WCH	SHEET NO.: E8
APPROVED FOR CONSTRUCTION	WILLARD C HOANSHELT, P.E. # 42593	DATE	

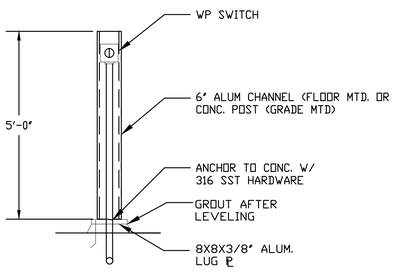

A SWITCH MOUNTED DETAIL

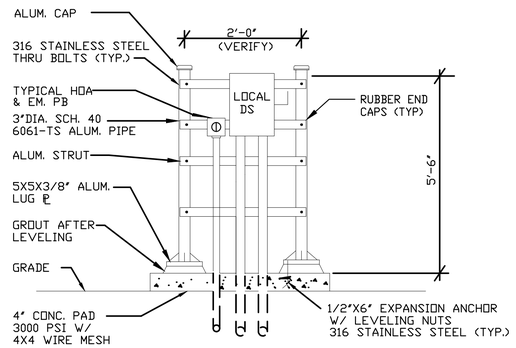

B SURFACE MOUNTING DETAIL

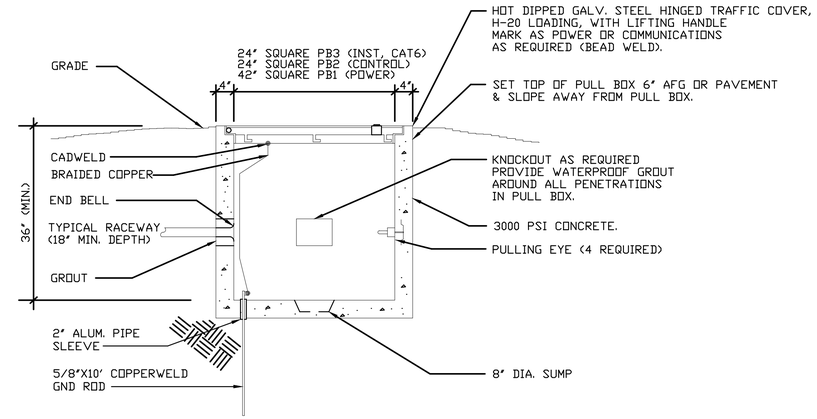

PULLBOX (PB)

NOTES:

1. CONDUCTORS SHALL BE SECURED WITH NYLON SELF CLINCHING CABLE TIES.
2. PROVIDE RACK SUPPORTS FOR CABLES AND CONDUCTORS FOR SIDEWALL MTG..

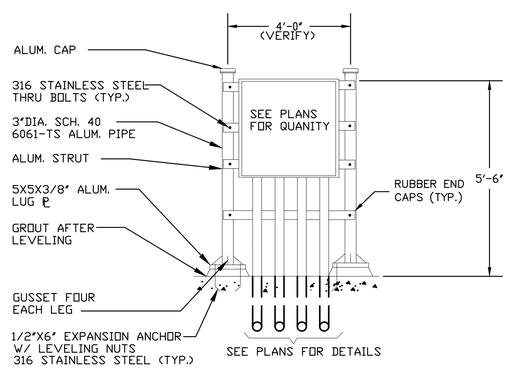

C PANEL MOUNTED DETAIL

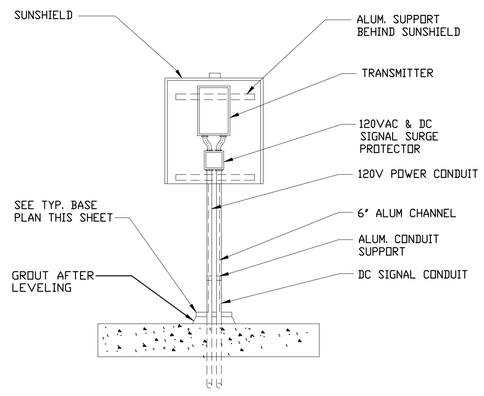

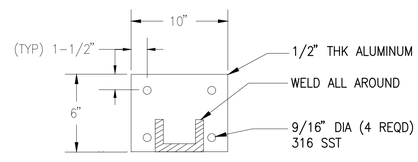

TYPICAL BASE PLAN

D FLOW METER TRANSMITTER MOUNTING

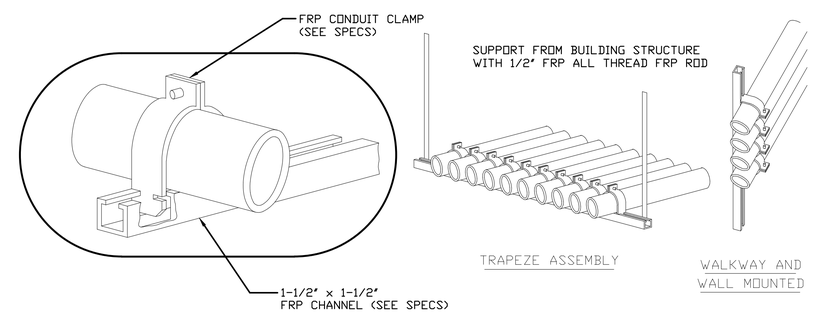

CONDUIT STRAP MOUNTING DETAILS

BID SET

RECORD DRAWINGS			
SURVEYED BY:	DRAWN BY:		
REVIEWED BY:			
PROJECT ENGINEER		DATE	
APPROVED BY:			
CITY ENGINEERING DIRECTOR TARA KIVETT, P.E. #66611		DATE	

REVISION	BY	DATE

CITY OF CLEARWATER, FLORIDA
ENGINEERING DEPARTMENT
100 S. MYRTLE AVE.
CLEARWATER, FL 33756

INVESTIGATE BEFORE YOU EXCAVATE
CALL 811
SUNSHINE STATE ONE CALL OF FLORIDA
www.sunshine811.com
(800) 432-4770
MIN. 48 HOURS BEFORE YOU EXCAVATE

JonesEdmunds
CERTIFICATE OF AUTHORIZATION #1841
730 NE WALDO ROAD, GAINESVILLE, FLORIDA 32641 / (352) 377-5821
324 S HYDE PARK AVE, SUITE 250, TAMPA, FLORIDA 33606 / (813) 258-0703

NE WRF SLUDGE BLEND TANK IMPROVEMENTS
DETAILS 1

DWG NAME: E-09 DETAILS 1.dwg	FIELD BOOK:	SURVEYED BY:	SCALE: VERT.
CONTRACT NO.: 14-0036-UT	DATE DRAWN: AUGUST 2019	DRAWN BY: JPH	HORIZ. AS NOTED
JOB NO.: 03720-048-01	DESIGNED BY: WCH	CHECKED BY: WCH	SHEET NO.: E9
APPROVED FOR CONSTRUCTION			
WILLARD C HOANSHELT, P.E. # 42593			DATE

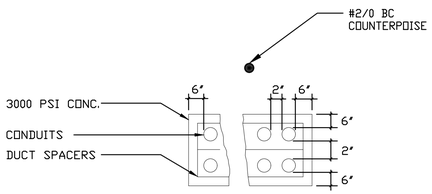

TYPICAL DUCT BANK

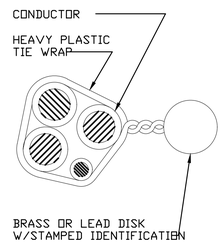

UG CABLE TAG

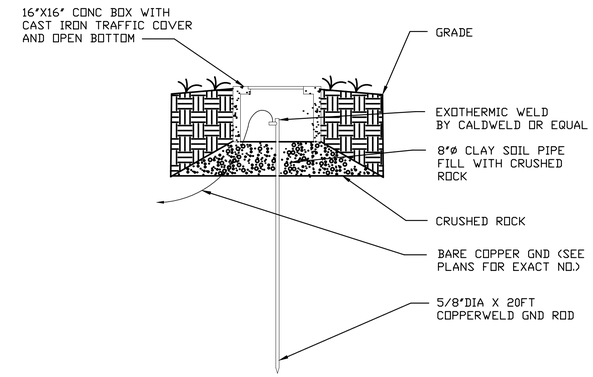

A GROUND ROD & WELL

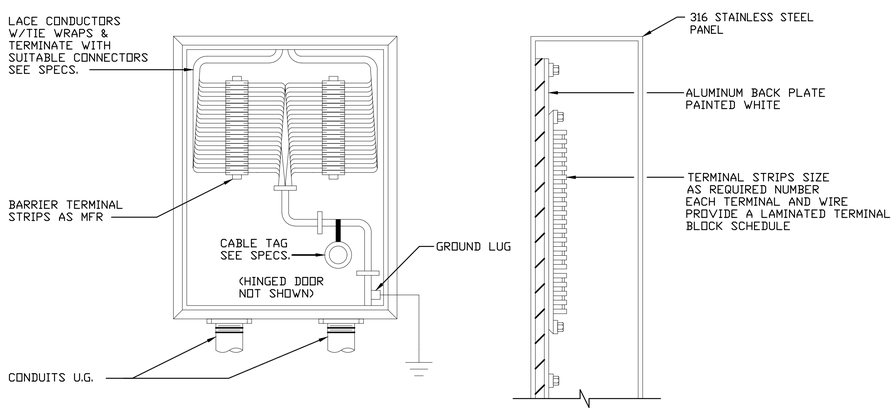

B TYPICAL TERMINAL CABINET

NOT TO SCALE

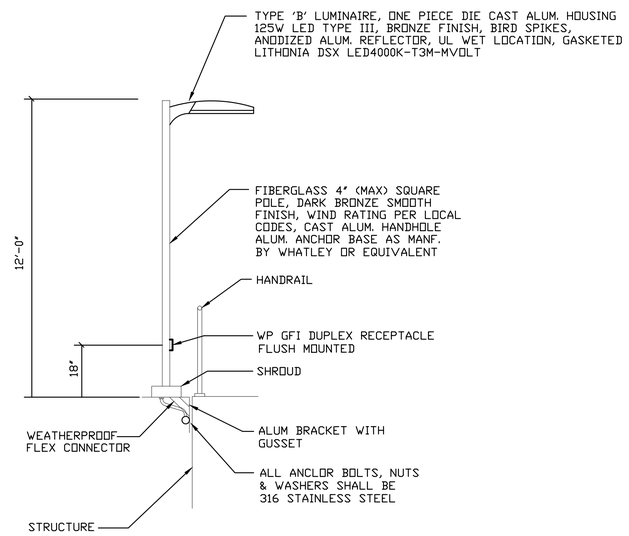

FIXTURE TYPE 'B' STRUCTURE MOUNTED

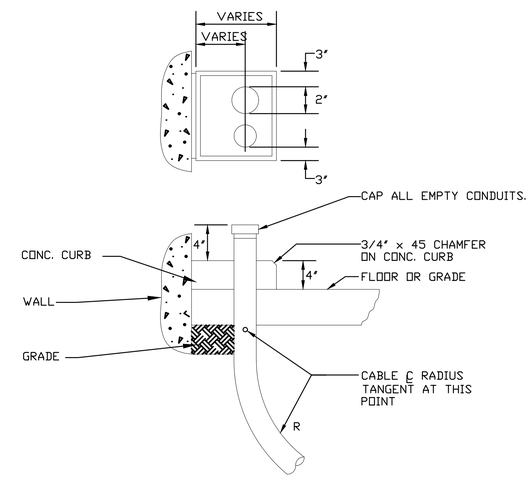

TYPICAL CONDUIT THRU SLAB OR GRADE

BID SET

RECORD DRAWINGS			
SURVEYED BY:	DRAWN BY:		
REVIEWED BY:			
PROJECT ENGINEER	DATE		
APPROVED BY:			
CITY ENGINEERING DIRECTOR TARA KIVETT, P.E. #66611	DATE	REVISION	BY / DATE

CITY OF CLEARWATER, FLORIDA
ENGINEERING DEPARTMENT
100 S. MYRTLE AVE.
CLEARWATER, FL 33756

INVESTIGATE BEFORE YOU EXCAVATE
CALL 811
SUNSHINE STATE ONE CALL OF FLORIDA
www.sunshine811.com
(800) 432-4770
MIN. 48 HOURS BEFORE YOU EXCAVATE

JonesEdmunds
CERTIFICATE OF AUTHORIZATION #1841
730 NE WALDO ROAD, GAINESVILLE, FLORIDA 32641 / (352) 377-5821
324 S HYDE PARK AVE, SUITE 250, TAMPA, FLORIDA 33606 / (813) 258-0703

NE WRF SLUDGE BLEND
TANK IMPROVEMENTS
DETAILS 2

DWG NAME: E10 DETAILS 2.dwg	FIELD BOOK:	SURVEYED BY:	SCALE: VERT. ____ HORIZ. AS NOTED
CONTRACT NO.: 14-0036-UT	DATE DRAWN: AUGUST 2019	DRAWN BY: JPH	
JOB NO.: 03720-048-01	DESIGNED BY: WCH	CHECKED BY: WCH	SHEET NO.: E10
APPROVED FOR CONSTRUCTION			
WILLARD C HOANSHELT, P.E. # 42593			DATE

PLOT DATE: 8/20/2019 11:36 AM CAD AUTODESK

MCC	MOTOR CONTROL CENTER
LCP	LOCAL CONTROL PANEL
SCADA	SUPER VISORARY CONTROL & DATA ACQUISITION

PRESSURE RELIEF
RUPTURE DISK FOR PRESSURE RELIEF
VACUUM RELIEF
RUPTURE DISK FOR VACUUM RELIEF

PIPE MATERIAL ABBR

304SS	304 STAINLESS STEEL
DI	DUCTILE IRON
PVC	POLYVINYL CHLORIDE

FLUID CODE ABBR

CA	CLEANING AIR
CDS	CHEMICAL DOSING
INFLT	INFLUENT
OVRFL	OVERFLOW
PA	PLANT AIR
PRMT	PERMEATE
PW	PLANT WATER
RECYC	RECYCLE
RNS	RINSE

VALVE ACTUATORS

DIAPHRAGM ACTUATOR
LEVER
MOTOR ACTUATOR
HAND WHEEL
SOLENOID ACTUATOR
CHAIN WHEEL
CYLINDER ACTUATOR

LINE CODES

MAJOR PROCESS LINE
MINOR PROCESS LINE
PROCESS/CLEANING AIR
ELECTRICAL
DIGITAL/DATA TO SCADA COMMUNICATION
DESCRIPTION 1 / DESCRIPTION 2 / REF SHT # — PROCESS CONTINUATION

SELF-ACTING REGULATORS

PRESSURE REDUCING
REGULATOR w/ EXTERNAL PILOT
BACK PRESSURE
DIFFERENTIAL PRESSURE

TYPICAL VARIABLE LETTER COMBINATIONS

FIRST LETTERS	INITIATING OR MEASURED VARIABLE	CONTROLLERS				READOUT DEVICES		SWITCHES AND ALARM DEVICES			TRANSMITTERS			SOLENOIDS, RELAYS, COMPUTING DEVICES	PRIMARY ELEMENT	TEST POINT	WELL OR PROBE	VIEWING DEVICE, GLASS	SAFETY DEVICE	FINAL ELEMENT
		RECORDING	INDICATING	BLIND	SELF-ACTUATED CONTROL VALVES	RECORDING	INDICATING	HIGH	LOW	COMB	RECORDING	INDICATING	BLIND							
A	Analysis	ARC	AIC	AC	–	AR	AI	ASH	ASL	ASHL	ART	AIT	AT	AY	AE	AP	AW	–	–	AZ
B	Burner/Combustion	BRC	BIC	BC	–	BR	BI	BSH	BSL	BSHL	BRT	BIT	BT	BY	BE	–	BW	BG	–	BZ
C	User's Choice	–	–	–	–	–	–	–	–	–	–	–	–	–	–	–	–	–	–	–
D	User's Choice	–	–	–	–	–	–	–	–	–	–	–	–	–	–	–	–	–	–	–
E	Voltage	ERC	EIC	EC	–	ER	EI	ESH	ESL	ESHL	ERT	EIT	ET	EY	EE	–	–	–	–	EZ
F	Flow Rate	FRC	FIC	FC	FCV	FR	FI	FSH	FSL	FSHL	FRT	FIT	FT	FY	FE	FP	–	FG	–	FZ
FQ	Flow Quantity	FQRC	FQIC	–	–	FQR	FQI	FQSH	FQSL	FQSHL	–	FQIT	FQT	FQY	FQE	–	–	–	–	FQZ
FF	Flow Ratio	FFRC	FFIC	FFC	–	FFR	FFI	FFSH	FFSL	FFSHL	–	–	–	–	–	–	–	–	–	FFZ
G	User's Choice	–	–	–	–	–	–	–	–	–	–	–	–	–	–	–	–	–	–	–
H	Hand	–	HIC	HC	–	–	–	–	–	–	–	–	–	–	–	–	–	–	–	–
I	Current	IRC	IIC	–	–	IR	II	ISH	ISL	ISHL	IRT	IIT	IT	IY	IE	–	–	–	–	IZ
J	Power	JRC	JIC	–	–	JR	JI	JSH	JSL	JSHL	JRT	JIT	JT	JY	JE	–	–	–	–	JZ
K	Time	KRC	KIC	KC	KCV	KR	KI	KSH	KSL	KSHL	KRT	KIT	KT	KY	KE	–	–	–	–	KZ
L	Level	LRC	LIC	LC	LCV	LR	LI	LSH	LSL	LSHL	LRT	LIT	LT	LY	LE	–	LW	LG	–	LZ
M	User's Choice	–	–	–	–	–	–	–	–	–	–	–	–	–	–	–	–	–	–	–
N	PLC Digital User Interface ✳	–	–	–	–	–	–	–	–	–	–	–	–	–	–	–	–	–	–	–
O	User's Choice	–	–	–	–	–	–	–	–	–	–	–	–	–	–	–	–	–	–	–
P	Pressure/Vacuum	PRC	PIC	PC	PCV	PR	PI	PSH	PSL	PSHL	PRT	PIT	PT	PY	PE	PP	–	–	PSE	PZ
PD	Pressure Differential	PDRC	PDIC	PDC	PDCV	PDR	PDI	PDSH	PDSL	PDSHL	PDRT	PDIT	PDT	PDY	PDE	PDP	–	–	–	PDZ
Q	Quantity	QRC	QIC	–	–	QR	QI	QSH	QSL	QSHL	QRT	QIT	QT	QY	QE	–	RW	–	–	QZ
R	Radiation	RRC	RIC	RC	–	RR	RI	RSH	RSL	RSHL	RRT	RIT	RT	RY	RE	–	–	–	–	RZ
S	Speed/Frequency	SRC	SIC	SC	SCV	SR	SI	SSH	SSL	SSHL	SRT	SIT	ST	SY	SE	–	–	–	–	SZ
T	Temperature	TRC	TIC	TC	TCV	TR	TI	TSH	TSL	TSHL	TRT	TIT	TT	TY	TE	TP	TPW	–	TSE	TZ
TD	Temperature Differential	TDRC	TDIC	TDC	TDCV	TDR	TDI	TDSH	TDSL	TDSHL	TDRT	TDIT	TDT	TDY	TDE	TDP	TDPW	–	–	TDZ
U	Multivariable	–	–	–	–	UR	UI	–	–	–	–	–	–	–	–	–	–	–	–	–
V	Vibration/Machinery Analysis	–	–	–	–	VR	VI	VSH	VSL	VSHL	VRT	VIT	VT	VY	VE	–	–	–	–	VZ
W	Weight/Force	WRC	WIC	WC	WCV	WR	WI	WSH	WSL	WSHL	WRT	WIT	WT	WY	WE	–	–	–	–	WZ
WD	Weight/Force Differntial	WDRC	WDIC	WDC	WDCV	WDR	WDI	WDSH	WDSL	WDSHL	WDRT	WDIT	WDT	WDY	WDE	–	–	–	–	WDZ
X	Unclassified	–	–	–	–	–	–	–	–	–	–	–	–	–	–	–	–	–	–	–
Y	Event/State/Presence	–	YIC	YC	–	YR	YI	YSH	YSL	YSHL	YRT	YIT	YT	YY	YE	–	–	–	–	YZ
Z	Position/Dimension	ZRC	ZIC	ZC	ZCV	ZR	ZI	ZSH	ZSL	ZSHL	ZRT	ZIT	ZT	ZY	ZE	–	–	–	–	ZZ
ZD	Gauging/Deviation	ZDRC	ZDIC	ZDC	ZDCV	ZDR	ZDI	ZDSH	ZDSL	ZDSHL	ZDRT	ZDIT	ZDT	ZDY	ZDE	–	–	–	–	ZDZ

NOTE: This table is not all-inclusive.

✳ TRANSMIT AND DISPLAY ALL AVAILABLE DATA, REFER TO THE SPECIFICATIONS FOR ADDITIONAL CONTROL/STATUS AND ALARM FUNCTIONS.

PIPING SYMBOLS

NC NO
GATE VALVE
GLOBE VALVE
BALL VALVE
3-WAY BALL VALVE
PLUG VALVE
LUGGED BUTTERFLY VALVE
BUTTERFLY VALVE
CHECK VALVE
DOUBLE LEAF CHECK VALVE
BLIND SPECTACLE
SLIDE GATE
BLIND FLANGE
WELDED CAP
SCREWED CAP
CAMLOCK FITTING
FLEXIBLE LINE
FUNNEL
UNION
REDUCER

INLINE INSTRUMENTS

NOZZLE
MAGNETIC ELEMENT
ORIFICE
VENTURI
VARIABLE AREA
PITOT
TARGET
AVERAGING PITOT
VORTEX SHEDDING
TURBINE
POSITIVE DISPLACEMENT
SONIC
SENSOR

MECHANICAL EQUIPMENT

SUBMERSIBLE MIXER
GRINDER
MOTOR DRIVE
SUBMERSIBLE PUMP
CENTRIFUGAL PUMP
BLOWER
BLOWER AIR FILTER
ULTRA SONIC LEVEL TRANSMITTER
ROTARY LOBE PUMP
DIAPHRAGM METERING PUMP
PROGRESSIVE CAVITY PUMP

GENERAL INSTRUMENT OR FUNCTION SYMBOLS

	FIELD MOUNTED	PRIMARY LOCATION ACCESSIBLE TO OPERATOR	PRIMARY LOCATION INACCESSIBLE TO OPERATOR	AUXILIARY LOCATION ACCESSIBLE TO OPERATOR
DISCRETE INSTRUMENTS				
SHARED DISPLAY SHARED CONTROL				
COMPUTER FUNCTION				
PROGRAMMABLE LOGIC CONTROL				
EXISTING OR SUPPLIED BY OTHERS				

HARDWARE INTERLOCK OR RELAY
DCS "SOFT" INTERLOCK

THIS ITEM HAS BEEN DIGITALLY SIGNED AND SEALED BY WILLARD C. HOANSHELT, PE (FL#42593) ON THE DATE INDICATED USING A DIGITAL SIGNATURE.

PRINTED COPIES OF THIS DOCUMENT ARE NOT CONSIDERED SIGNED AND SEALED AND THE SIGNATURE MUST BE VERIFIED ON ANY ELECTRONIC COPIES.

WILLARD C. HOANSHELT LICENSE No. 42593 STATE OF FLORIDA PROFESSIONAL ENGINEER

BID SET

RECORD DRAWINGS
SURVEYED BY: DRAWN BY:
REVIEWED BY: PROJECT ENGINEER DATE
APPROVED BY: CITY ENGINEERING DIRECTOR TARA KIVETT, P.E. #86611 DATE

REVISION | BY | DATE

CITY OF CLEARWATER, FLORIDA
ENGINEERING DEPARTMENT
100 S. MYRTLE AVE.
CLEARWATER, FL 33756

INVESTIGATE BEFORE YOU EXCAVATE
CALL 811
SUNSHINE STATE ONE CALL OF FLORIDA
www.sunshine811.com
(800) 432-4770
MIN. 48 HOURS BEFORE YOU EXCAVATE

JonesEdmunds
CERTIFICATE OF AUTHORIZATION #1841
730 NE WALDO ROAD, GAINESVILLE, FLORIDA 32641 / (352) 377-5821
324 S HYDE PARK AVE, SUITE 250, TAMPA, FLORIDA 33606 / (813) 258-0703

NE WRF SLUDGE BLEND TANK IMPROVEMENTS
SYMBOLS

DWG NAME: I-01 SYMBOLS.dwg	FIELD BOOK:	SURVEYED BY:	SCALE: VERT.
CONTRACT NO.: 14-0036-UT	DATE DRAWN: AUGUST 2019	DRAWN BY: JPH	HORIZ. AS NOTED
JOB NO.: 03720-048-01	DESIGNED BY: WCH	CHECKED BY: WCH	SHEET NO.: I1

APPROVED FOR CONSTRUCTION
WILLARD C HOANSHELT, P.E. # 42593 DATE

LAST SAVED: 8/20/2019 8:21 AM CAUTODESK DWG LOCATION:\\TPA-MAIN\DRAFTING\03720 CLEARWATER\048-01 NE BLEND TANK IMPROVEMENTS\CONTRACT DRAWINGS\ELEC-INSTRUM\I-01 SYMBOLS.DWG

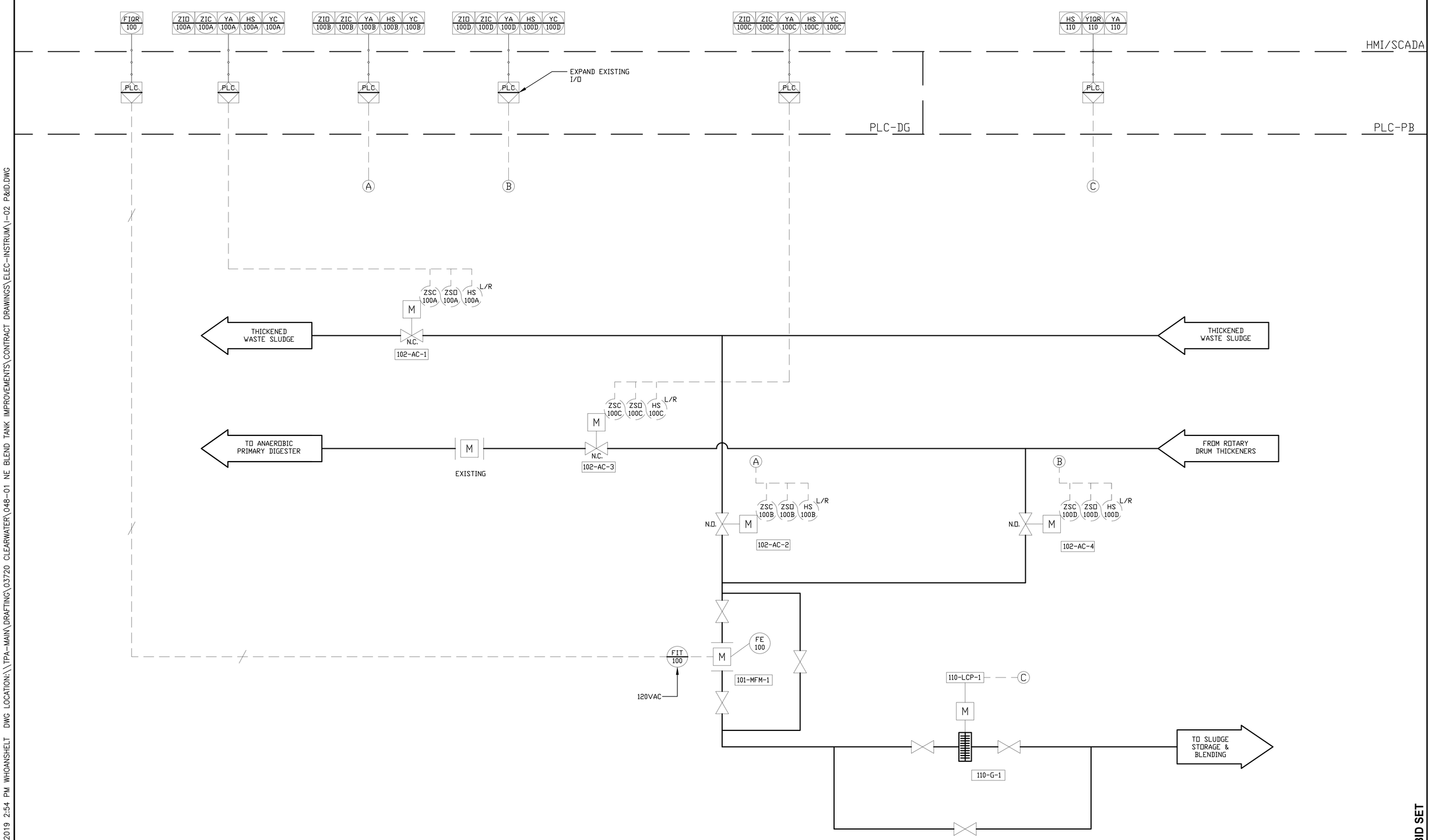

BID SET

RECORD DRAWINGS	
SURVEYED BY:	DRAWN BY:
REVIEWED BY: PROJECT ENGINEER	DATE
APPROVED BY: CITY ENGINEERING DIRECTOR TARA KIVETT, P.E. #66611	DATE

REVISION	BY	DATE

CITY OF CLEARWATER, FLORIDA
ENGINEERING DEPARTMENT
100 S. MYRTLE AVE.
CLEARWATER, FL 33756

WHEN YOU DIG, CALL 811 SUNSHINE STATE ONE CALL OF FLORIDA www.sunshine811.com (800) 432-4770 MIN. 48 HOURS BEFORE YOU EXCAVATE

JonesEdmunds
CERTIFICATE OF AUTHORIZATION #1841
730 NE WALDO ROAD, GAINESVILLE, FLORIDA 32641 / (352) 377-5821
324 S HYDE PARK AVE, SUITE 250, TAMPA, FLORIDA 33606 / (813) 258-0703

NE WRF SLUDGE BLEND TANK IMPROVEMENTS
SLUDGE VALVE STATION–P&ID

DWG NAME: I-02 P&ID.dwg	FIELD BOOK:	SURVEYED BY:	SCALE: VERT.
CONTRACT NO.: 14-0036-UT	DATE DRAWN: AUGUST 2019	DRAWN BY: JPH	HORIZ. AS NOTED
JOB NO.: 03720-048-01	DESIGNED BY: WCH	CHECKED BY: WCH	SHEET NO.: I2
APPROVED FOR CONSTRUCTION			
WILLARD C HOANSHELT, P.E. # 42593			DATE

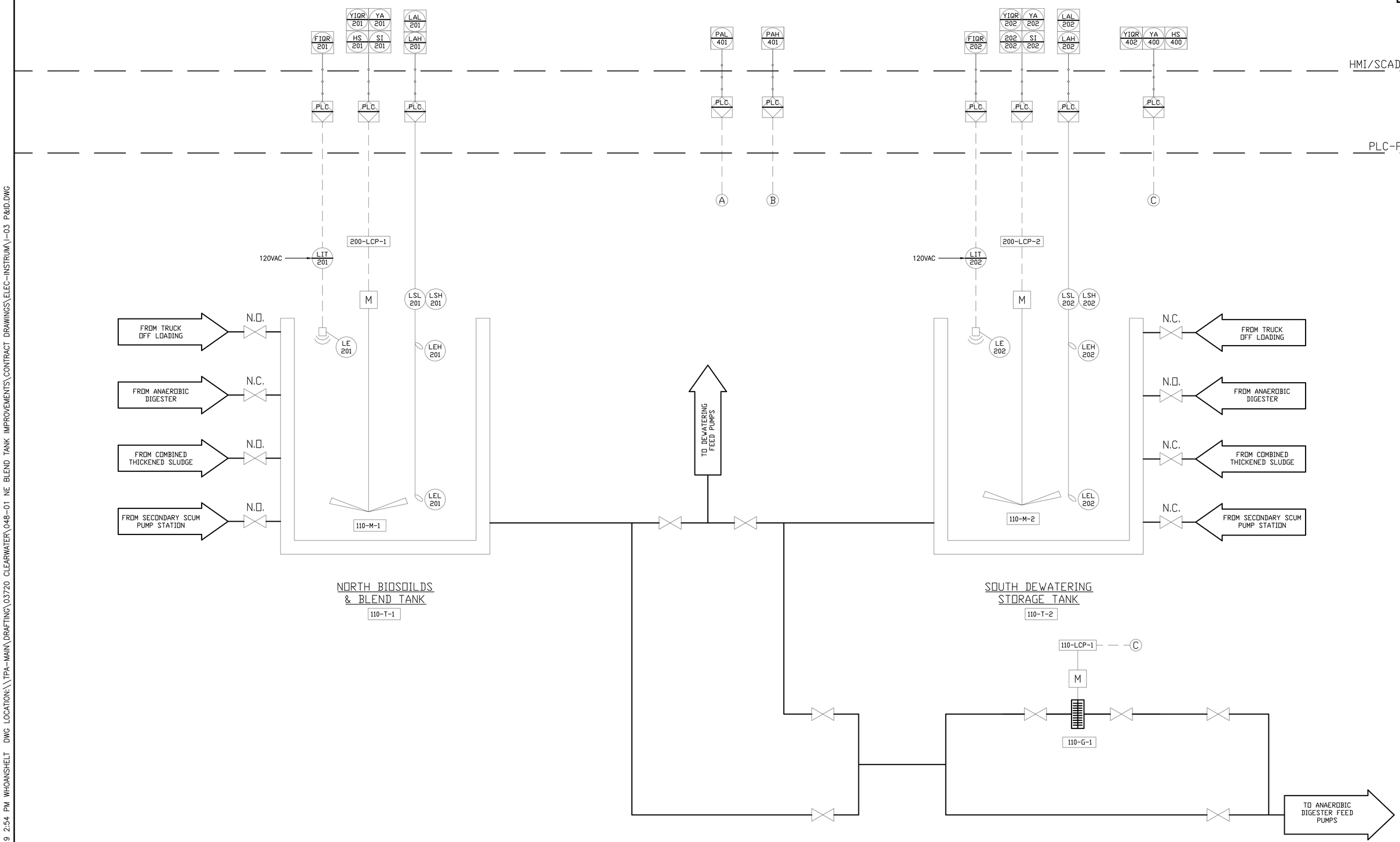

BID SET

LAST SAVED: 7/25/2019 2:54 PM WHOANSHELT DWG LOCATION:\\TPA-MAIN\DRAFTING\03720 CLEARWATER\048-01 NE BLEND TANK IMPROVEMENTS\CONTRACT DRAWINGS\ELEC-INSTRUM\I-03 P&ID.DWG

RECORD DRAWINGS

SURVEYED BY: DRAWN BY:

REVIEWED BY: PROJECT ENGINEER DATE

APPROVED BY: CITY ENGINEERING DIRECTOR TARA KIVETT, P.E. #86611 DATE

REVISION | BY | DATE

CITY OF CLEARWATER, FLORIDA
ENGINEERING DEPARTMENT
100 S. MYRTLE AVE.
CLEARWATER, FL 33756

INVESTIGATE BEFORE YOU EXCAVATE
CALL 811
SUNSHINE STATE ONE CALL OF FLORIDA
www.sunshine811.com
(800) 432-4770
MIN. 48 HOURS BEFORE YOU EXCAVATE

JonesEdmunds
CERTIFICATE OF AUTHORIZATION #1841
730 NE WALDO ROAD, GAINESVILLE, FLORIDA 32641 / (352) 377-5821
324 S HYDE PARK AVE, SUITE 250, TAMPA, FLORIDA 33606 / (813) 258-0703

NE WRF SLUDGE BLEND TANK IMPROVEMENTS
SLUDGE STORAGE/BLEND TANKS- P&ID

DWG NAME: I-03 P&ID.dwg	FIELD BOOK:	SURVEYED BY:	SCALE: VERT.
CONTRACT NO.: 14-0036-UT	DATE DRAWN: AUGUST 2019	DRAWN BY: JPH	HORIZ. AS NOTED
JOB NO.: 03720-048-01	DESIGNED BY: WCH	CHECKED BY: WCH	SHEET NO.: 13

APPROVED FOR CONSTRUCTION

WILLARD C HOANSHELT, P.E. # 42593 DATE

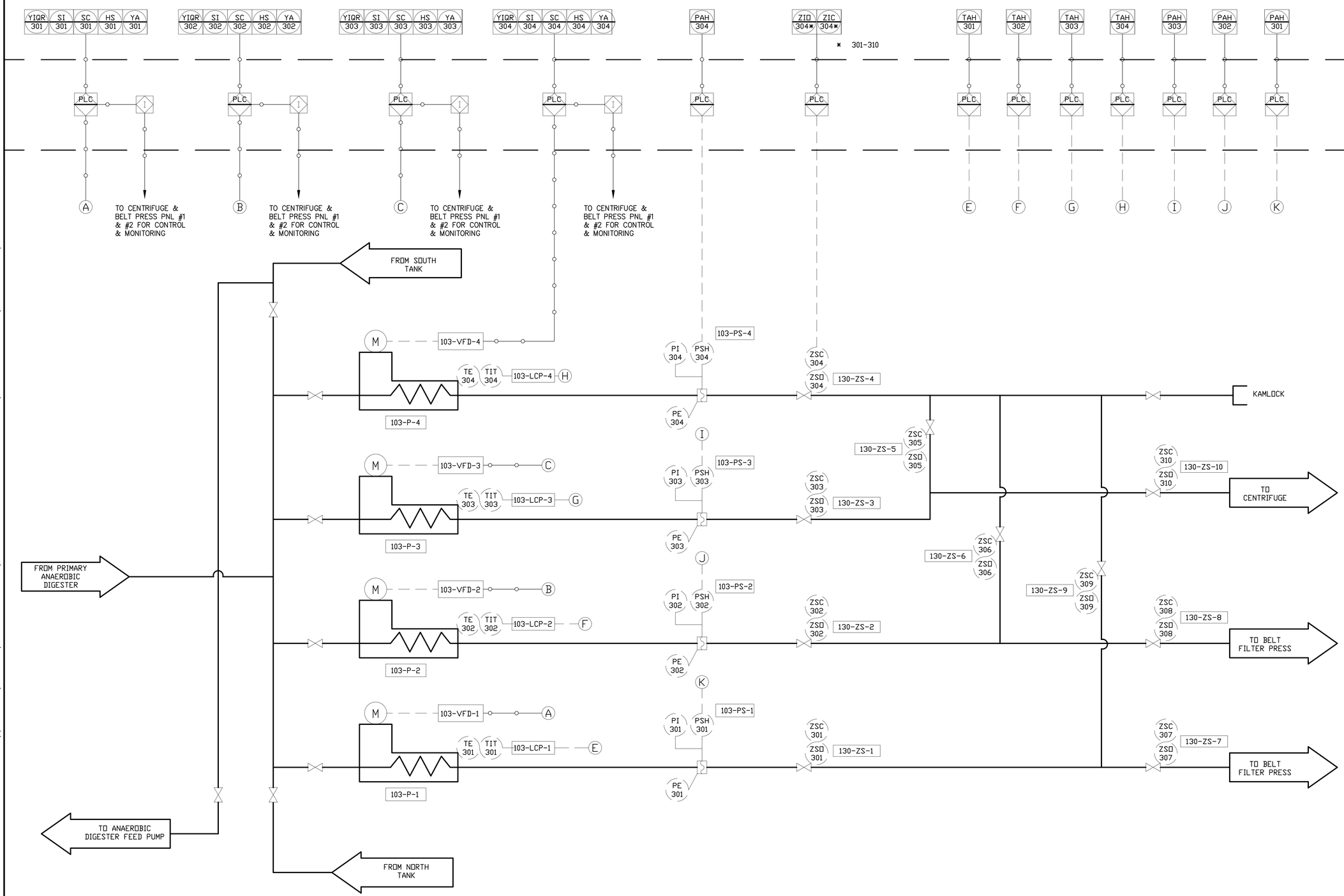

BID SET

RECORD DRAWINGS				
SURVEYED BY:	DRAWN BY:			
REVIEWED BY:	PROJECT ENGINEER	DATE		
APPROVED BY:	CITY ENGINEERING DIRECTOR TARA KIVETT, P.E. #86611	DATE		
			REVISION	BY	DATE

CITY OF CLEARWATER, FLORIDA
ENGINEERING DEPARTMENT
100 S. MYRTLE AVE.
CLEARWATER, FL 33756

INVESTIGATE BEFORE YOU EXCAVATE
CALL 811
SUNSHINE STATE ONE CALL OF FLORIDA
www.sunshine811.com
(800) 432-4770
MIN. 48 HOURS BEFORE YOU EXCAVATE

JonesEdmunds
CERTIFICATE OF AUTHORIZATION #1841
730 NE WALDO ROAD, GAINESVILLE, FLORIDA 32641 / (352) 377-5821
324 S HYDE PARK AVE, SUITE 250, TAMPA, FLORIDA 33606 / (813) 258-0703

NE WRF SLUDGE BLEND TANK IMPROVEMENTS
DEWATERING FEED PUMPS
P&ID

DWG NAME: I-04 P&ID.dwg	FIELD BOOK:	SURVEYED BY:	SCALE: VERT.
CONTRACT NO.: 14-0036-UT	DATE DRAWN: AUGUST 2019	DRAWN BY: JPH	HORIZ. AS NOTED
JOB NO.: 03720-048-01	DESIGNED BY: WCH	CHECKED BY: WCH	SHEET NO.: I4
APPROVED FOR CONSTRUCTION	WILLARD C HOANSHELT, P.E. # 42593		DATE

LAST SAVED: 7/25/2019 2:54 PM WHOANSHELT DWG LOCATION:\\TPA-MAIN\DRAFTING\03720 CLEARWATER\048-01 NE BLEND TANK IMPROVEMENTS\CONTRACT DRAWINGS\ELEC-INSTRUM\I-04 P&ID.DWG

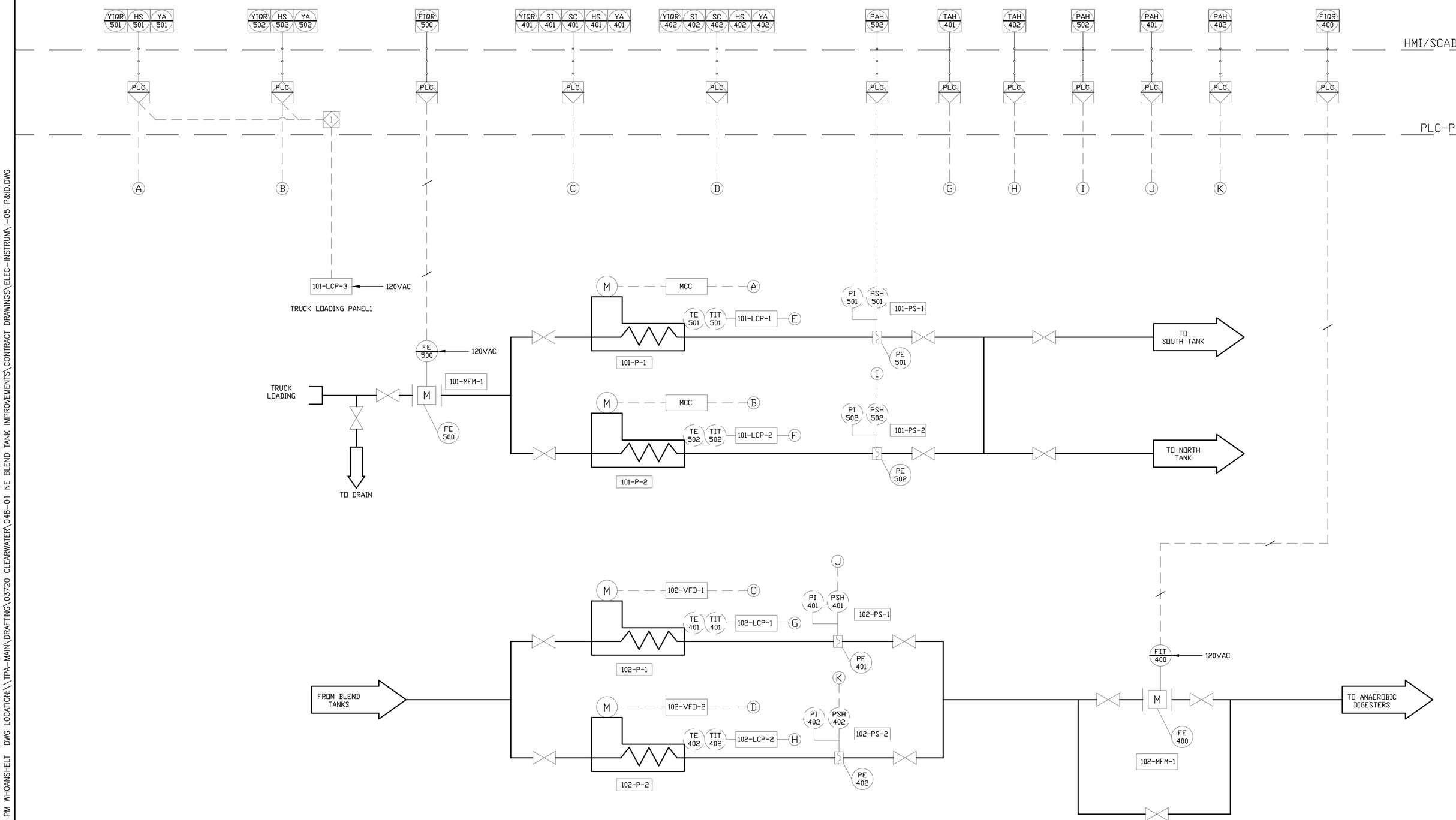

BID SET

RECORD DRAWINGS			
SURVEYED BY:	DRAWN BY:		
REVIEWED BY:	PROJECT ENGINEER	DATE	
APPROVED BY:	CITY ENGINEERING DIRECTOR TARA KIVETT, P.E. #86611	DATE	
REVISION	BY	DATE	

CITY OF CLEARWATER, FLORIDA
ENGINEERING DEPARTMENT
100 S. MYRTLE AVE.
CLEARWATER, FL 33756

CALL 811 SUNSHINE STATE ONE CALL OF FLORIDA
www.sunshine811.com
(800) 432-4770
MIN. 48 HOURS BEFORE YOU EXCAVATE

JonesEdmunds
CERTIFICATE OF AUTHORIZATION #1841
730 NE WALDO ROAD, GAINESVILLE, FLORIDA 32641 / (352) 377-5821
324 S HYDE PARK AVE, SUITE 250, TAMPA, FLORIDA 33606 / (813) 258-0703

NE WRF SLUDGE BLEND TANK IMPROVEMENTS
TRUCK OFF LOAD/DIGESTER PUMPS– P&ID

DWG NAME: I-05 P&ID.dwg	FIELD BOOK:	SURVEYED BY:	SCALE: VERT.
CONTRACT NO.: 14-0036-UT	DATE DRAWN: AUGUST 2019	DRAWN BY: JPH	HORIZ. AS NOTED
JOB NO.: 03720-048-01	DESIGNED BY: WCH	CHECKED BY: WCH	SHEET NO.: I5
APPROVED FOR CONSTRUCTION	WILLARD C HOANSHELT, P.E. # 42593		DATE

LAST SAVED: 7/25/2019 2:54 PM WHOANSHELT DWG LOCATION:\\TPA-MAIN\DRAFTING\03720 CLEARWATER\048-01 NE BLEND TANK IMPROVEMENTS\CONTRACT DRAWINGS\ELEC-INSTRUM\I-05 P&ID.DWG

PHOTO: PLC-PB

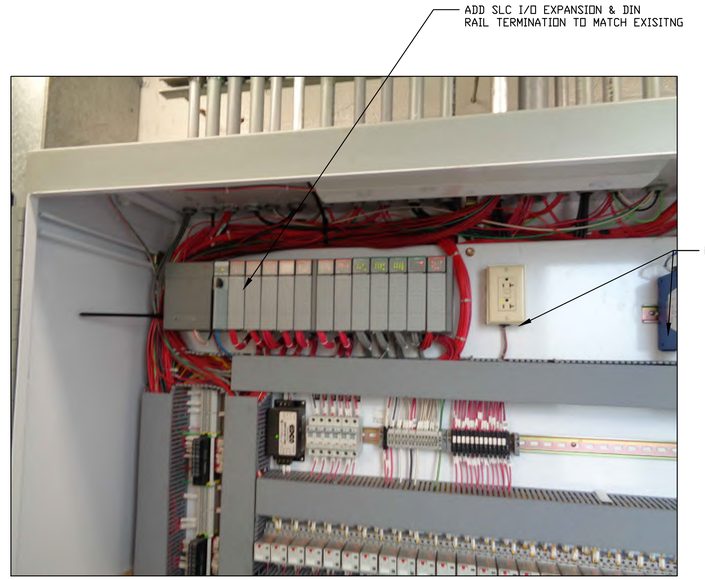

PHOTO: PLC-DG

PHOTO: CAMERA LOCATIONS

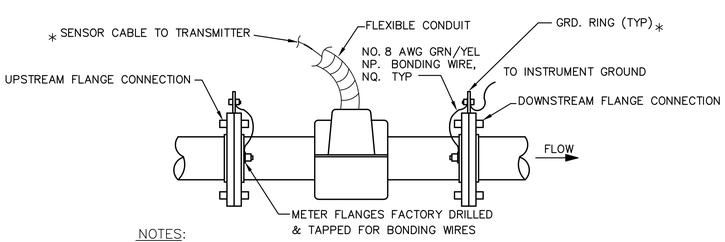

NOTES:

1. COMPONENTS DESIGNATED BY * ARE SUPPLIED BY INSTRUMENT MANUFACTURER.
2. IF PIPE IS NON-CONDUCTIVE BOND MAGMETER TO ONE OF THE FOLLOWING ACCEPTABLE GROUNDS:
   A) METALLIC WATER PIPE IF BURIED PORTION IS MORE THAN 10'.
   B) STRUCTURAL STEEL.

MAGNETIC FLOWMETER INSTALLATION DETAIL

NOT TO SCALE

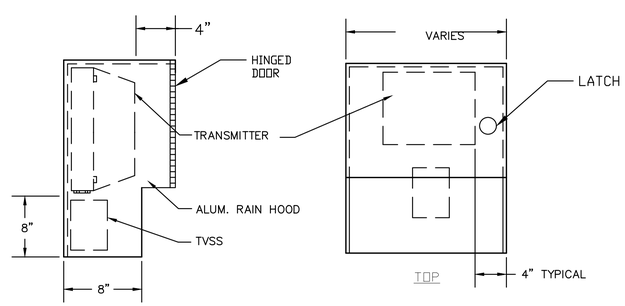

NOTES:

1. SUN SHIELD SHALL BE 10 GA. ALUMINUM CONTINUOUS WELD, GROUND SMOOTH AND BURR FREE. DRILL HOLES AS PER MOUNTING HOLES FOR INSTRUMENT.

TYPICAL SUNSHIELD MOUNTING DETAIL

NOT TO SCALE

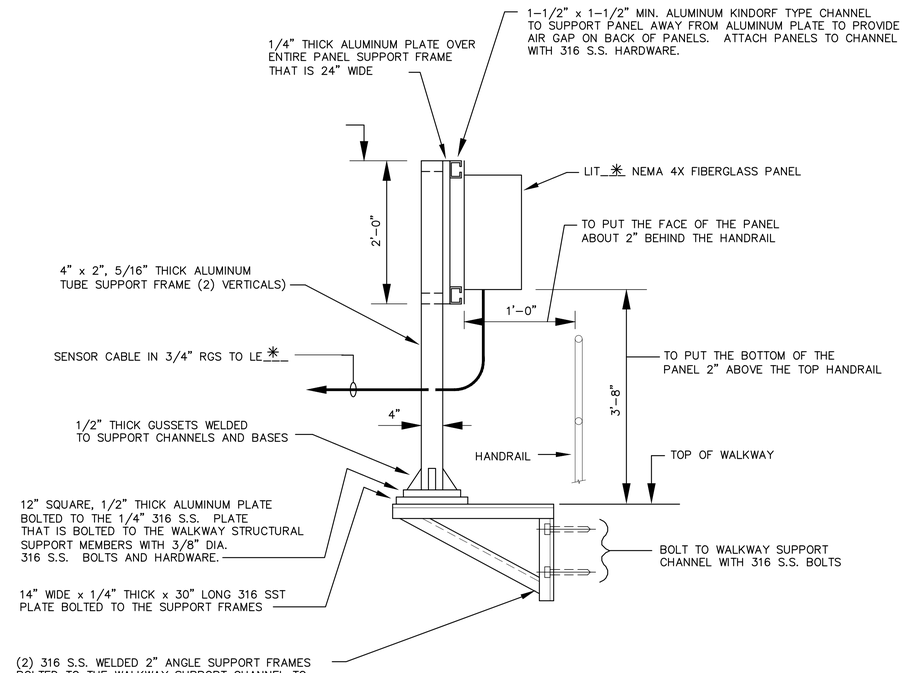

TYPICAL PANEL MOUNTING DETAIL FOR LEVEL TRANSMITTER ENCLOSURES WHEN MOUNTED ON WALKWAYS AND PLATFORMS WITH HANDRAILS

N.T.S.

BID SET

RECORD DRAWINGS			
SURVEYED BY:	DRAWN BY:		
REVIEWED BY:			
PROJECT ENGINEER	DATE		
APPROVED BY:			
CITY ENGINEERING DIRECTOR TARA KIVETT, P.E. #66611	DATE	REVISION	BY / DATE

CITY OF CLEARWATER, FLORIDA
ENGINEERING DEPARTMENT
100 S. MYRTLE AVE.
CLEARWATER, FL 33756

INVESTIGATE BEFORE YOU EXCAVATE
CALL 811
SUNSHINE STATE ONE CALL OF FLORIDA
www.sunshine811.com
(800) 432-4770
MIN. 48 HOURS BEFORE YOU EXCAVATE

JonesEdmunds
CERTIFICATE OF AUTHORIZATION #1841
730 NE WALDO ROAD, GAINESVILLE, FLORIDA 32641 / (352) 377-5821
324 S HYDE PARK AVE, SUITE 250, TAMPA, FLORIDA 33606 / (813) 258-0703

NE WRF SLUDGE BLEND TANK IMPROVEMENTS
DETAILS 1

DWG NAME: I-06 DETAILS.dwg	FIELD BOOK:	SURVEYED BY:	SCALE: VERT.
CONTRACT NO.: 14-0036-UT	DATE DRAWN: AUGUST 2019	DRAWN BY: JPH	HORIZ. AS NOTED
JOB NO.: 03720-048-01	DESIGNED BY: WCH	CHECKED BY: WCH	SHEET NO.: I6
APPROVED FOR CONSTRUCTION			
	WILLARD C HOANSHELT, P.E. # 42593		DATE

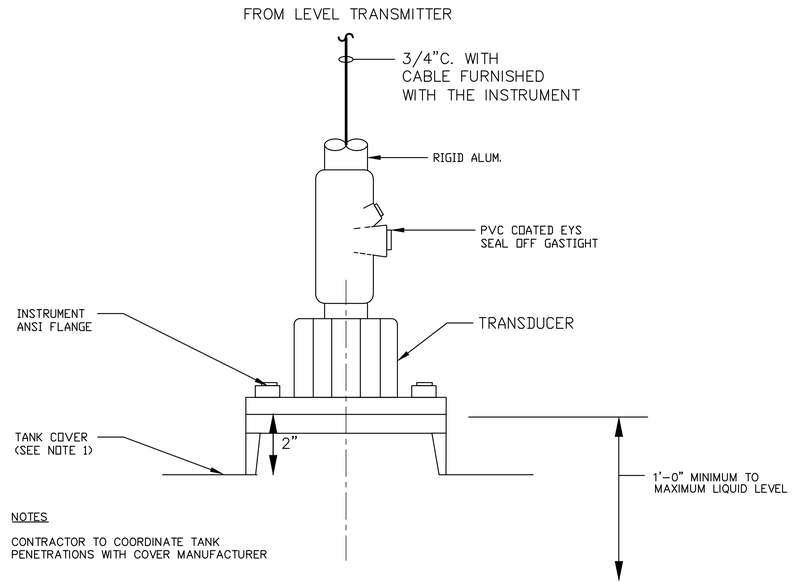

NOTES

CONTRACTOR TO COORDINATE TANK PENETRATIONS WITH COVER MANUFACTURER

TYPICAL PROBE MOUNTING DETAIL FOR LEVEL TRANSDUCTERS

N.T.S.

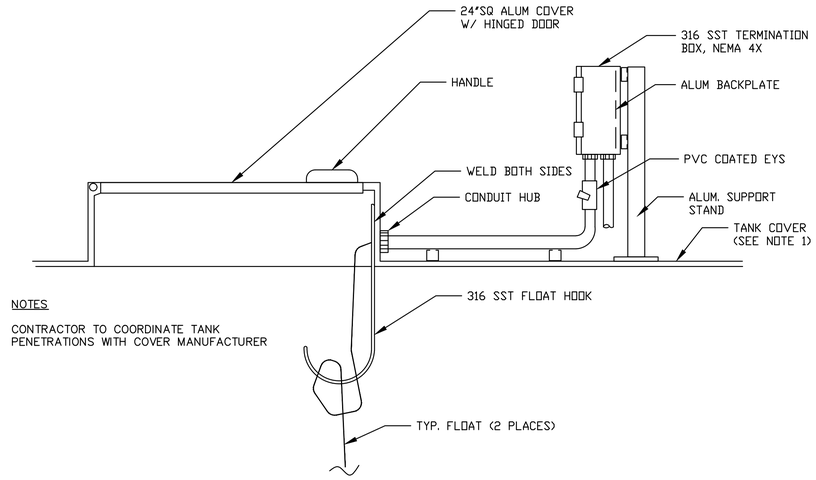

NOTES

CONTRACTOR TO COORDINATE TANK PENETRATIONS WITH COVER MANUFACTURER

TYPICAL FLOAT MOUNTING DETAIL FOR BLEND TANKS

N.T.S.

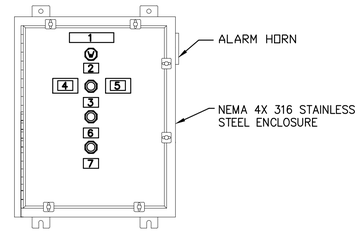

NAMEPLATE LEGEND

1 – TRUCK LOADING PANEL
2 – POWER ON
3 – RESET
4 – SLUDGE HOLDING TANK #1 LEVEL
5 – SLUDGE HOLDING TANK #2 LEVEL
6 – PUMP START
7 – PUMP STOP

TRUCK LOADING PANEL FRONT VIEW

101-LCP-3

EDIT GRAPHICS TO INCLUDE SLUDGE FEED PUMP PIPING & OPERATOR SELECTION OF FEED PUMP & SPEED CONTROL (REFER TO FUNCTIONAL DESCRIPTION IN THE SPECIFICATIONS)

CONTROL PNL W/ COMPACT LOGIX PLC & OIT. (PANELVIEW PLUS)

PHOTO – CENTRIFUGE PNL

MODIFY PANEL TO PROVIDE 120VAC FUSED FOR OIT

TYPICAL BELT PRESS PANEL WITH CONTROLLOGIX PROCESSOR #1756-L72 & ETHERNET/IP BRIDGE # 1756-EN2T

PHOTO BELT PRESS No.2 PNL

PANELVIEW PLUS 7, 9 INCH COLOR DISPLAY, NEMA 4X STAINLESS STEEL, CONFORMALLY COATED, FACTORY TALK (TYP. 2 PLACES)

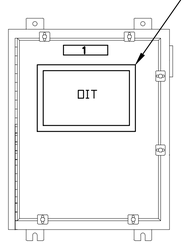

NAMEPLATE LEGEND

1 – BELT PRESS #2 FEED PUMP PANEL

MODIFY PANEL TO PROVIDE 120VAC FUSED FOR OIT

PHOTO BELT PRESS No.1 PNL

CREATE GRAPHIC FOR EACH SLUDGE FEED PUMP TO CONTROL SPEED & CONFIRM AVAILABILITY (TYP. 2 PLACES)

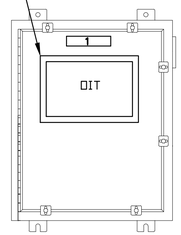

NAMEPLATE LEGEND

1 – BELT PRESS #1 FEED PUMP PANEL

BID SET

LAST SAVED: 7/25/2019 2:54 PM WHOANSHELT DWG LOCATION:\\TPA-MAIN\DRAFTING\03720 CLEARWATER\048-01 NE BLEND TANK IMPROVEMENTS\CONTRACT DRAWINGS\ELEC-INSTRUM\I-07 DETAILS.DWG

RECORD DRAWINGS			
SURVEYED BY:	DRAWN BY:		
REVIEWED BY:			
PROJECT ENGINEER	DATE		
APPROVED BY:			
CITY ENGINEERING DIRECTOR TARA KIVETT, P.E. #86611	DATE		
REVISION	BY	DATE	

CITY OF CLEARWATER, FLORIDA
ENGINEERING DEPARTMENT
100 S. MYRTLE AVE.
CLEARWATER, FL 33756

INVESTIGATE BEFORE YOU EXCAVATE
CALL 811
SUNSHINE STATE ONE CALL OF FLORIDA
www.sunshine811.com
(800) 432-4770
MIN. 48 HOURS BEFORE YOU EXCAVATE

JonesEdmunds
CERTIFICATE OF AUTHORIZATION #1841
730 NE WALDO ROAD, GAINESVILLE, FLORIDA 32641 / (352) 377-5821
324 S HYDE PARK AVE, SUITE 250, TAMPA, FLORIDA 33606 / (813) 258-0703

NE WRF SLUDGE BLEND TANK IMPROVEMENTS
DETAILS 2

DWG NAME: I-07 DETAILS.dwg	FIELD BOOK:	SURVEYED BY:	SCALE: VERT.
CONTRACT NO.: 14-0036-UT	DATE DRAWN: AUGUST 2019	DRAWN BY: JPH	HORIZ. AS NOTED
JOB NO.: 03720-048-01	DESIGNED BY: WCH	CHECKED BY: WCH	SHEET NO.: I7
APPROVED FOR CONSTRUCTION	WILLARD C HOANSHELT, P.E. # 42593		DATE

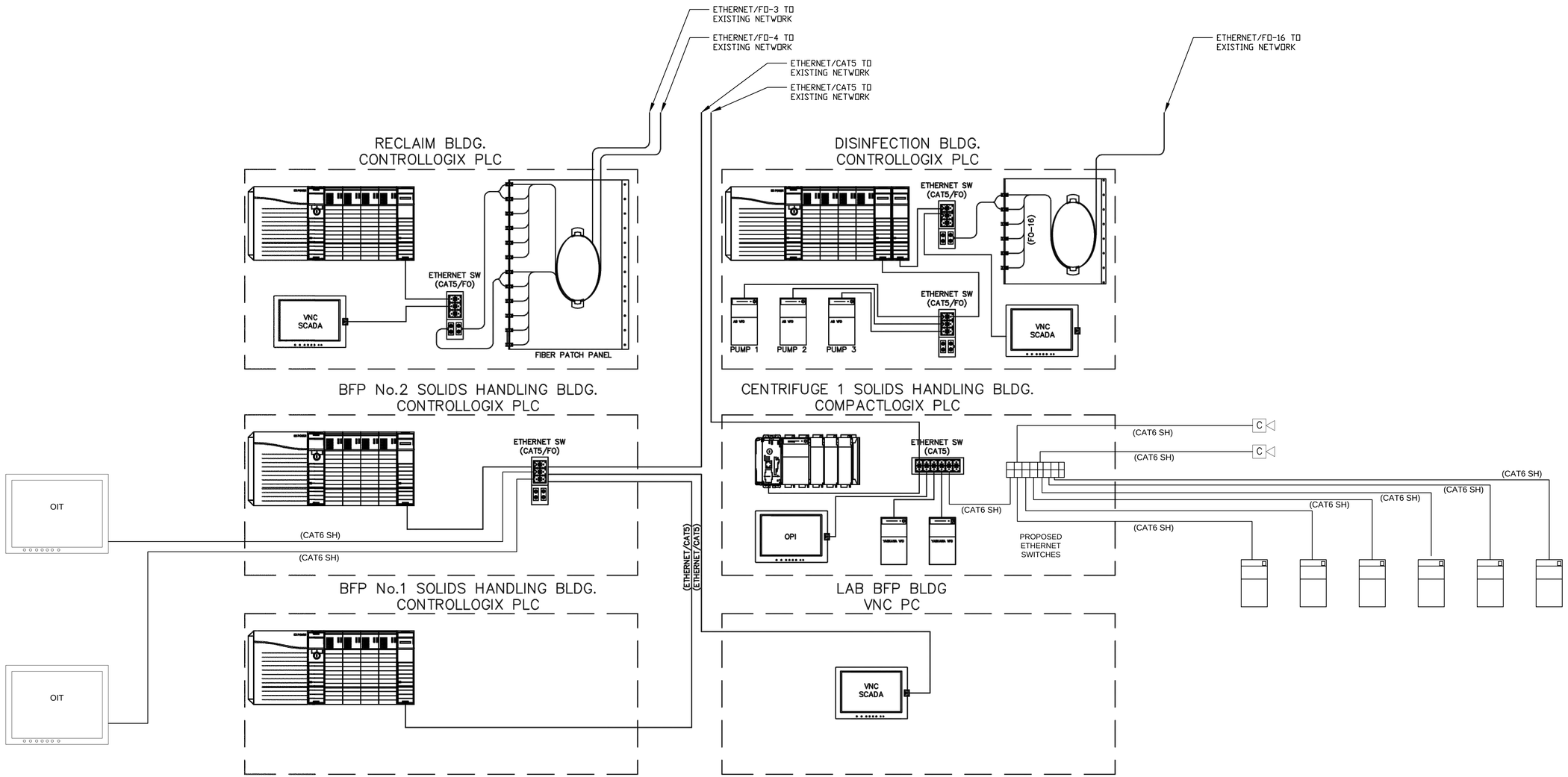

BID SET

RECORD DRAWINGS				
SURVEYED BY:	DRAWN BY:			
REVIEWED BY: PROJECT ENGINEER	DATE			
APPROVED BY: CITY ENGINEERING DIRECTOR TARA KIVETT, P.E. #66611	DATE	REVISION	BY	DATE

CITY OF CLEARWATER, FLORIDA
ENGINEERING DEPARTMENT
100 S. MYRTLE AVE.
CLEARWATER, FL 33756

INVESTIGATE BEFORE YOU EXCAVATE
CALL 811
SUNSHINE STATE ONE CALL OF FLORIDA
www.sunshine811.com
(800) 432-4770
MIN. 48 HOURS BEFORE YOU EXCAVATE

JonesEdmunds
CERTIFICATE OF AUTHORIZATION #18441
730 NE WALDO ROAD, GAINESVILLE, FLORIDA 32641 / (352) 377-5821
324 S HYDE PARK AVE, SUITE 250, TAMPA, FLORIDA 33606 / (813) 258-0703

NE WRF SLUDGE BLEND TANK IMPROVEMENTS
NETWORK DIAGRAM

DWG NAME: I-08 NETWORK.dwg	FIELD BOOK:	SURVEYED BY:	SCALE: VERT.
CONTRACT NO.: 14-0036-UT	DATE DRAWN: AUGUST 2019	DRAWN BY: JPH	HORIZ. AS NOTED
JOB NO.: 03720-048-01	DESIGNED BY: WCH	CHECKED BY: WCH	SHEET NO.: 17
APPROVED FOR CONSTRUCTION	WILLARD C HOANSHELT, P.E. # 42593		DATE

LAST SAVED: 7/25/2019 2:54 PM JPH19 DWG LOCATION:\\TPA-MAIN\DRAFTING\03720 CLEARWATER\048-01 NE BLEND TANK IMPROVEMENTS\CONTRACT DRAWINGS\ELEC-INSTRUM\I-08 NETWORK.DWG