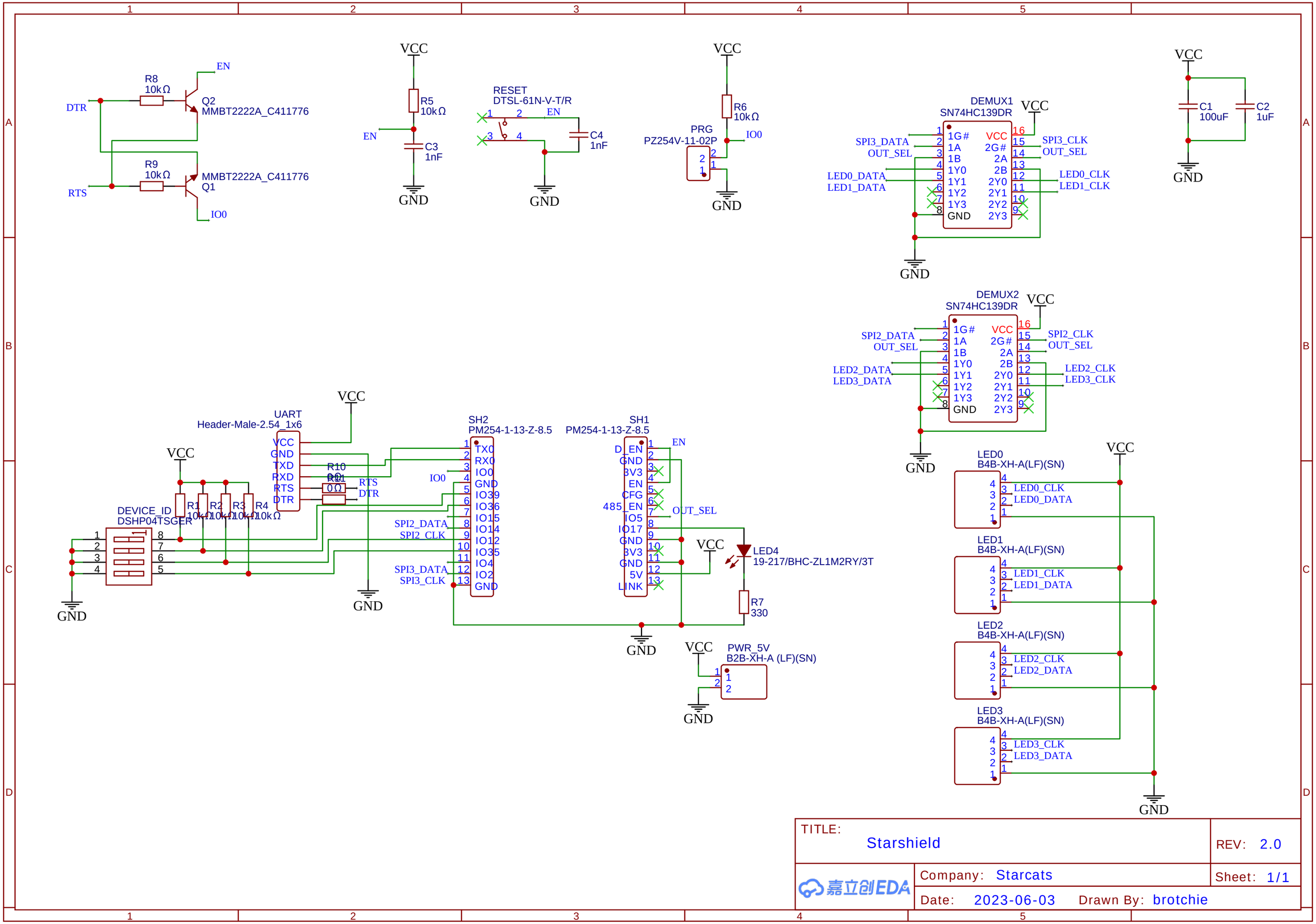

TITLE: Starshield	REV: 2.0
Company: Starcats	Sheet: 1/1
Date: 2023-06-03 Drawn By: brotchie	