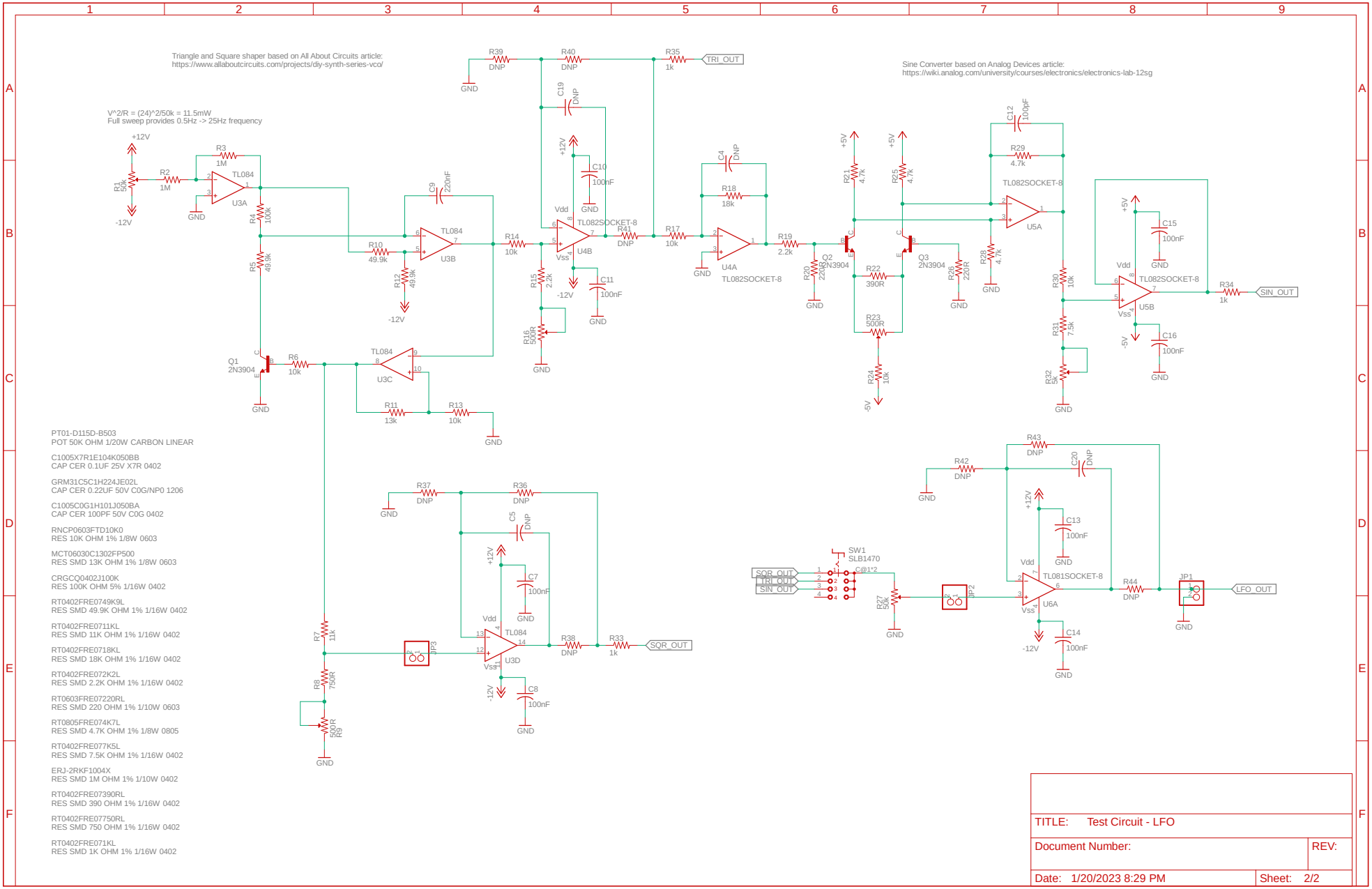

PT01-D115D-B503
POT 50K OHM 1/20W CARBON LINEAR

C1005X7R1E104K050BB
CAP CER 0.1UF 25V X7R 0402

GRM31C5C1H224JE02L
CAP CER 0.22UF 50V C0G/NP0 1206

C1005C0G1H101J050BA
CAP CER 100PF 50V C0G 0402

RNCP0603FTD10K0
RES 10K OHM 1% 1/8W 0603

MCT06030C1302FP500
RES SMD 13K OHM 1% 1/8W 0603

CRGCQ0402J100K
RES 100K OHM 5% 1/16W 0402

RT0402FRE0749K9L
RES SMD 49.9K OHM 1% 1/16W 0402

RT0402FRE0711KL
RES SMD 11K OHM 1% 1/16W 0402

RT0402FRE0718KL
RES SMD 18K OHM 1% 1/16W 0402

RT0402FRE072K2L
RES SMD 2.2K OHM 1% 1/16W 0402

RT0603FRE07220RL
RES SMD 220 OHM 1% 1/10W 0603

RT0805FRE074K7L
RES SMD 4.7K OHM 1% 1/8W 0805

RT0402FRE077K5L
RES SMD 7.5K OHM 1% 1/16W 0402

ERJ-2RKF1004X
RES SMD 1M OHM 1% 1/10W 0402

RT0402FRE07390RL
RES SMD 390 OHM 1% 1/16W 0402

RT0402FRE07750RL
RES SMD 750 OHM 1% 1/16W 0402

RT0402FRE071KL
RES SMD 1K OHM 1% 1/16W 0402

TITLE: Test Circuit - LFO	
Document Number:	REV:
Date: 1/20/2023 8:29 PM	Sheet: 2/2