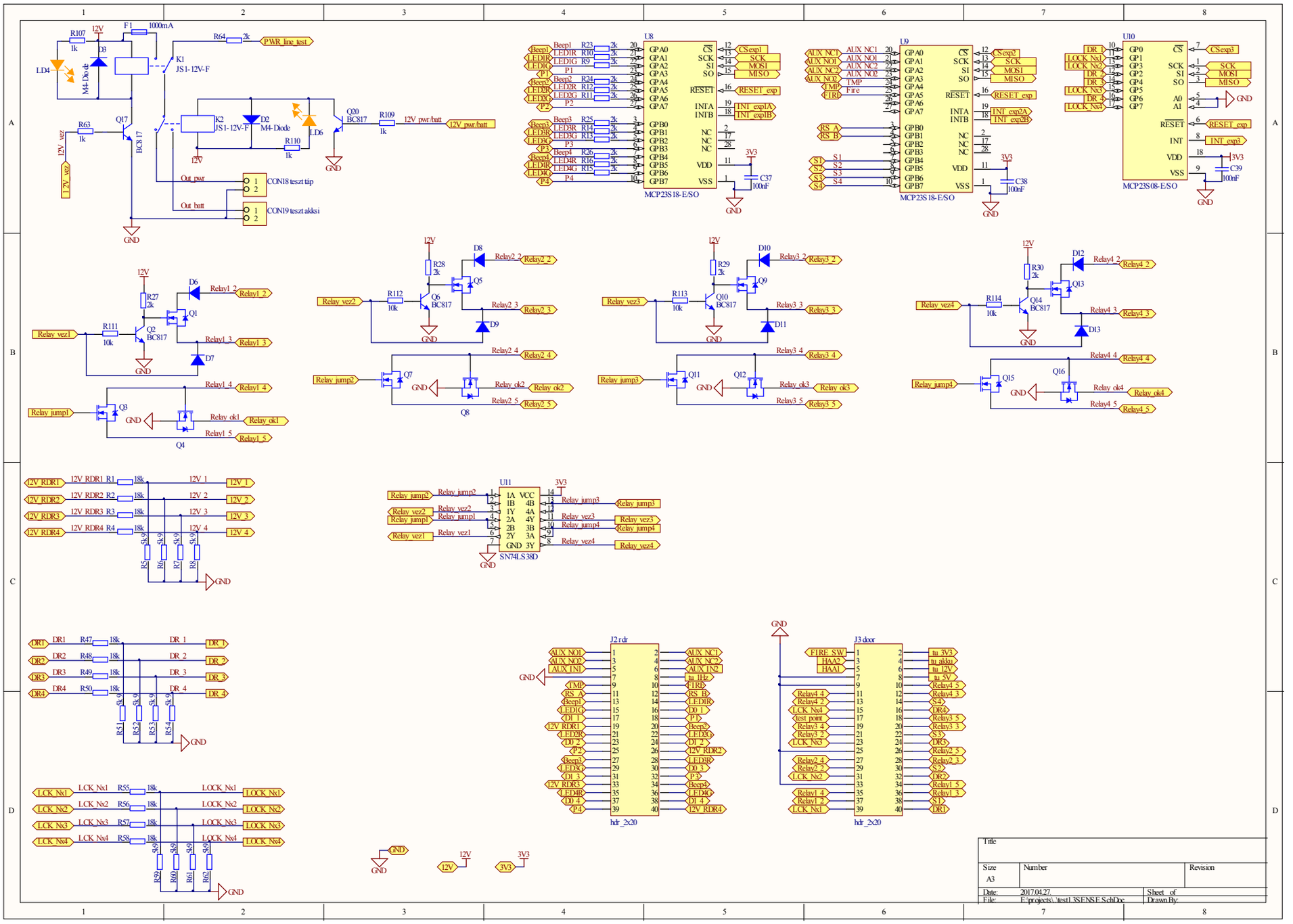
U8
MCP23S18-E/SO
U9
MCP23S18-E/SO
U10
MCP23S08-E/SO
U11
SN74LS38D
J2 rdr
hdr_2x20
J3 door
hdr_2x20
K1
JS1-12V-F
K2
JS1-12V-F
CON18 teszt táp
CON19 teszt akkusi
PWR_line_test
12V_pwr/batt
Title
Size
A3
Number
Revision
Date: 2017.04.27.
File: E:\projects_\test1_3SENSE.SchDoc
Sheet of
Drawn By:

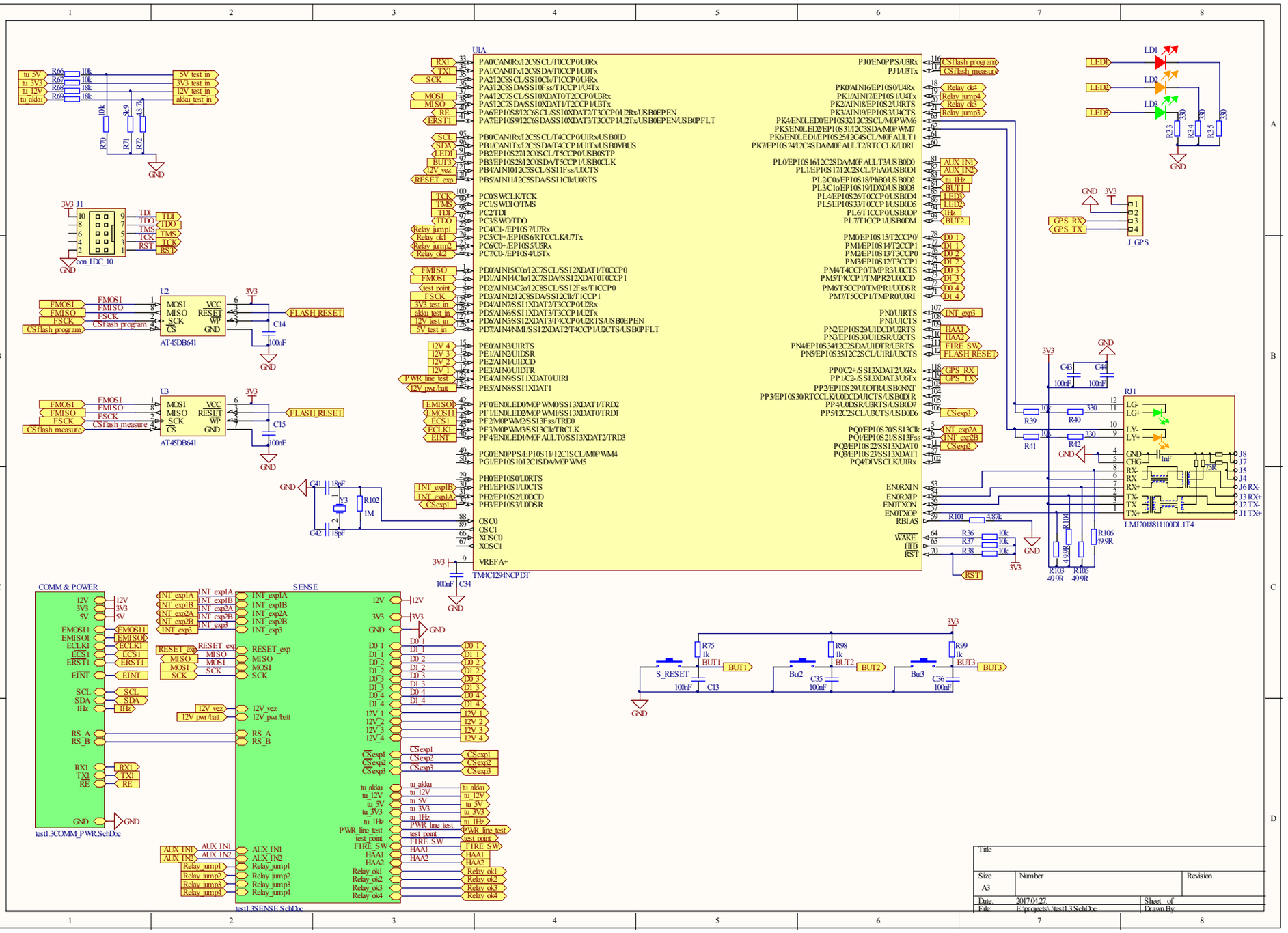
U1A
TM4C1294NCPDT
U2
AT45DB641
U3
AT45DB641
J1
con_IDC_10
J_GPS
RJ1
LMJ2018811100DL1T4
COMM & POWER
test1.3COMM_PWR.SchDoc
SENSE
test1.3SENSE.SchDoc
S_RESET
But2
But3
Title
Size
A3
Number
Revision
Date: 2017.04.27.
File: E:\projects\..\test1.3.SchDoc
Sheet of
Drawn By:

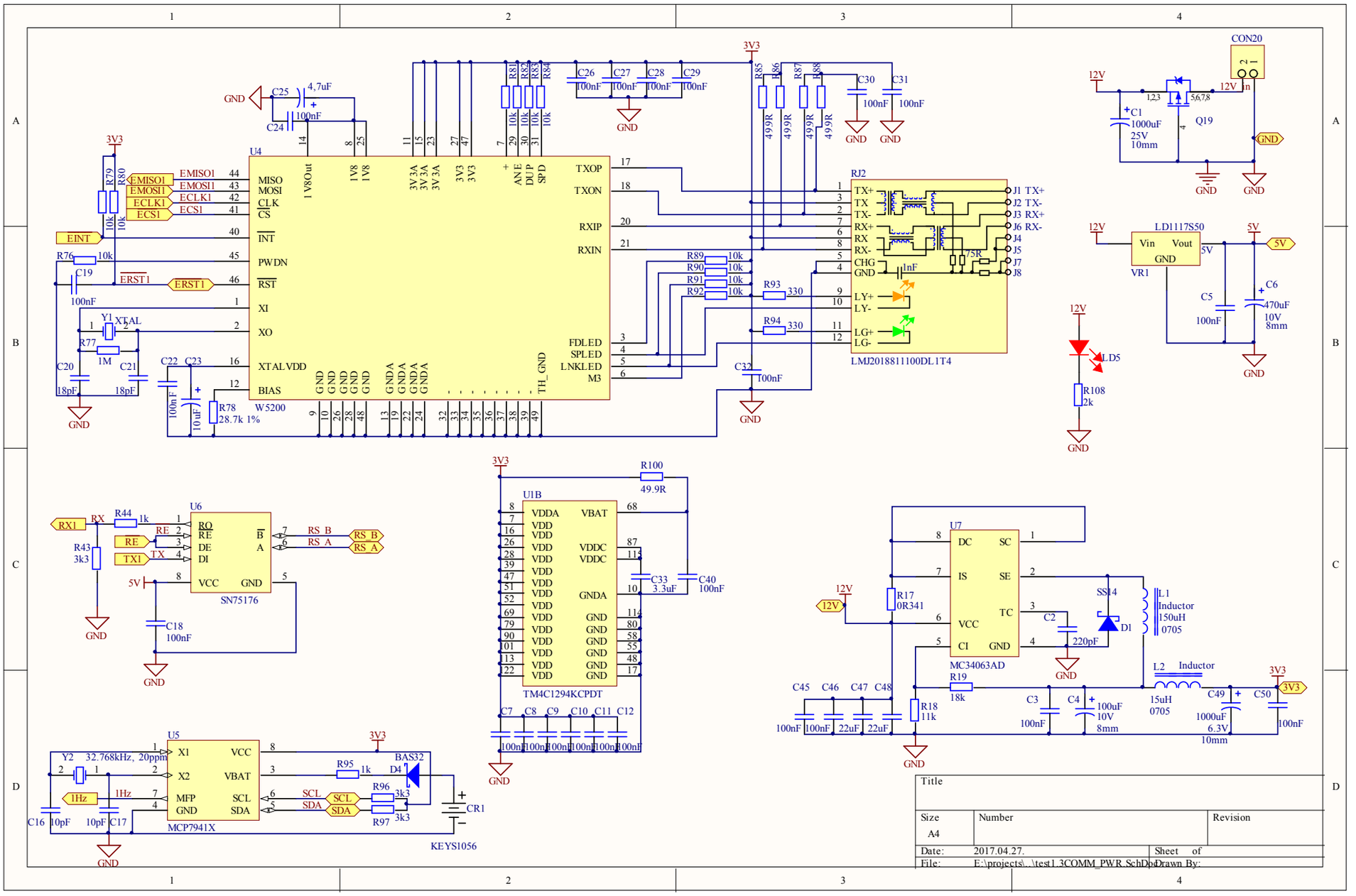
U4
W5200
MISO
MOSI
CLK
CS
INT
PWDN
RST
XI
XO
XTALVDD
BIAS
TXOP
TXON
RXIP
RXIN
FDLED
SPLED
LNKLED
M3
TH_GND
EMISO1
EMOSI1
ECLK1
ECS1
EINT
ERST1
RJ2
LMJ2018811100DL1T4
TX+
TX
TX-
RX+
RX
RX-
CHG
GND
LY+
LY-
LG+
LG-
J1 TX+
J2 TX-
J3 RX+
J6 RX-
J4
J5
J7
J8
CON20
Q19
C1
1000uF
25V
10mm
LD1117S50
Vin
Vout
GND
VR1
C5
100nF
C6
470uF
10V
8mm
LD5
R108
2k
U6
SN75176
RO
RE
DE
DI
VCC
GND
B
A
RS_B
RS_A
RX1
TX1
RX
TX
R43
3k3
R44
1k
C18
100nF
U1B
TM4C1294KCPDT
VDDA
VBAT
VDD
VDDC
GNDA
R100
49.9R
C33
3.3uF
C40
100nF
U7
MC34063AD
DC
SC
IS
SE
TC
VCC
CI
GND
R17
0R341
R19
18k
R18
11k
C2
220pF
SS14
D1
L1
Inductor
150uH
0705
L2
Inductor
15uH
0705
C49
1000uF
6.3V
10mm
C50
100nF
C3
100nF
C4
100uF
10V
8mm
U5
MCP7941X
X1
X2
MFP
VCC
VBAT
SCL
SDA
Y2
32.768kHz, 20ppm
1Hz
C16
10pF
C17
10pF
R95
1k
R96
3k3
R97
3k3
D4
BAS32
CR1
KEYS1056
Title
Size
A4
Number
Revision
Date:
2017.04.27.
Sheet of
File:
E:\projects\...\test1_3COMM_PWR.SchDoc
Drawn By:

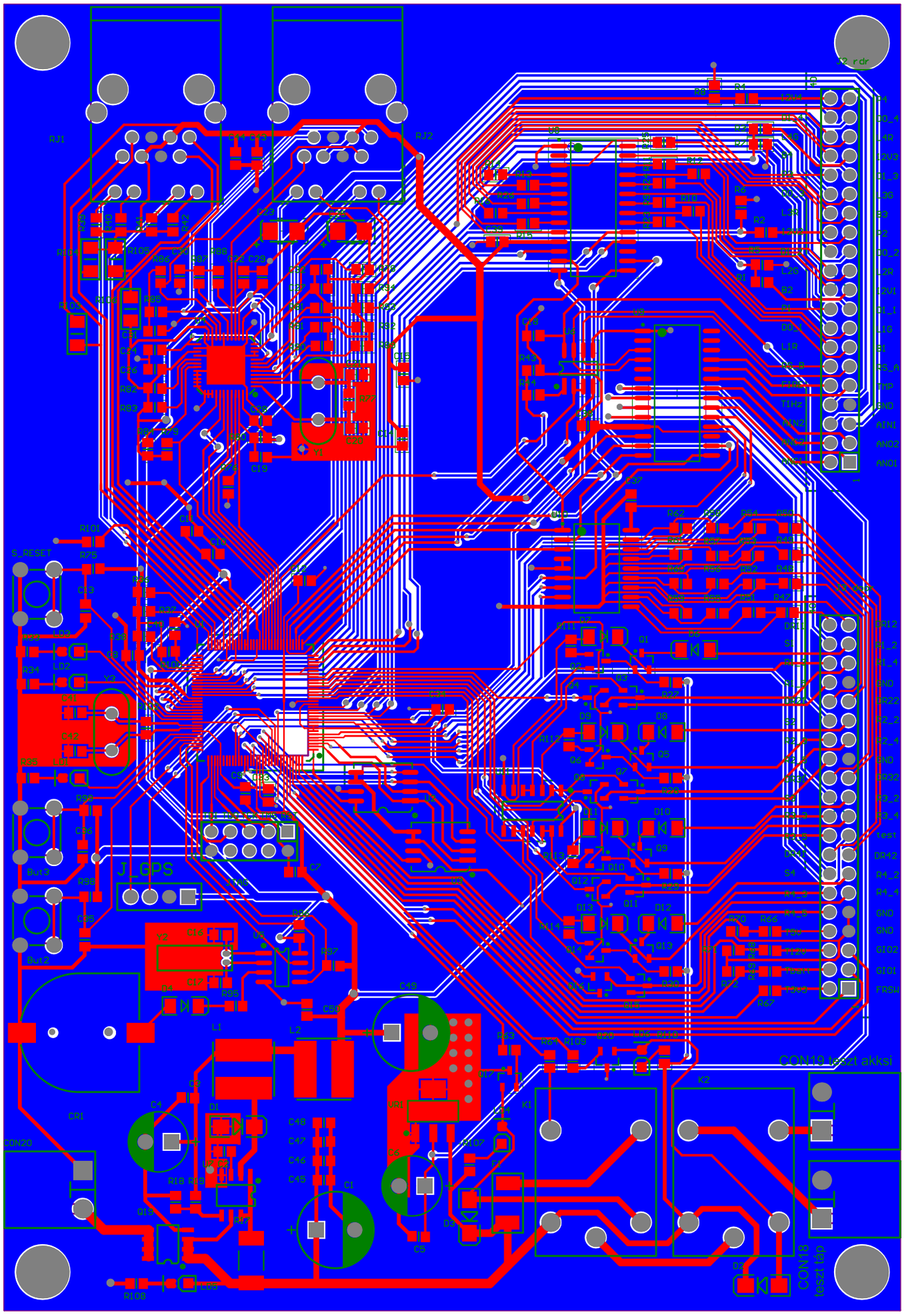
J GPS
CON19 kaest akksi
CON19
CON20