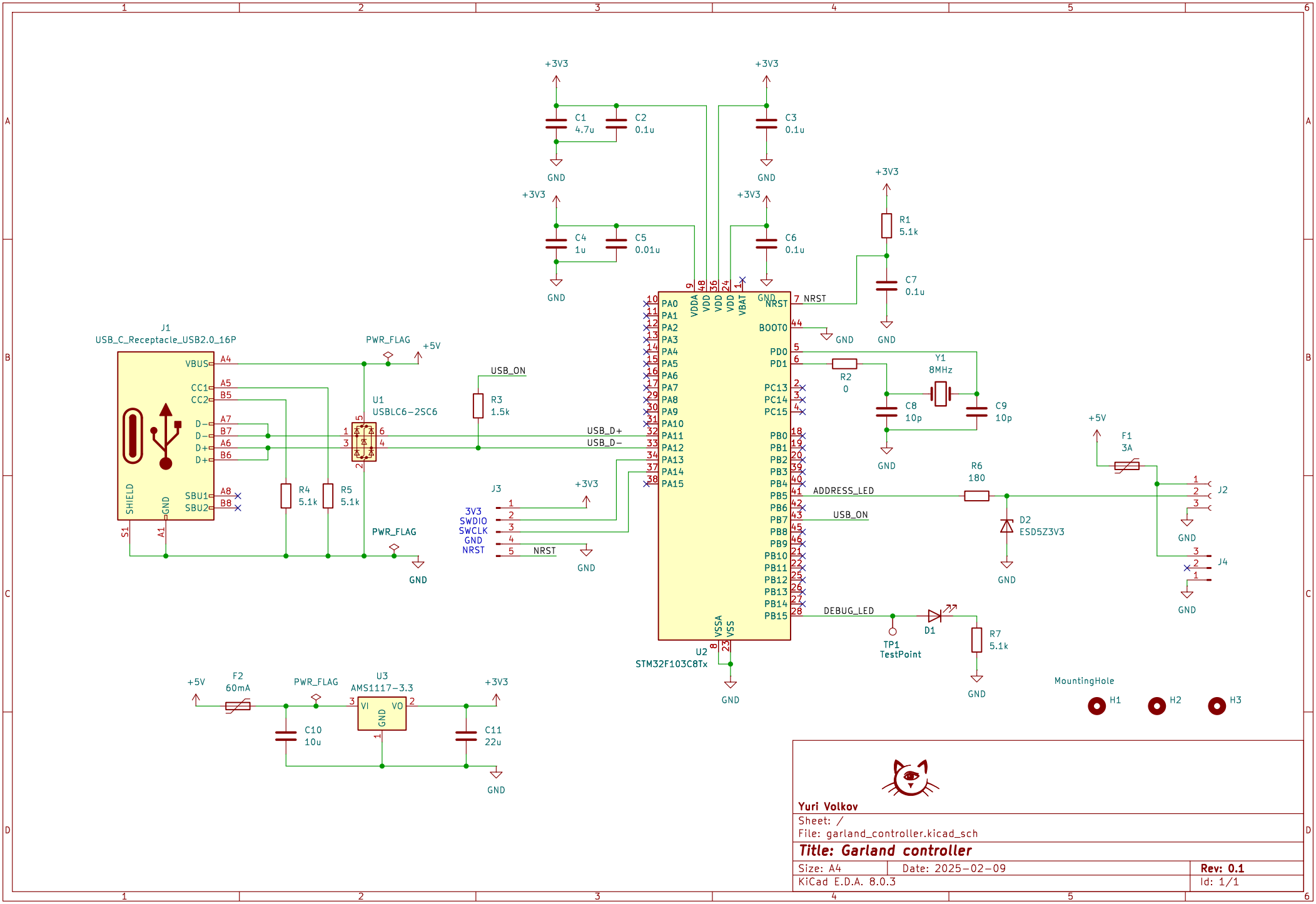

Yuri Volkov

Sheet: /

File: garland_controller.kicad_sch

Title: Garland controller

Size: A4	Date: 2025−02−09	Rev: 0.1
KiCad E.D.A. 8.0.3		Id: 1/1