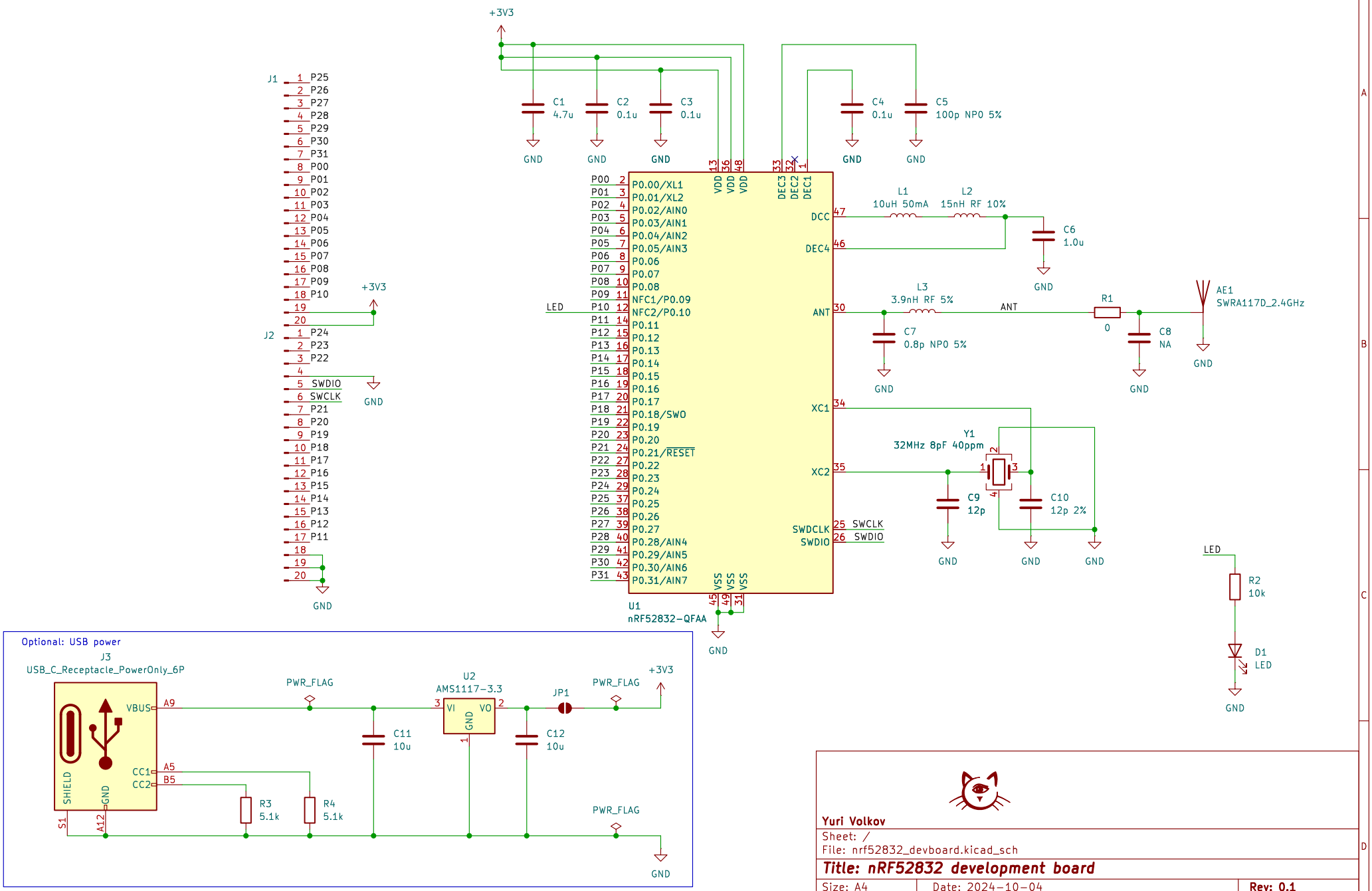
+3V3
C1 4.7u
C2 0.1u
C3 0.1u
C4 0.1u
C5 100p NP0 5%
GND
J1
J2
P25
P26
P27
P28
P29
P30
P31
P00
P01
P02
P03
P04
P05
P06
P07
P08
P09
P10
P11
P12
P13
P14
P15
P16
P17
P18
P19
P20
P21
P22
P23
P24
SWDIO
SWCLK
LED
U1
nRF52832-QFAA
P0.00/XL1
P0.01/XL2
P0.02/AIN0
P0.03/AIN1
P0.04/AIN2
P0.05/AIN3
P0.06
P0.07
P0.08
NFC1/P0.09
NFC2/P0.10
P0.11
P0.12
P0.13
P0.14
P0.15
P0.16
P0.17
P0.18/SWO
P0.19
P0.20
P0.21/RESET
P0.22
P0.23
P0.24
P0.25
P0.26
P0.27
P0.28/AIN4
P0.29/AIN5
P0.30/AIN6
P0.31/AIN7
VDD
VSS
DEC3
DEC2
DEC1
DCC
DEC4
ANT
XC1
XC2
SWDCLK
SWDIO
L1 10uH 50mA
L2 15nH RF 10%
C6 1.0u
L3 3.9nH RF 5%
C7 0.8p NP0 5%
R1 0
C8 NA
AE1 SWRA117D_2.4GHz
Y1 32MHz 8pF 40ppm
C9 12p
C10 12p 2%
R2 10k
D1 LED
Optional: USB power
J3 USB_C_Receptacle_PowerOnly_6P
VBUS
A9
CC1
CC2
A5
B5
SHIELD
S1
A12
R3 5.1k
R4 5.1k
PWR_FLAG
U2 AMS1117-3.3
VI
VO
C11 10u
C12 10u
JP1
Yuri Volkov
Sheet: /
File: nrf52832_devboard.kicad_sch
Title: nRF52832 development board
Size: A4
Date: 2024-10-04
Rev: 0.1
KiCad E.D.A. 8.0.3
Id: 1/1