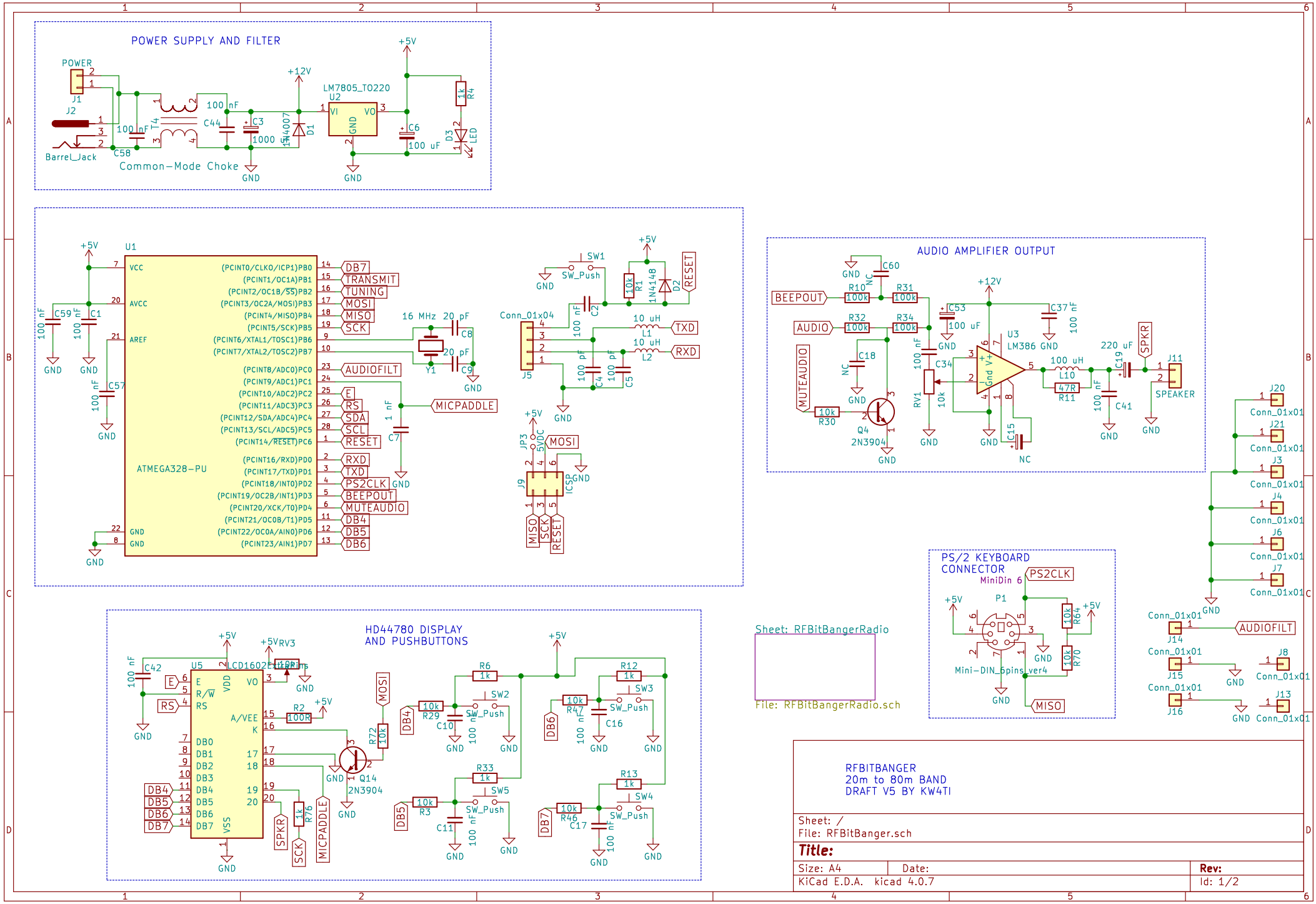
POWER SUPPLY AND FILTER
POWER
J1
J2
Barrel_Jack
C58
100 nF
T4
Common-Mode Choke
C44
100 nF
C3
1000
GND
+12V
1N4007
D1
LM7805_TO220
U2
VI
VO
GND
+5V
C6
100 uF
D3
LED
R4
1k
U1
ATMEGA328-PU
VCC
AVCC
AREF
GND
(PCINT0/CLKO/ICP1)PB0
(PCINT1/OC1A)PB1
(PCINT2/OC1B/SS)PB2
(PCINT3/OC2A/MOSI)PB3
(PCINT4/MISO)PB4
(PCINT5/SCK)PB5
(PCINT6/XTAL1/TOSC1)PB6
(PCINT7/XTAL2/TOSC2)PB7
(PCINT8/ADC0)PC0
(PCINT9/ADC1)PC1
(PCINT10/ADC2)PC2
(PCINT11/ADC3)PC3
(PCINT12/SDA/ADC4)PC4
(PCINT13/SCL/ADC5)PC5
(PCINT14/RESET)PC6
(PCINT16/RXD)PD0
(PCINT17/TXD)PD1
(PCINT18/INT0)PD2
(PCINT19/OC2B/INT1)PD3
(PCINT20/XCK/T0)PD4
(PCINT21/OC0B/T1)PD5
(PCINT22/OC0A/AIN0)PD6
(PCINT23/AIN1)PD7
DB7
TRANSMIT
TUNING
MOSI
MISO
SCK
AUDIOFILT
E
RS
SDA
SCL
RESET
RXD
TXD
PS2CLK
BEEPOUT
MUTEAUDIO
DB4
DB5
DB6
MICPADDLE
16 MHz
20 pF
C8
C9
Y1
C57
C59
C1
C7
1 nF
SW1
SW_Push
R1
10k
1N4148
D2
Conn_01x04
J5
C2
C4
C5
L1
L2
10 uH
JP3
5VDC
J9
ICSP
AUDIO AMPLIFIER OUTPUT
BEEPOUT
AUDIO
MUTEAUDIO
R10
R31
R32
R34
100k
C60
C53
100 uF
C37
C34
C18
R30
10k
Q4
2N3904
RV1
U3
LM386
Gnd
V+
C15
NC
L10
47R
R11
C19
220 uF
C41
SPKR
J11
SPEAKER
J20
J21
J3
J4
J6
J7
J14
J15
J16
J8
J13
Conn_01x01
AUDIOFILT
PS/2 KEYBOARD CONNECTOR
MiniDin 6
P1
PS2CLK
MISO
R64
R70
Mini-DIN_6pins_ver4
HD44780 DISPLAY AND PUSHBUTTONS
U5
LCD1602E
VDD
VO
VSS
A/VEE
K
DB0
DB1
DB2
DB3
DB4
DB5
DB6
DB7
RV3
R2
100k
R72
Q14
2N3904
R76
1k
SPKR
SCK
MICPADDLE
R6
R12
R33
R13
R29
R47
R3
R46
SW2
SW3
SW5
SW4
C10
C16
C11
C17
Sheet: RFBitBangerRadio
File: RFBitBangerRadio.sch
RFBITBANGER
20m to 80m BAND
DRAFT V5 BY KW4TI
Sheet: /
File: RFBitBanger.sch
Title:
Size: A4
Date:
Rev:
KiCad E.D.A. kicad 4.0.7
Id: 1/2

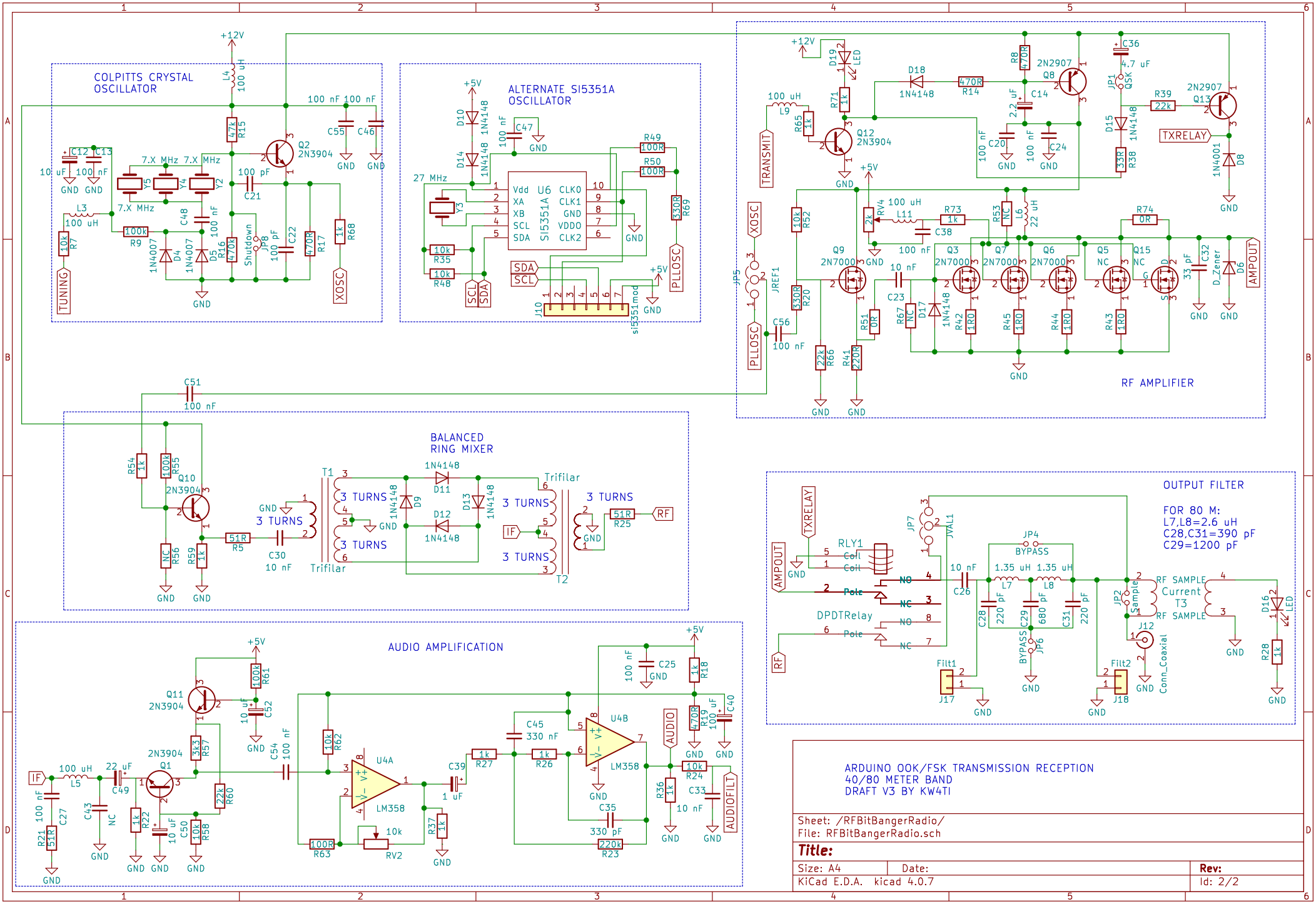
COLPITTS CRYSTAL OSCILLATOR
ALTERNATE SI5351A OSCILLATOR
RF AMPLIFIER
BALANCED RING MIXER
OUTPUT FILTER
FOR 80 M:
L7,L8=2.6 uH
C28,C31=390 pF
C29=1200 pF
AUDIO AMPLIFICATION
ARDUINO OOK/FSK TRANSMISSION RECEPTION
40/80 METER BAND
DRAFT V3 BY KW4TI
Sheet: /RFBitBangerRadio/
File: RFBitBangerRadio.sch
Title:
Size: A4
Date:
Rev:
KiCad E.D.A. kicad 4.0.7
Id: 2/2