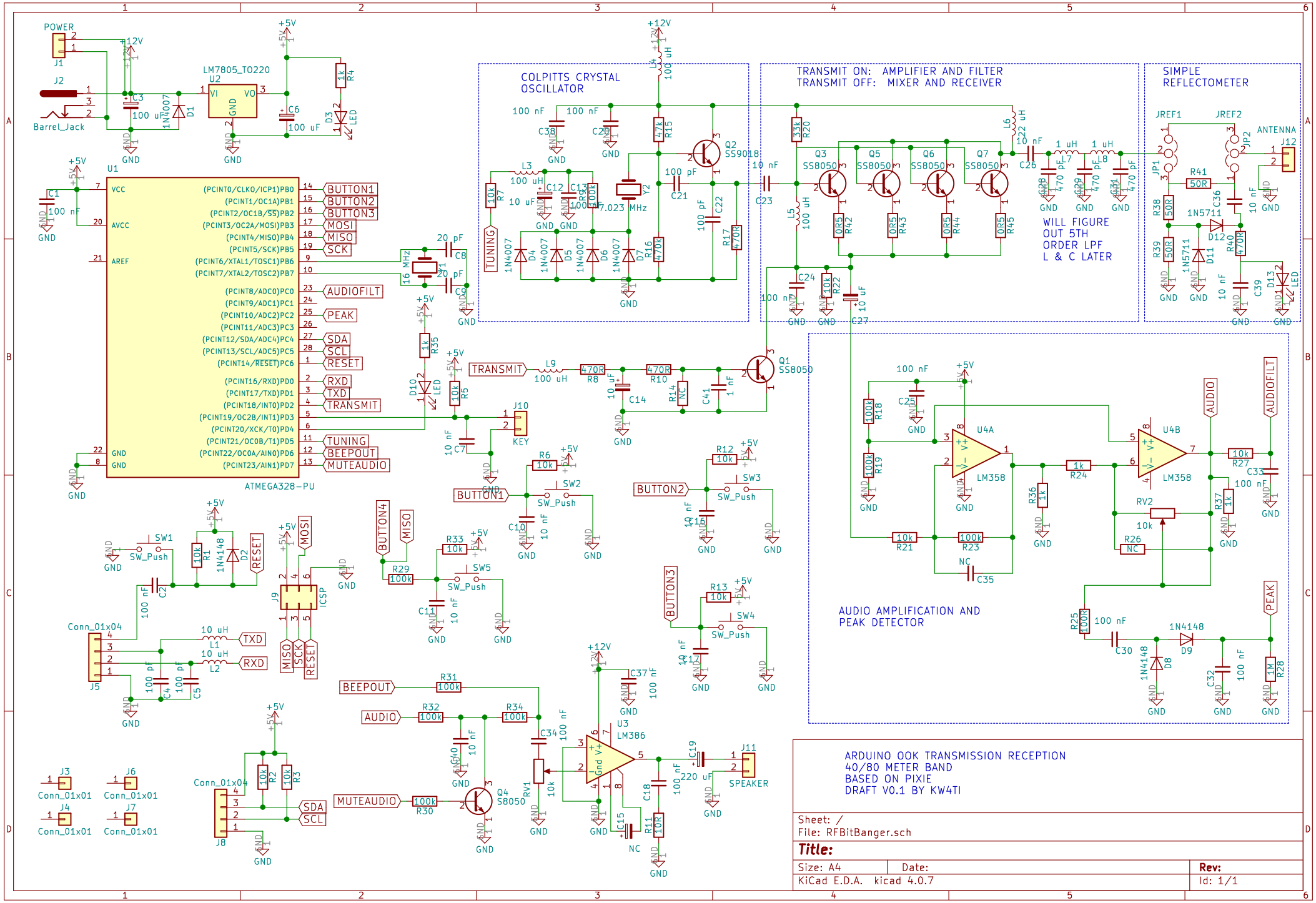
POWER
J1
J2
Barrel_Jack
LM7805_TO220
U2
VI
VO
GND
C3
100 uF
1N4007
D1
C6
100 uF
R4
1k
D3
LED
+5V
+12V
U1
ATMEGA328-PU
VCC
AVCC
AREF
GND
C1
100 nF
(PCINT0/CLKO/ICP1)PB0
(PCINT1/OC1A)PB1
(PCINT2/OC1B/SS)PB2
(PCINT3/OC2A/MOSI)PB3
(PCINT4/MISO)PB4
(PCINT5/SCK)PB5
(PCINT6/XTAL1/TOSC1)PB6
(PCINT7/XTAL2/TOSC2)PB7
(PCINT8/ADC0)PC0
(PCINT9/ADC1)PC1
(PCINT10/ADC2)PC2
(PCINT11/ADC3)PC3
(PCINT12/SDA/ADC4)PC4
(PCINT13/SCL/ADC5)PC5
(PCINT14/RESET)PC6
(PCINT16/RXD)PD0
(PCINT17/TXD)PD1
(PCINT18/INT0)PD2
(PCINT19/OC2B/INT1)PD3
(PCINT20/XCK/T0)PD4
(PCINT21/OC0B/T1)PD5
(PCINT22/OC0A/AIN0)PD6
(PCINT23/AIN1)PD7
BUTTON1
BUTTON2
BUTTON3
MOSI
MISO
SCK
AUDIOFILT
PEAK
SDA
SCL
RESET
RXD
TXD
TRANSMIT
TUNING
BEEPOUT
MUTEAUDIO
AUDIO
BUTTON4
20 pF
C8
C9
Y1
16 MHz
R35
1k
D10
LED
R5
10k
10 nF
C7
J10
KEY
COLPITTS CRYSTAL
OSCILLATOR
L4
100 uH
100 nF
C32
C25
47k
R15
Q2
SS9018
L3
100 uH
C12
C13
R9
100k
10 uF
R7
10k
Y2
7.023 MHz
100 pF
C21
C22
R17
470R
R16
470k
1N4007
D4
D5
D6
D7
TUNING
TRANSMIT ON: AMPLIFIER AND FILTER
TRANSMIT OFF: MIXER AND RECEIVER
33k
R20
L6
22 uH
10 nF
C23
L5
100 uH
Q3
Q5
Q6
Q7
SS8050
0R5
R42
R43
R44
R45
C26
1 uH
L7
L8
470 pF
C28
C29
C31
WILL FIGURE
OUT 5TH
ORDER LPF
L & C LATER
C24
R22
10k
C27
10 uF
SIMPLE
REFLECTOMETER
JREF1
JREF2
JP1
JP2
ANTENNA
J12
R41
50R
R38
R39
C36
1N5711
D12
D11
R40
470R
C39
D13
TRANSMIT
L9
470R
R8
R10
R14
NC
C14
C41
1 nF
Q1
SS8050
R6
R12
R33
R13
SW1
SW2
SW3
SW4
SW5
SW_Push
R1
1N4148
D2
J9
ICSP
Conn_01x04
J5
L1
L2
C4
C5
R29
C10
C11
C16
C17
R31
R32
R34
C34
C40
C37
U3
LM386
RV1
10k
C19
220 uF
J11
SPEAKER
C18
C15
R11
10R
Q4
S8050
R30
J8
R2
R3
J3
J4
J6
J7
Conn_01x01
U4A
U4B
LM358
R18
R19
R21
R23
R24
R36
R27
C33
RV2
R26
C35
R25
100R
C30
D8
D9
C32
R28
1M
AUDIO AMPLIFICATION AND
PEAK DETECTOR
ARDUINO OOK TRANSMISSION RECEPTION
40/80 METER BAND
BASED ON PIXIE
DRAFT V0.1 BY KW4TI
Sheet: /
File: RFBitBanger.sch
Title:
Size: A4
Date:
Rev:
KiCad E.D.A. kicad 4.0.7
Id: 1/1