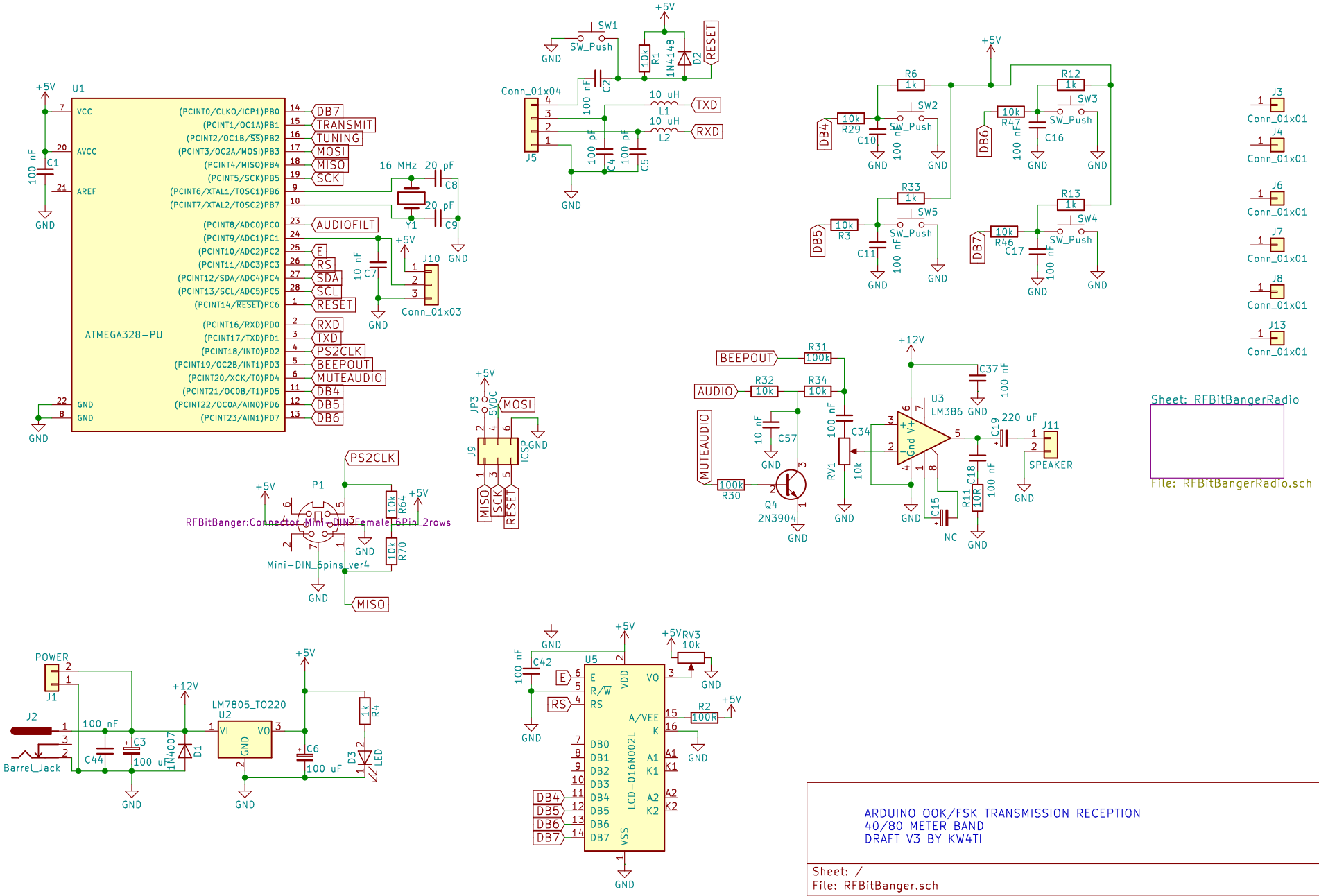

ARDUINO OOK/FSK TRANSMISSION RECEPTION
40/80 METER BAND
DRAFT V3 BY KW4TI

Sheet: /
File: RFBitBanger.sch

Title:

Size: A4	Date:	Rev:
KiCad E.D.A. kicad 4.0.7		Id: 1/2

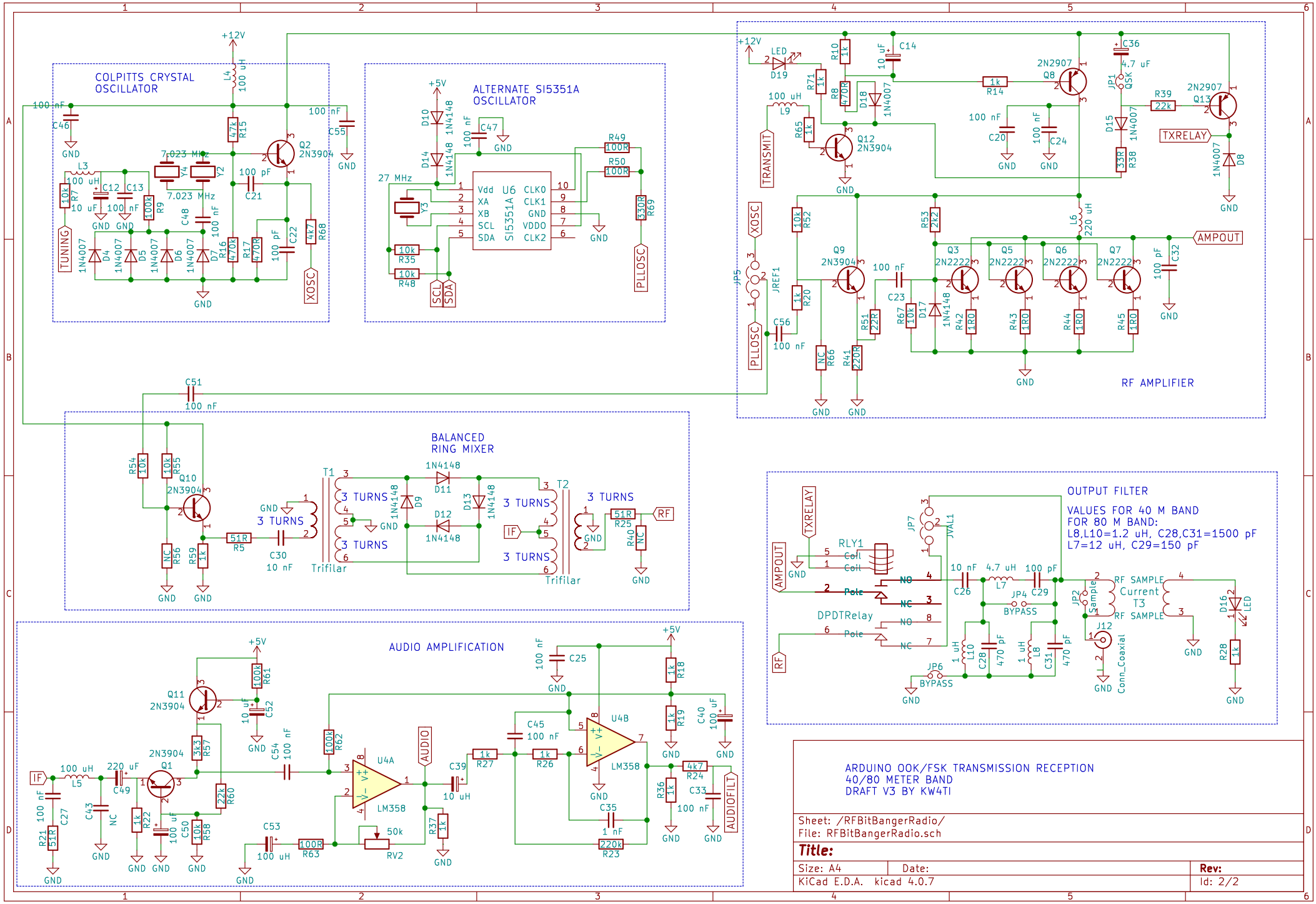
COLPITTS CRYSTAL OSCILLATOR
ALTERNATE SI5351A OSCILLATOR
RF AMPLIFIER
BALANCED RING MIXER
OUTPUT FILTER
VALUES FOR 40 M BAND
FOR 80 M BAND:
L8,L10=1.2 uH, C28,C31=1500 pF
L7=12 uH, C29=150 pF
AUDIO AMPLIFICATION
ARDUINO OOK/FSK TRANSMISSION RECEPTION
40/80 METER BAND
DRAFT V3 BY KW4TI
Sheet: /RFBitBangerRadio/
File: RFBitBangerRadio.sch
Title:
Size: A4
Date:
Rev:
KiCad E.D.A. kicad 4.0.7
Id: 2/2