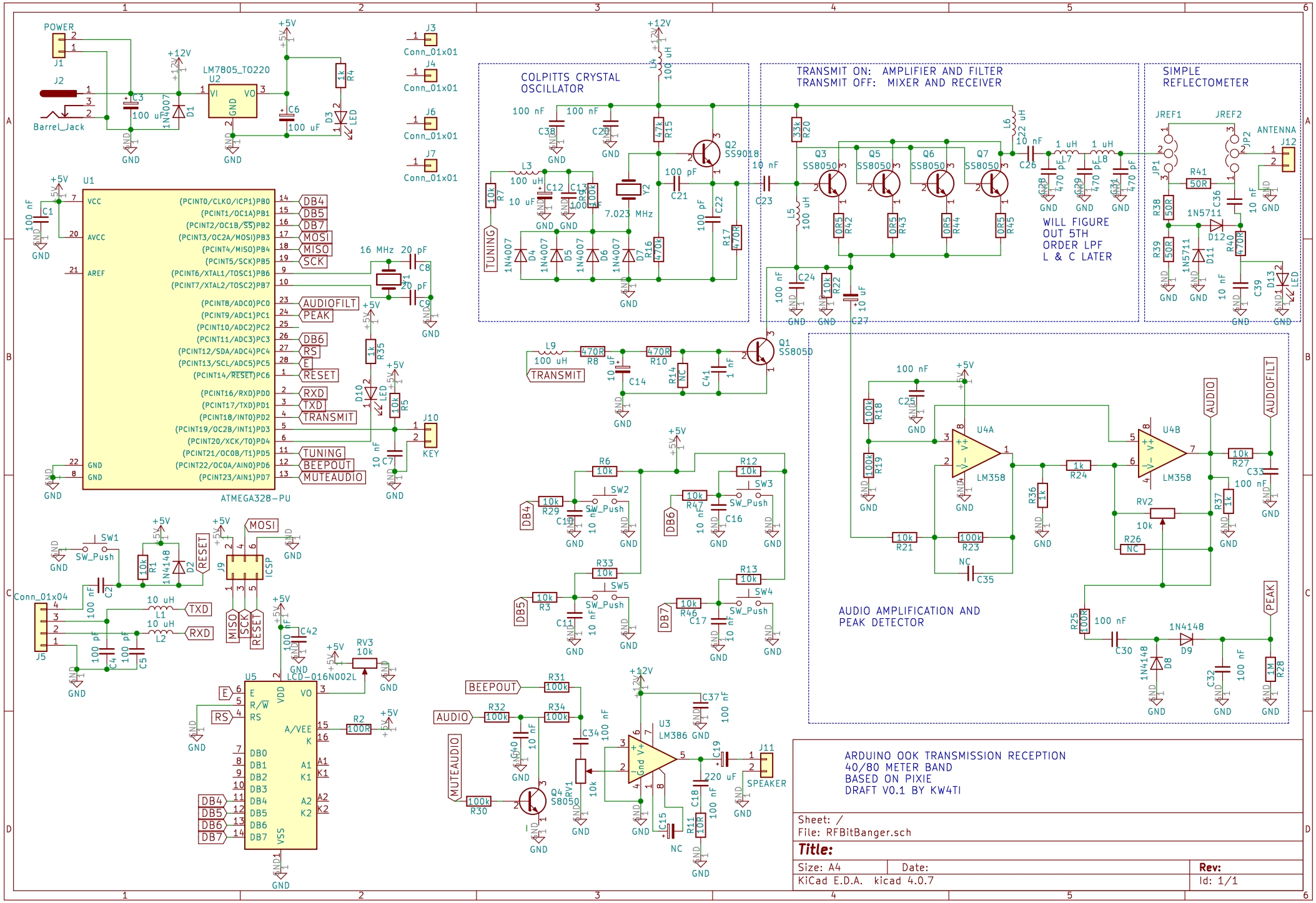
POWER
J1
J2
Barrel_Jack
LM7805_TO220
U2
VI
VO
GND
C3
100 uF
1N4007
D1
C6
100 uF
R4
1k
D3
LED
J3
Conn_01x01
J4
Conn_01x01
J6
Conn_01x01
J7
Conn_01x01
U1
VCC
AVCC
AREF
GND
GND
(PCINT0/CLKO/ICP1)PB0
(PCINT1/OC1A)PB1
(PCINT2/OC1B/SS)PB2
(PCINT3/OC2A/MOSI)PB3
(PCINT4/MISO)PB4
(PCINT5/SCK)PB5
(PCINT6/XTAL1/TOSC1)PB6
(PCINT7/XTAL2/TOSC2)PB7
(PCINT8/ADC0)PC0
(PCINT9/ADC1)PC1
(PCINT10/ADC2)PC2
(PCINT11/ADC3)PC3
(PCINT12/SDA/ADC4)PC4
(PCINT13/SCL/ADC5)PC5
(PCINT14/RESET)PC6
(PCINT16/RXD)PD0
(PCINT17/TXD)PD1
(PCINT18/INT0)PD2
(PCINT19/OC2B/INT1)PD3
(PCINT20/XCK/T0)PD4
(PCINT21/OC0B/T1)PD5
(PCINT22/OC0A/AIN0)PD6
(PCINT23/AIN1)PD7
DB4
DB5
DB7
MOSI
MISO
SCK
AUDIOFILT
PEAK
DB6
RS
E
RESET
RXD
TXD
TRANSMIT
TUNING
BEEPOUT
MUTEAUDIO
ATMEGA328-PU
16 MHz
C8
20 pF
C9
20 pF
R35
1k
D10
LED
R5
10k
J10
KEY
C7
10 nF
C1
100 nF
SW1
SW_Push
R1
10k
1N4148
D2
RESET
J9
ICSP
Conn_01x04
J5
C2
100 nF
L1
10 uF
L2
10 uF
TXD
RXD
C4
100 pF
C5
100 pF
C42
100 nF
RV3
10k
U5
LCD-016N002L
E
R/W
RS
VDD
VO
A/VEE
K
DB0
DB1
DB2
DB3
DB4
DB5
DB6
DB7
VSS
A1
K1
A2
K2
R2
100k
COLPITTS CRYSTAL OSCILLATOR
+12V
L4
100 uH
100 nF
C3
100 nF
C2
47k
R15
Q2
SS9018
L3
100 uH
C12
10 uF
C13
100 nF
R9
100k
Y2
7.023 MHz
100 pF
C21
100 pF
C22
R7
10k
TUNING
1N4007
D4
D5
D6
D7
R16
470k
R17
470R
TRANSMIT ON: AMPLIFIER AND FILTER
TRANSMIT OFF: MIXER AND RECEIVER
33k
R20
L6
22 uH
10 nF
C23
L5
100 uH
Q3
Q5
Q6
Q7
SS8050
0R5
R42
R43
R44
R45
C26
1 uH
L7
1 uH
L8
470 pF
C28
C29
C31
WILL FIGURE
OUT 5TH
ORDER LPF
L & C LATER
C24
100 nF
R22
10k
C27
10 uF
SIMPLE
REFLECTOMETER
JREF1
JREF2
JP1
JP2
ANTENNA
J12
R41
50R
R38
50R
R39
50R
C36
10 nF
1N5711
D12
D11
R40
470R
C39
10 nF
D13
LED
L9
100 uH
TRANSMIT
470R
R8
10 uF
C14
470R
R10
R14
NC
C41
1 nF
Q1
SS8050
R6
10k
R12
10k
DB4
R29
10k
SW2
SW_Push
C19
10 nF
DB6
R47
10k
SW3
C16
10 nF
R33
10k
DB5
R3
10k
SW5
C11
10 nF
R13
10k
DB7
R46
10k
SW4
C17
10 nF
BEEPOUT
R31
100k
AUDIO
R32
100k
R34
100k
C40
10 nF
C34
100 nF
MUTEAUDIO
R30
100k
Q4
S8050
RV1
10k
U3
LM386
Gnd
V+
C37
100 nF
C19
220 uF
J11
SPEAKER
C15
NC
R11
10R
C18
100 nF
AUDIO AMPLIFICATION AND
PEAK DETECTOR
100 nF
C2
R18
100k
R19
100k
U4A
LM358
R36
1k
R24
1k
U4B
LM358
AUDIO
AUDIOFILT
R27
10k
C33
100 nF
R37
1k
RV2
10k
R26
NC
R21
10k
R23
100k
NC
C35
R25
100R
100 nF
C30
1N4148
D9
1N4148
D8
C32
100 nF
R28
1M
PEAK
ARDUINO OOK TRANSMISSION RECEPTION
40/80 METER BAND
BASED ON PIXIE
DRAFT V0.1 BY KW4TI
Sheet: /
File: RFBitBanger.sch
Title:
Size: A4
Date:
Rev:
KiCad E.D.A. kicad 4.0.7
Id: 1/1