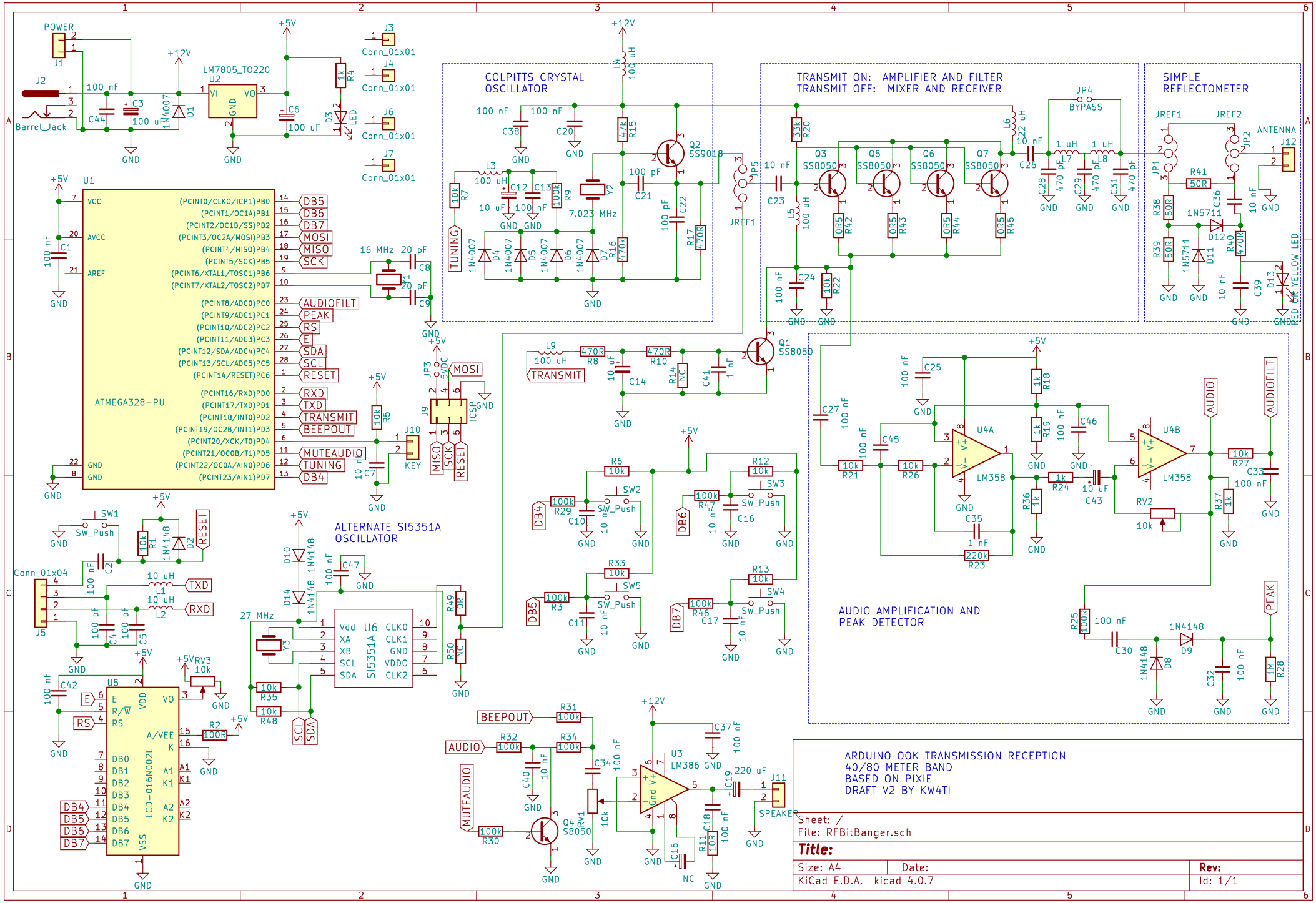
POWER
J1
J2
Barrel_Jack
100 nF
C44
C3
100 uF
1N4007
D1
+12V
LM7805_TO220
U2
VI
VO
GND
C6
100 uF
+5V
R4
1k
D3
LED
J3
Conn_01x01
J4
Conn_01x01
J6
Conn_01x01
J7
Conn_01x01
COLPITTS CRYSTAL OSCILLATOR
L4
100 uH
C38
C20
L3
C12
C13
R9
100k
R7
10k
TUNING
Y2
7.023 MHz
C21
C22
R15
47k
R16
470k
R17
470R
Q2
SS9018
D4
D5
D6
D7
JP5
JREF1
TRANSMIT ON: AMPLIFIER AND FILTER
TRANSMIT OFF: MIXER AND RECEIVER
R20
33k
L6
22 uH
C26
C23
L5
Q3
Q5
Q6
Q7
SS8050
R42
R43
R44
R45
0R5
C28
C29
C31
470 pF
L7
L8
1 uH
JP4
BYPASS
C24
R22
10k
SIMPLE REFLECTOMETER
JREF1
JREF2
JP1
JP2
ANTENNA
J12
R41
50R
R38
R39
C36
10 nF
1N5711
D12
D11
R40
470R
C39
D13
RED OK YELLOW LED
U1
ATMEGA328-PU
VCC
AVCC
AREF
GND
(PCINT0/CLKO/ICP1)PB0
(PCINT1/OC1A)PB1
(PCINT2/OC1B/SS)PB2
(PCINT3/OC2A/MOSI)PB3
(PCINT4/MISO)PB4
(PCINT5/SCK)PB5
(PCINT6/XTAL1/TOSC1)PB6
(PCINT7/XTAL2/TOSC2)PB7
(PCINT8/ADC0)PC0
(PCINT9/ADC1)PC1
(PCINT10/ADC2)PC2
(PCINT11/ADC3)PC3
(PCINT12/SDA/ADC4)PC4
(PCINT13/SCL/ADC5)PC5
(PCINT14/RESET)PC6
(PCINT16/RXD)PD0
(PCINT17/TXD)PD1
(PCINT18/INT0)PD2
(PCINT19/OC2B/INT1)PD3
(PCINT20/XCK/T0)PD4
(PCINT21/OC0B/T1)PD5
(PCINT22/OC0A/AIN0)PD6
(PCINT23/AIN1)PD7
DB5
DB6
DB7
MOSI
MISO
SCK
AUDIOFILT
PEAK
RS
E
SDA
SCL
RESET
RXD
TXD
TRANSMIT
BEEPOUT
MUTEAUDIO
TUNING
DB4
16 MHz
C8
C9
C1
100 nF
JP3
5VDC
J9
ICSP
J10
KEY
R5
10k
C7
10 nF
L9
100 uH
R8
470R
R10
470R
C14
10 uF
R14
NC
C41
1 nF
Q1
SS8050
SW1
SW_Push
R1
10k
D2
1N4148
Conn_01x04
J5
L1
10 uH
L2
10 uH
C2
100 nF
C4
100 pF
C5
100 pF
U5
LCD-016N002L
VDD
VO
E
R/W
RS
A/VEE
K
DB0
DB1
DB2
DB3
DB4
DB5
DB6
DB7
VSS
A1
K1
A2
K2
RV3
10k
R2
100R
C42
100 nF
ALTERNATE SI5351A OSCILLATOR
D10
D14
1N4148
C47
100 nF
27 MHz
Y3
U6
SI5351A
Vdd
XA
XB
SCL
SDA
CLK0
CLK1
GND
VDDO
CLK2
R49
0R
R50
NC
R35
10k
R48
10k
SCL
SDA
R6
10k
R29
100k
C10
10 nF
SW2
SW_Push
R12
10k
R47
100k
C16
10 nF
SW3
R33
10k
R3
100k
C11
10 nF
SW5
R13
10k
R46
100k
C17
10 nF
SW4
C25
100 nF
C27
100 nF
C45
100 nF
R21
10k
R26
10k
U4A
LM358
R18
1k
R19
1k
C46
100 nF
R36
1k
C35
1 nF
R23
220k
R24
1k
C43
10 uF
U4B
LM358
RV2
10k
R27
10k
C33
100 nF
R37
1k
AUDIO
AUDIOFILT
AUDIO AMPLIFICATION AND PEAK DETECTOR
R25
100R
C30
100 nF
1N4148
D8
D9
C32
100 nF
R28
1M
PEAK
BEEPOUT
R31
100k
AUDIO
R32
100k
R34
100k
C40
10 nF
C34
100 nF
MUTEAUDIO
R30
100k
Q4
S8050
RV1
10k
U3
LM386
Gnd
V+
C37
100 nF
C19
220 uF
J11
SPEAKER
C15
NC
R11
10R
C18
100 nF
ARDUINO OOK TRANSMISSION RECEPTION
40/80 METER BAND
BASED ON PIXIE
DRAFT V2 BY KW4TI
Sheet: /
File: RFBitBanger.sch
Title:
Size: A4
Date:
Rev:
KiCad E.D.A. kicad 4.0.7
Id: 1/1