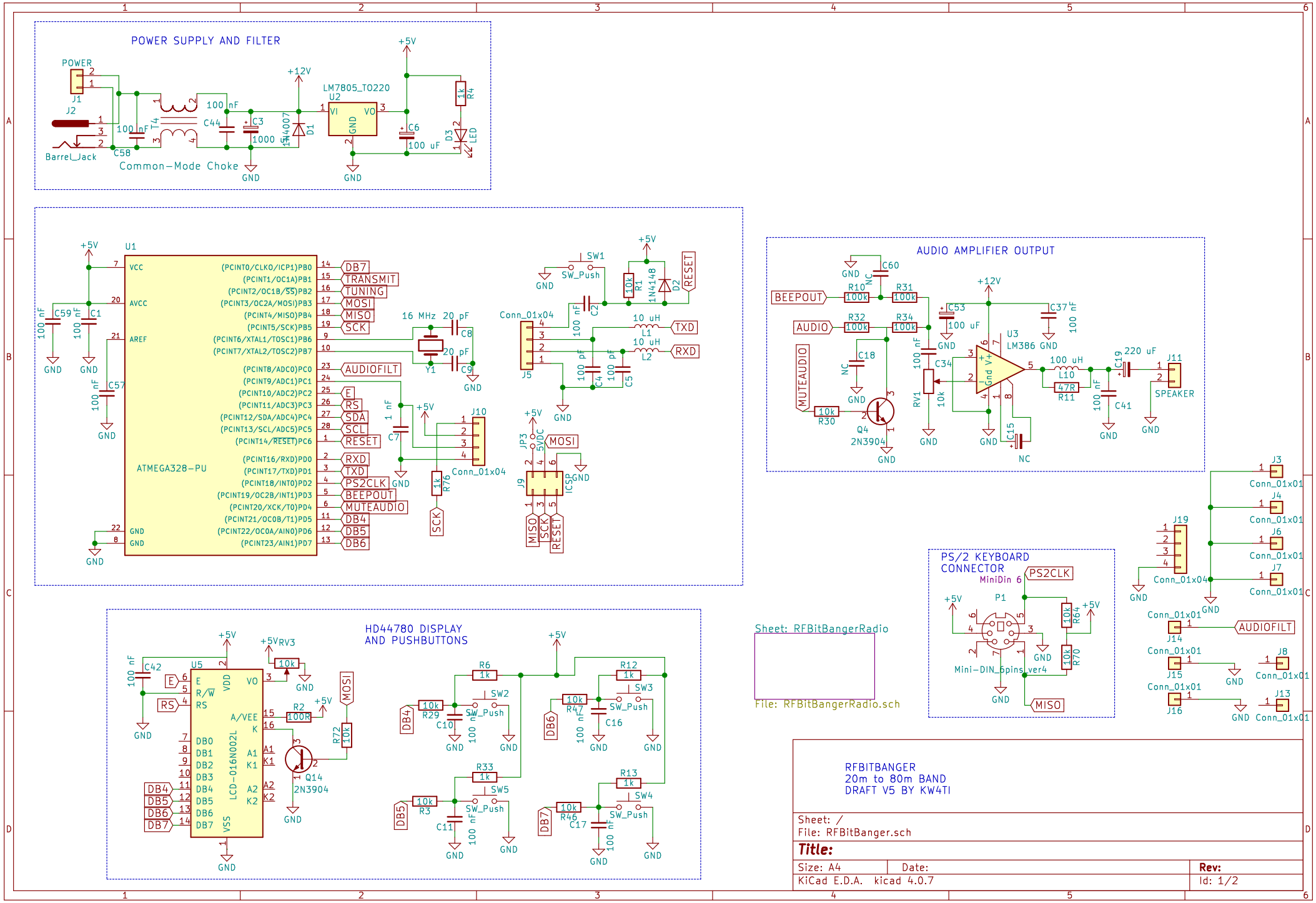
POWER SUPPLY AND FILTER
POWER
J1
J2
Barrel_Jack
C58
100 nF
T4
Common-Mode Choke
C44
100 nF
C3
1000
1N4007
D1
+12V
LM7805_TO220
U2
VI
VO
GND
C6
100 uF
+5V
R4
1k
D3
LED
GND
U1
ATMEGA328-PU
VCC
AVCC
AREF
GND
(PCINT0/CLKO/ICP1)PB0
(PCINT1/OC1A)PB1
(PCINT2/OC1B/SS)PB2
(PCINT3/OC2A/MOSI)PB3
(PCINT4/MISO)PB4
(PCINT5/SCK)PB5
(PCINT6/XTAL1/TOSC1)PB6
(PCINT7/XTAL2/TOSC2)PB7
(PCINT8/ADC0)PC0
(PCINT9/ADC1)PC1
(PCINT10/ADC2)PC2
(PCINT11/ADC3)PC3
(PCINT12/SDA/ADC4)PC4
(PCINT13/SCL/ADC5)PC5
(PCINT14/RESET)PC6
(PCINT16/RXD)PD0
(PCINT17/TXD)PD1
(PCINT18/INT0)PD2
(PCINT19/OC2B/INT1)PD3
(PCINT20/XCK/T0)PD4
(PCINT21/OC0B/T1)PD5
(PCINT22/OC0A/AIN0)PD6
(PCINT23/AIN1)PD7
DB7
TRANSMIT
TUNING
MOSI
MISO
SCK
AUDIOFILT
E
RS
SDA
SCL
RESET
RXD
TXD
PS2CLK
BEEPOUT
MUTEAUDIO
DB4
DB5
DB6
16 MHz
20 pF
C8
C9
Y1
C59
C1
C57
C7
1 nF
J10
Conn_01x04
R76
11k
SW1
SW_Push
R1
10k
1N4148
D2
C2
100 nF
J5
L1
10 uH
L2
C4
C5
100 pF
JP3
5VDC
J9
ICSP
AUDIO AMPLIFIER OUTPUT
BEEPOUT
AUDIO
MUTEAUDIO
R10
R31
R32
R34
100k
C60
C53
100 uF
C37
100 nF
U3
LM386
C18
C34
RV1
10k
R30
Q4
2N3904
C15
NC
L10
100 uH
R11
47R
C19
220 uF
J11
SPEAKER
C41
PS/2 KEYBOARD CONNECTOR
MiniDin 6
P1
Mini-DIN_6pins_ver4
R64
R70
J3
J4
J6
J7
J19
J14
J15
J16
J8
J13
AUDIOFILT
HD44780 DISPLAY AND PUSHBUTTONS
U5
LCD-016N002L
VDD
VO
A/VEE
VSS
RV3
R2
100K
Q14
2N3904
R72
R6
R12
R33
R13
R29
R3
R47
R46
SW2
SW3
SW4
SW5
C10
C11
C16
C17
Sheet: RFBitBangerRadio
File: RFBitBangerRadio.sch
RFBITBANGER
20m to 80m BAND
DRAFT V5 BY KW4TI
Sheet: /
File: RFBitBanger.sch
Title:
Size: A4
Date:
Rev:
KiCad E.D.A. kicad 4.0.7
Id: 1/2

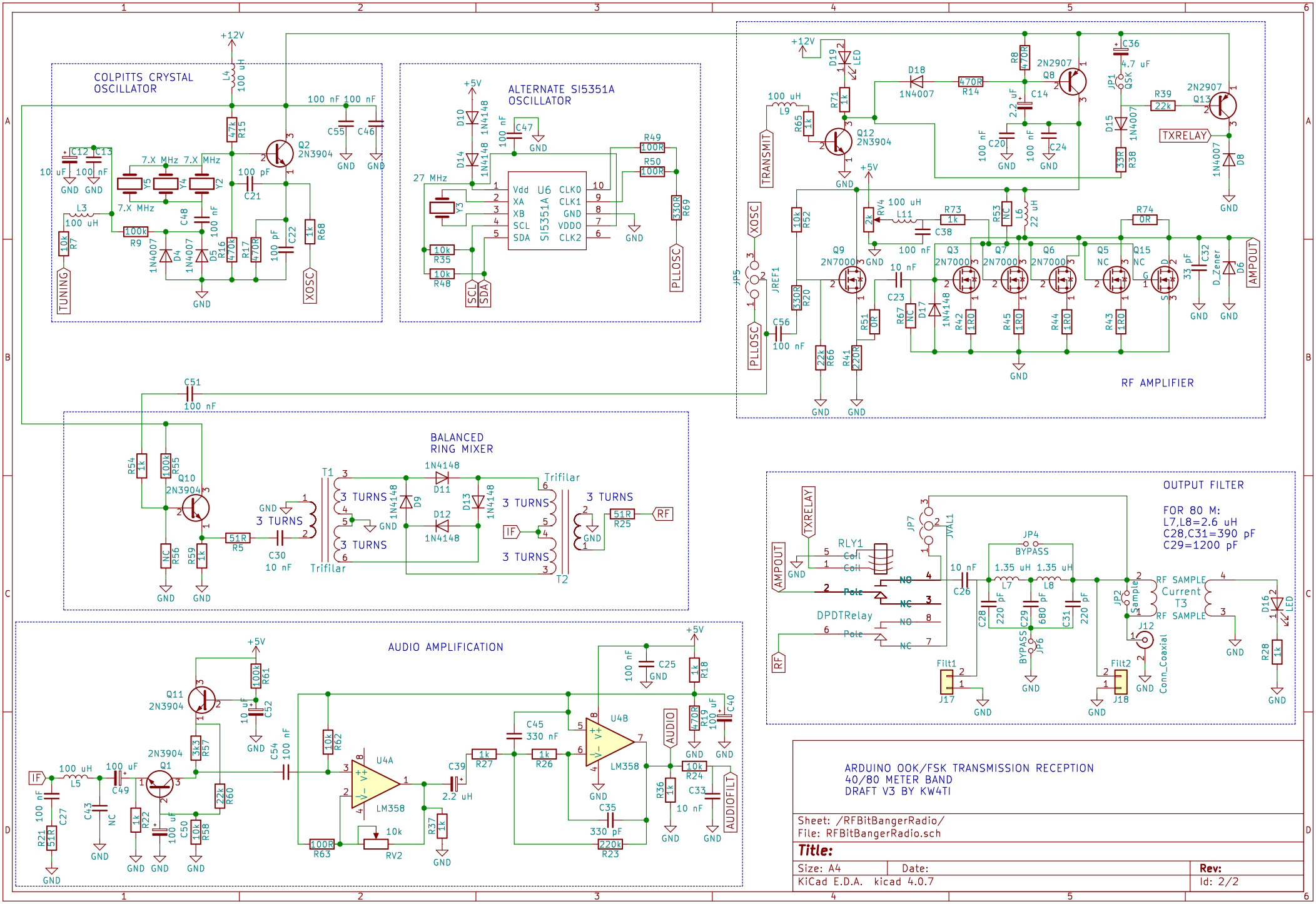
COLPITTS CRYSTAL OSCILLATOR
ALTERNATE SI5351A OSCILLATOR
RF AMPLIFIER
BALANCED RING MIXER
OUTPUT FILTER
FOR 80 M:
L7,L8=2.6 uH
C28,C31=390 pF
C29=1200 pF
AUDIO AMPLIFICATION
ARDUINO OOK/FSK TRANSMISSION RECEPTION
40/80 METER BAND
DRAFT V3 BY KW4TI
Sheet: /RFBitBangerRadio/
File: RFBitBangerRadio.sch
Title:
Size: A4
Date:
Rev:
KiCad E.D.A. kicad 4.0.7
Id: 2/2