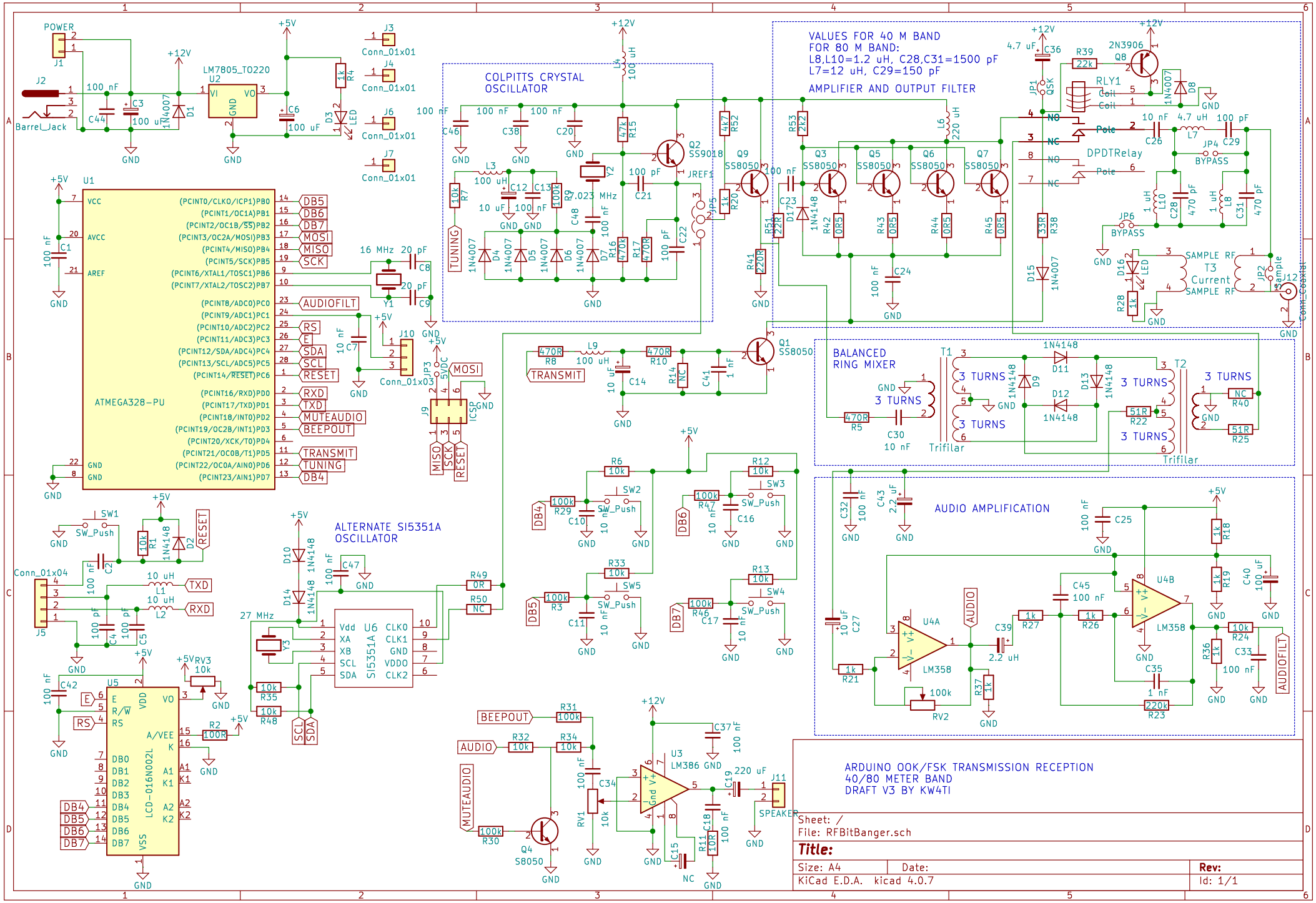
ARDUINO OOK/FSK TRANSMISSION RECEPTION
40/80 METER BAND
DRAFT V3 BY KW4TI
Sheet: /
File: RFBitBanger.sch
Title:
Size: A4
Date:
Rev:
KiCad E.D.A. kicad 4.0.7
Id: 1/1
COLPITTS CRYSTAL OSCILLATOR
VALUES FOR 40 M BAND
FOR 80 M BAND:
L8,L10=1.2 uH, C28,C31=1500 pF
L7=12 uH, C29=150 pF
AMPLIFIER AND OUTPUT FILTER
BALANCED RING MIXER
AUDIO AMPLIFICATION
ALTERNATE SI5351A OSCILLATOR
ATMEGA328-PU
LM7805_TO220
LCD-016N002L
SI5351A
LM386
LM358
DPDTRelay
RLY1
T3 Current
Trifilar
POWER
Barrel_Jack
TUNING
TRANSMIT
AUDIOFILT
SPEAKER