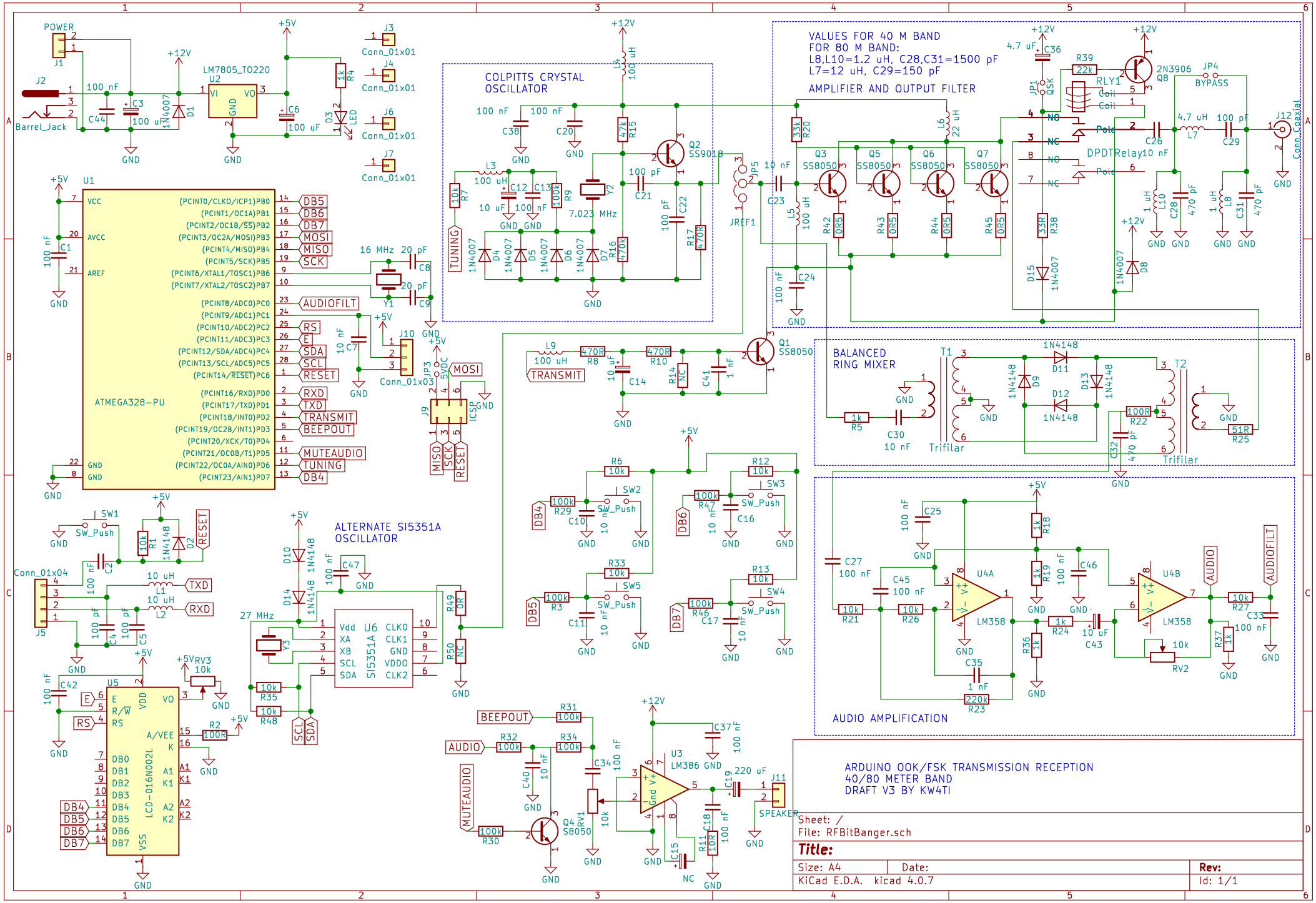
POWER
J1
J2
Barrel_Jack
LM7805_TO220
U2
VI
VO
GND
+5V
+12V
100 nF
C44
C3
100 uF
1N4007
D1
C6
R4
1k
D3
LED
J3
J4
J6
J7
Conn_01x01
COLPITTS CRYSTAL
OSCILLATOR
L4
100 uH
C38
C20
L3
C12
C13
R9
100k
R7
10k
TUNING
D4
D5
D6
D7
R16
470k
Y2
7.023 MHz
C21
C22
R17
470R
Q2
SS9018
JP5
JREF1
VALUES FOR 40 M BAND
FOR 80 M BAND:
L8,L10=1.2 uH, C28,C31=1500 pF
L7=12 uH, C29=150 pF
AMPLIFIER AND OUTPUT FILTER
C36
4.7 uF
R39
22k
2N3906
Q8
JP4
BYPASS
JP1
QSK
RLY1
Coil
Pole
NO
NC
DPDTRelay
C26
10 nF
L7
4.7 uH
C29
100 pF
J12
Conn_Coaxial
L6
22 uH
33k
R20
Q3
Q5
Q6
Q7
SS8050
R42
R43
R44
R45
0R5
R38
33R
D15
1N4007
D8
L10
1 uH
C28
470 pF
L8
C31
C23
L5
C24
U1
ATMEGA328-PU
VCC
AVCC
AREF
GND
(PCINT0/CLKO/ICP1)PB0
(PCINT1/OC1A)PB1
(PCINT2/OC1B/SS)PB2
(PCINT3/OC2A/MOSI)PB3
(PCINT4/MISO)PB4
(PCINT5/SCK)PB5
(PCINT6/XTAL1/TOSC1)PB6
(PCINT7/XTAL2/TOSC2)PB7
(PCINT8/ADC0)PC0
(PCINT9/ADC1)PC1
(PCINT10/ADC2)PC2
(PCINT11/ADC3)PC3
(PCINT12/SDA/ADC4)PC4
(PCINT13/SCL/ADC5)PC5
(PCINT14/RESET)PC6
(PCINT16/RXD)PD0
(PCINT17/TXD)PD1
(PCINT18/INT0)PD2
(PCINT19/OC2B/INT1)PD3
(PCINT20/XCK/T0)PD4
(PCINT21/OC0B/T1)PD5
(PCINT22/OC0A/AIN0)PD6
(PCINT23/AIN1)PD7
DB5
DB6
DB7
MOSI
MISO
SCK
AUDIOFILT
RS
E
SDA
SCL
RESET
RXD
TXD
TRANSMIT
BEEPOUT
MUTEAUDIO
TUNING
DB4
C1
16 MHz
Y1
20 pF
C8
C9
C7
10 nF
J10
Conn_01x03
J3
5VDC
J9
ICSP
L9
100 uH
R8
470R
R10
C14
R14
NC
C41
1 nF
Q1
SS8050
BALANCED
RING MIXER
T1
T2
Trifilar
1N4148
D9
D11
D12
D13
R5
1k
C30
10 nF
R22
100R
R25
51R
C32
470 pF
SW1
SW_Push
R1
10k
D2
Conn_01x04
J5
L1
L2
10 uH
C2
C4
C5
100 pF
U5
LCD-016N002L
VDD
VO
A/VEE
K
A1
K1
A2
K2
VSS
RV3
10k
R2
100R
C42
ALTERNATE SI5351A
OSCILLATOR
D10
D14
C47
27 MHz
Y3
U6
SI5351A
Vdd
XA
XB
SCL
SDA
CLK0
CLK1
GND
VDDO
CLK2
R49
0R
R50
NC
R35
R48
R6
R12
R29
R47
R33
R13
R3
R46
C10
C16
C11
C17
SW2
SW3
SW5
SW4
R31
100k
R32
R34
C40
C34
RV1
Q4
S8050
R30
U3
LM386
C37
C19
220 uF
J11
SPEAKER
C15
R11
10R
C18
AUDIO AMPLIFICATION
U4A
U4B
LM358
C25
C27
100 nF
C45
R21
R26
R18
R19
C46
R24
C43
10 uF
R36
C35
1 nF
R23
220k
RV2
R27
C33
R37
ARDUINO OOK/FSK TRANSMISSION RECEPTION
40/80 METER BAND
DRAFT V3 BY KW4TI
Sheet: /
File: RFBitBanger.sch
Title:
Size: A4
Date:
Rev:
KiCad E.D.A. kicad 4.0.7
Id: 1/1