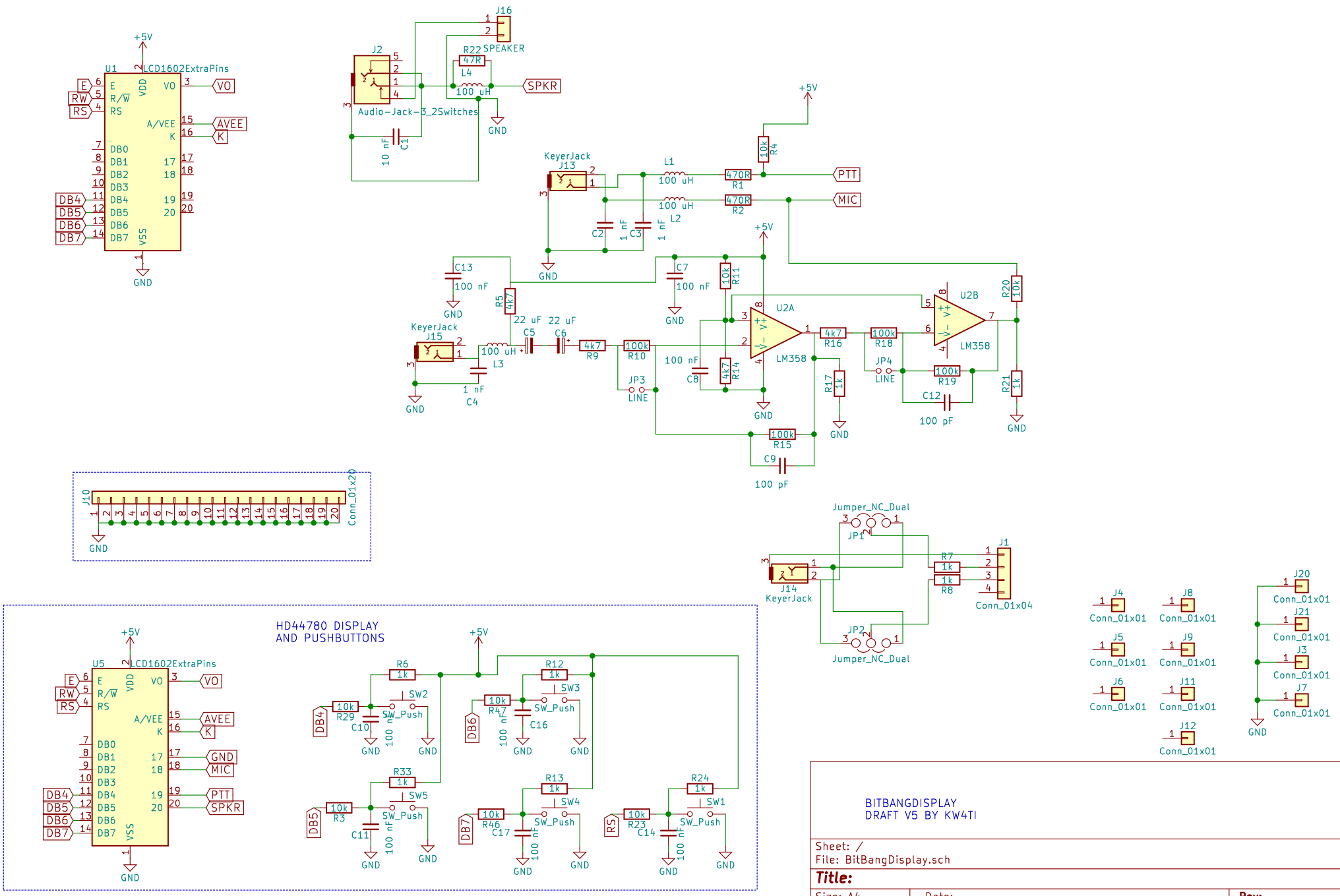
U1
LCD1602ExtraPins
+5V
E
R/W
RS
VDD
VO
A/VEE
K
DB0
DB1
DB2
DB3
DB4
DB5
DB6
DB7
VSS
GND
J2
Audio-Jack-3_2Switches
J16
SPEAKER
R22
47R
L4
100 uH
SPKR
C1
10 nF
KeyerJack
J13
L1
L2
100 uH
470R
R1
R2
R4
10k
PTT
MIC
C2
C3
1 nF
C13
100 nF
C7
R5
4k7
22 uF
C5
C6
J15
L3
C4
R9
R10
100k
JP3
LINE
R11
R14
C8
U2A
LM358
R16
R17
1k
R15
C9
100 pF
U2B
R18
R19
JP4
C12
R20
R21
J10
Conn_01x20
Jumper_NC_Dual
JP1
JP2
J14
R7
R8
J1
Conn_01x04
U5
HD44780 DISPLAY
AND PUSHBUTTONS
R6
R12
R33
R13
R24
SW2
SW3
SW5
SW4
SW1
SW_Push
R29
R47
R3
R46
R23
C10
C16
C11
C17
C14
J4
J8
J20
J5
J9
J21
J3
J6
J11
J7
J12
Conn_01x01
BITBANGDISPLAY
DRAFT V5 BY KW4TI
Sheet: /
File: BitBangDisplay.sch
Title:
Size: A4
Date:
Rev:
KiCad E.D.A. kicad 4.0.7
Id: 1/1