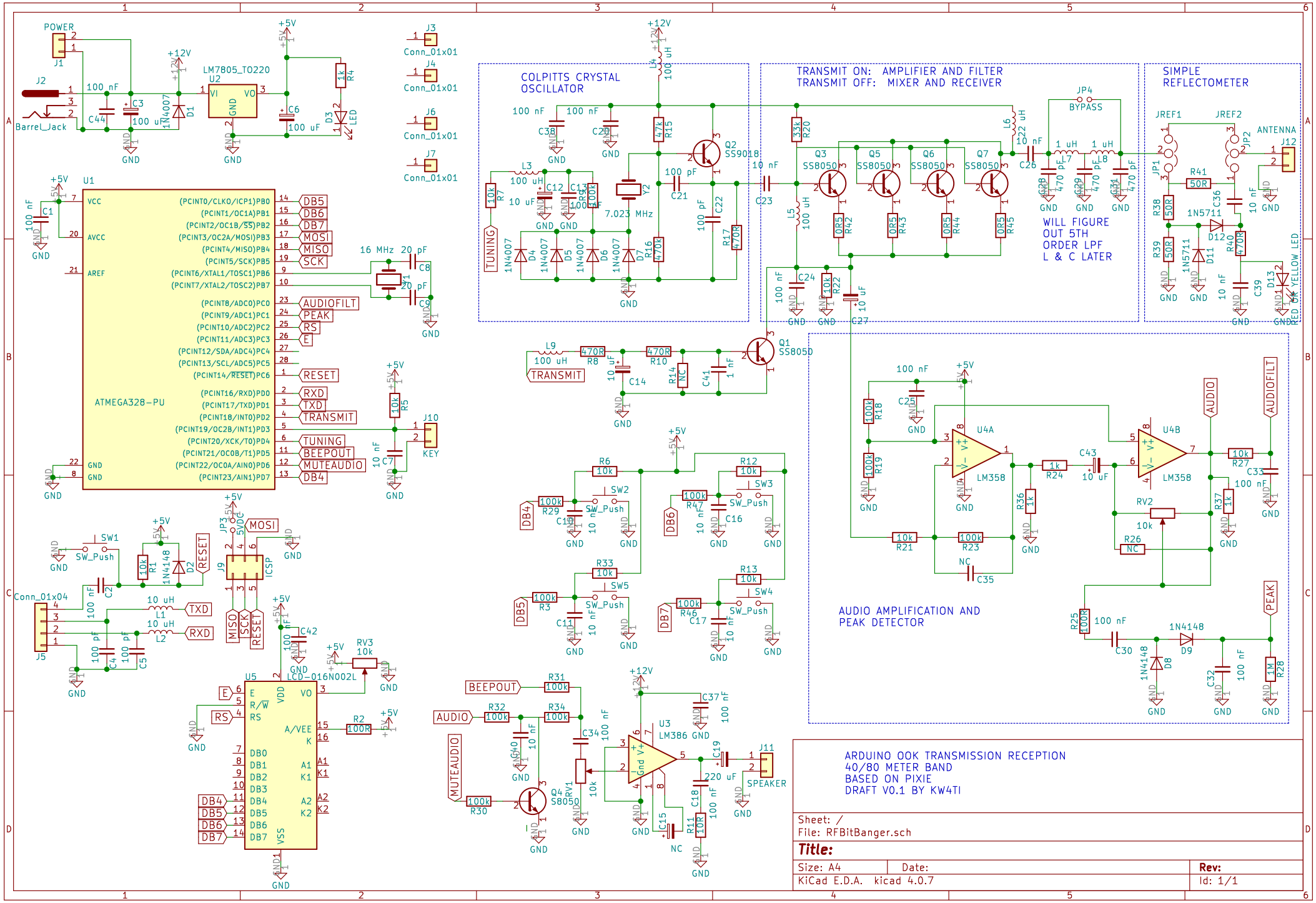
POWER
J1
J2
Barrel_Jack
100 nF
C44
C3
100 uF
1N4007
D1
+12V
LM7805_TO220
U2
VI
VO
GND
+5V
C6
100 uF
R4
1k
D3
LED
J3
Conn_01x01
J4
Conn_01x01
J6
Conn_01x01
J7
Conn_01x01
U1
ATMEGA328-PU
VCC
AVCC
AREF
GND
(PCINT0/CLKO/ICP1)PB0
(PCINT1/OC1A)PB1
(PCINT2/OC1B/SS)PB2
(PCINT3/OC2A/MOSI)PB3
(PCINT4/MISO)PB4
(PCINT5/SCK)PB5
(PCINT6/XTAL1/TOSC1)PB6
(PCINT7/XTAL2/TOSC2)PB7
(PCINT8/ADC0)PC0
(PCINT9/ADC1)PC1
(PCINT10/ADC2)PC2
(PCINT11/ADC3)PC3
(PCINT12/SDA/ADC4)PC4
(PCINT13/SCL/ADC5)PC5
(PCINT14/RESET)PC6
(PCINT16/RXD)PD0
(PCINT17/TXD)PD1
(PCINT18/INT0)PD2
(PCINT19/OC2B/INT1)PD3
(PCINT20/XCK/T0)PD4
(PCINT21/OC0B/T1)PD5
(PCINT22/OC0A/AIN0)PD6
(PCINT23/AIN1)PD7
DB5
DB6
DB7
MOSI
MISO
SCK
AUDIOFILT
PEAK
RS
E
RESET
RXD
TXD
TRANSMIT
TUNING
BEEPOUT
MUTEAUDIO
DB4
16 MHz
20 pF
C8
C9
C1
100 nF
R5
10k
J10
KEY
C7
10 nF
SW1
SW_Push
R1
10k
1N4148
D2
RESET
Conn_01x04
J5
C2
100 nF
L1
10 uH
L2
10 uH
C4
100 pF
C5
100 pF
JP3
5VDC
J9
ICSP
MISO
SCK
RESET
C42
100 nF
U5
LCD-016N002L
E
R/W
RS
VDD
VO
A/VEE
K
DB0
DB1
DB2
DB3
DB4
DB5
DB6
DB7
VSS
A1
K1
A2
K2
RV3
10k
R2
100k
COLPITTS CRYSTAL OSCILLATOR
100 nF
C3
C2
L3
100 uH
C12
C13
10 uF
R9
100k
R7
10k
TUNING
1N4007
D4
D5
D6
D7
R16
470k
Y2
7.023 MHz
C21
100 pF
C22
100 pF
R17
470R
R15
47k
Q2
SS9018
L4
100 uH
TRANSMIT ON: AMPLIFIER AND FILTER
TRANSMIT OFF: MIXER AND RECEIVER
33k
R20
C23
10 nF
L5
100 uH
Q3
Q5
Q6
Q7
SS8050
0R5
R42
R43
R44
R45
L6
22 uH
C26
10 nF
JP4
BYPASS
1 uH
L7
L8
470 pF
C28
C29
C31
WILL FIGURE
OUT 5TH
ORDER LPF
L & C LATER
C24
100 nF
R22
10k
C27
10 uF
SIMPLE
REFLECTOMETER
JREF1
JREF2
JP1
JP2
ANTENNA
J12
R41
50R
R38
50R
R39
50R
C36
10 nF
1N5711
D12
D11
R40
470R
C39
10 nF
D13
LED OK YELLOW LED
L9
100 uH
470R
R8
R10
10 uF
C14
R14
NC
C41
1 nF
Q1
SS8050
R6
10k
R12
10k
R33
10k
R13
10k
R29
100k
R47
100k
R3
100k
R46
100k
C15
10 nF
C16
10 nF
C11
10 nF
C17
10 nF
SW2
SW3
SW5
SW4
DB4
DB6
DB5
DB7
BEEPOUT
R31
100k
AUDIO
R32
100k
R34
100k
C40
10 nF
C34
100 nF
MUTEAUDIO
R30
100k
Q4
S8050
RV1
10k
U3
LM386
C37
100 nF
C19
220 uF
J11
SPEAKER
C18
100 nF
R11
10R
C15
NC
U4A
U4B
LM358
100k
R18
100k
R19
R21
10k
R23
100k
R36
1k
R24
1k
C43
10 uF
RV2
10k
R26
NC
C35
NC
R27
10k
C33
100 nF
R37
1k
AUDIO
AUDIOFILT
PEAK
AUDIO AMPLIFICATION AND
PEAK DETECTOR
R25
100R
C30
100 nF
1N4148
D9
D8
C32
100 nF
R28
1M
ARDUINO OOK TRANSMISSION RECEPTION
40/80 METER BAND
BASED ON PIXIE
DRAFT V0.1 BY KW4TI
Sheet: /
File: RFBitBanger.sch
Title:
Size: A4
Date:
Rev:
KiCad E.D.A. kicad 4.0.7
Id: 1/1