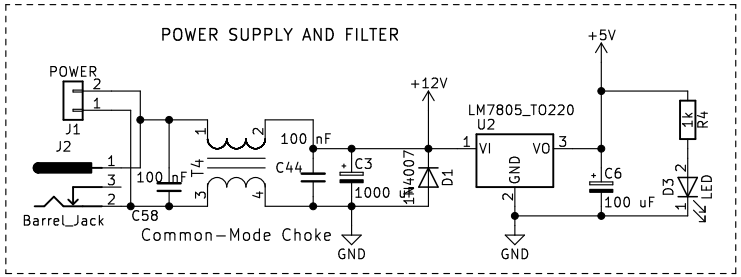

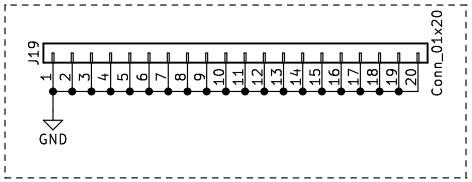

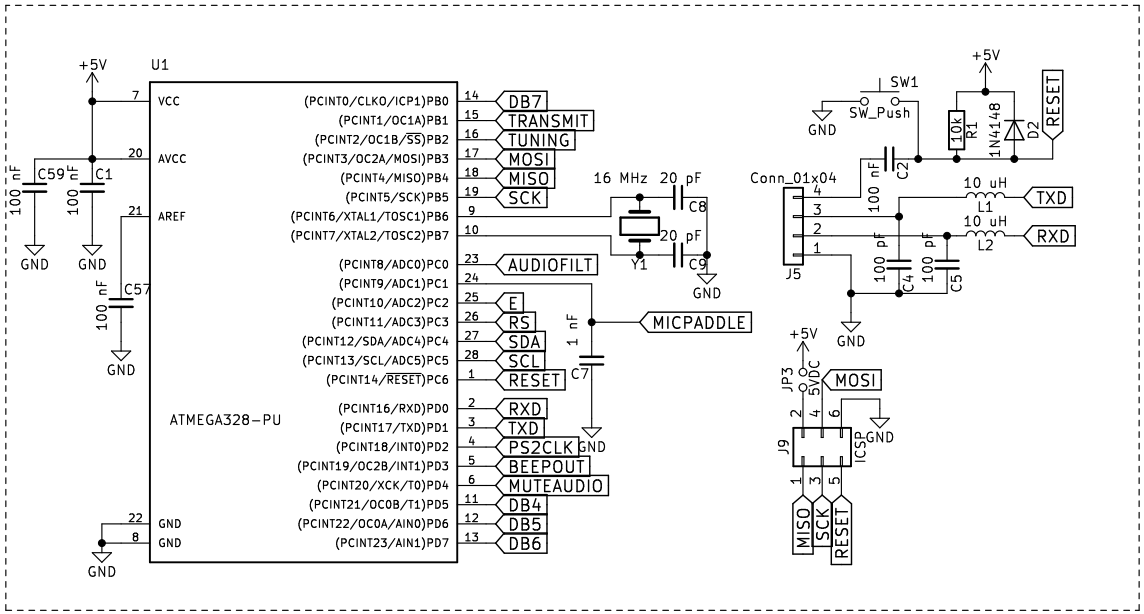

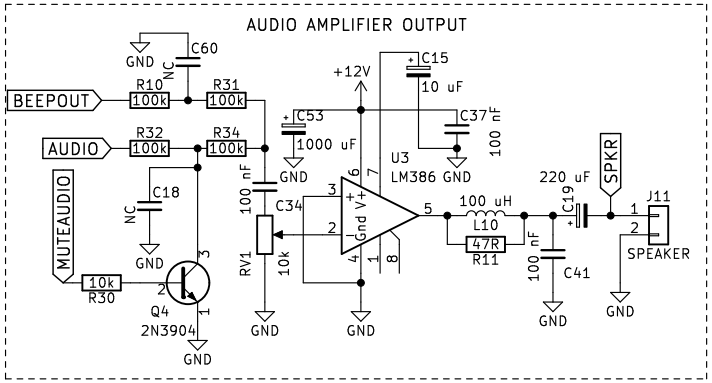

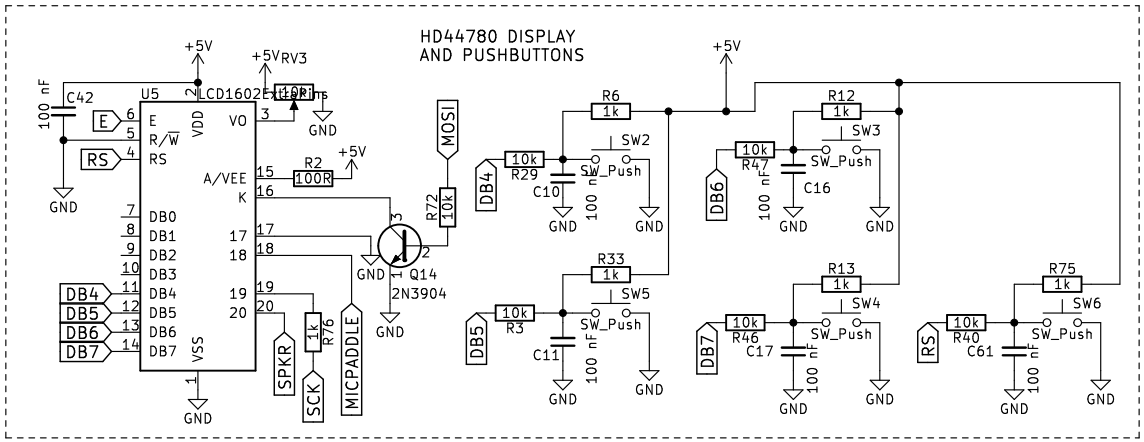

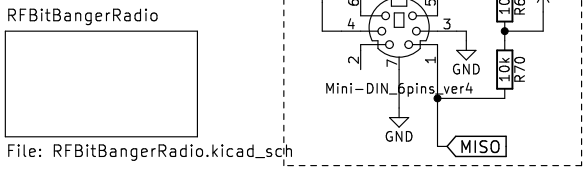

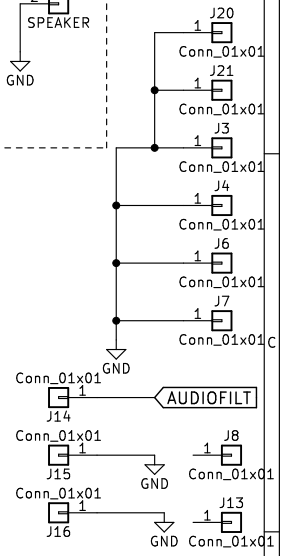

RFBitBangerRadio

File: RFBitBangerRadio.kicad_sch

RFBITBANGER
20m to 80m BAND
DRAFT V5 BY KW4TI

Sheet: /
File: RFBitBanger.kicad_sch

Title:

Size: A4	Date:	**Rev:**
KiCad E.D.A. kicad (6.0.11)		Id: 1/2

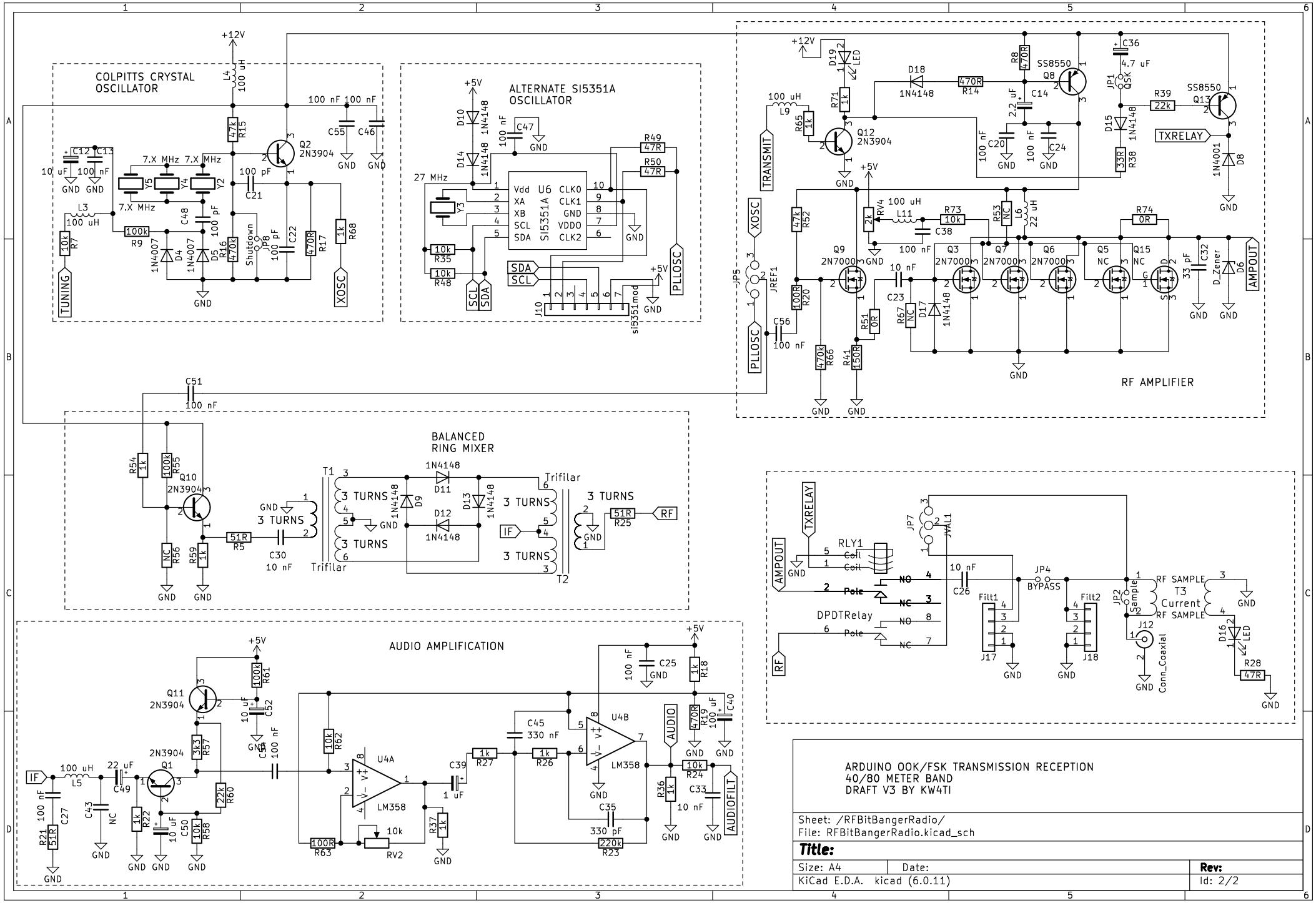
COLPITTS CRYSTAL OSCILLATOR
ALTERNATE SI5351A OSCILLATOR
RF AMPLIFIER
BALANCED RING MIXER
AUDIO AMPLIFICATION
ARDUINO OOK/FSK TRANSMISSION RECEPTION
40/80 METER BAND
DRAFT V3 BY KW4TI
Sheet: /RFBitBangerRadio/
File: RFBitBangerRadio.kicad_sch
Title:
Size: A4
Date:
Rev:
KiCad E.D.A. kicad (6.0.11)
Id: 2/2