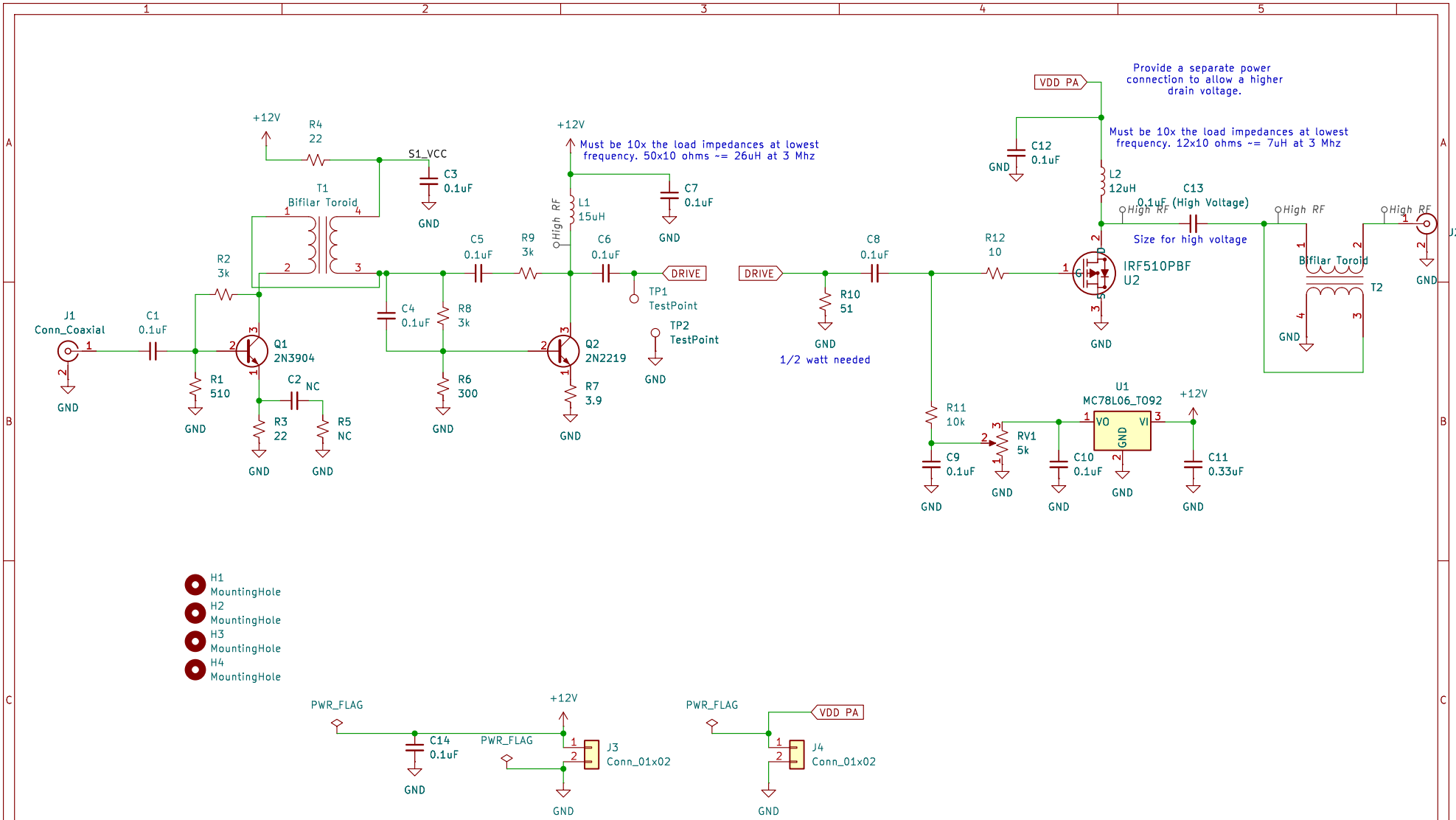

NOT FOR COMMERCIAL USE
Copyright (C) Bruce MacKinnon, 2025

Bruce MacKinnon KC1FSZ

Sheet: /
File: qrp1.kicad_sch

Title: 5W PA + Driver

Size: USLetter	Date: 2025-02-19	**Rev: 1**
KiCad E.D.A. 8.0.6		Id: 1/1