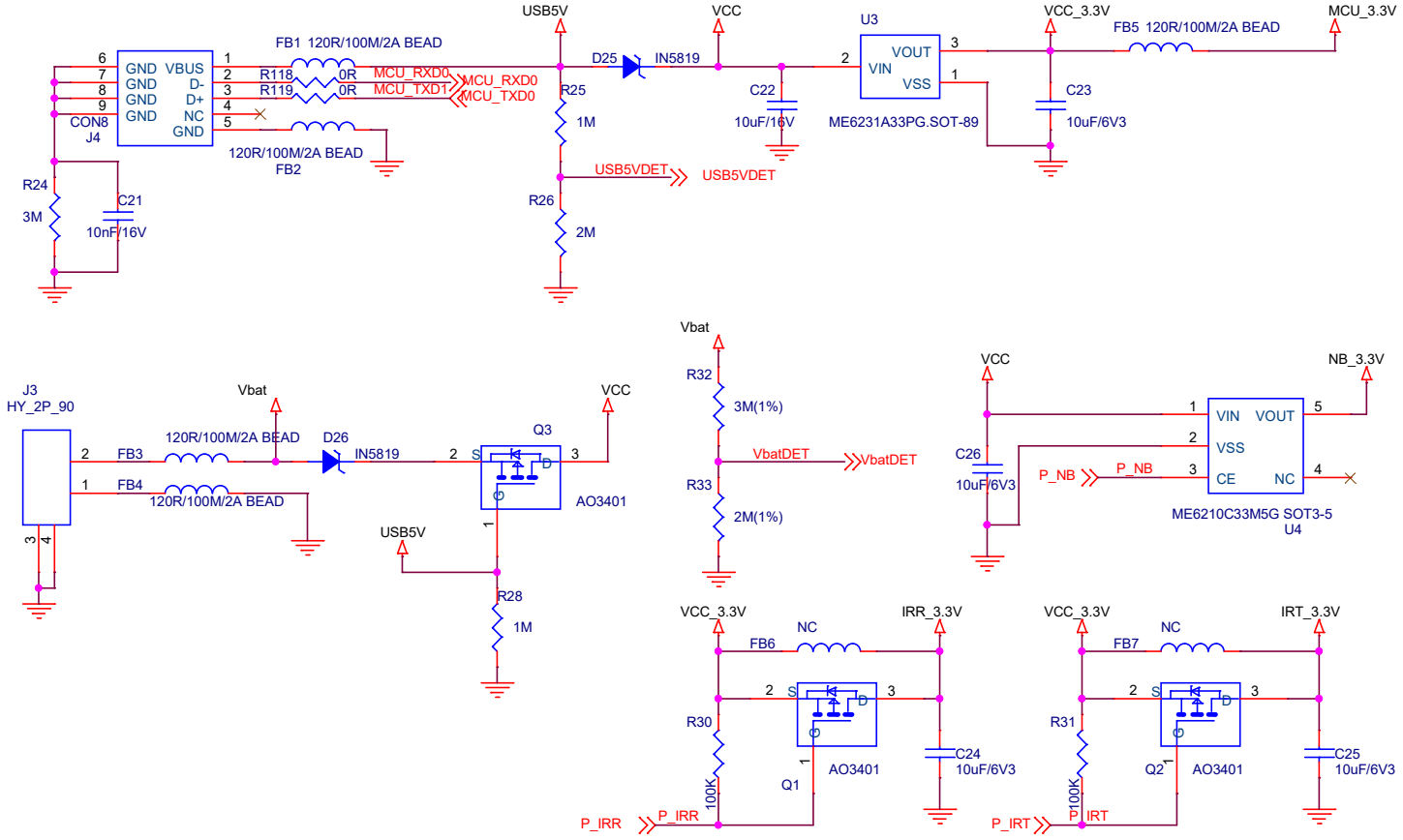

Title	<Title> RX_HSX_MAIN		
Size A	Document Number <Doc> 03 POWER		Rev 2.0
Date: Saturday, April 23, 2022		Sheet 1 of 1	