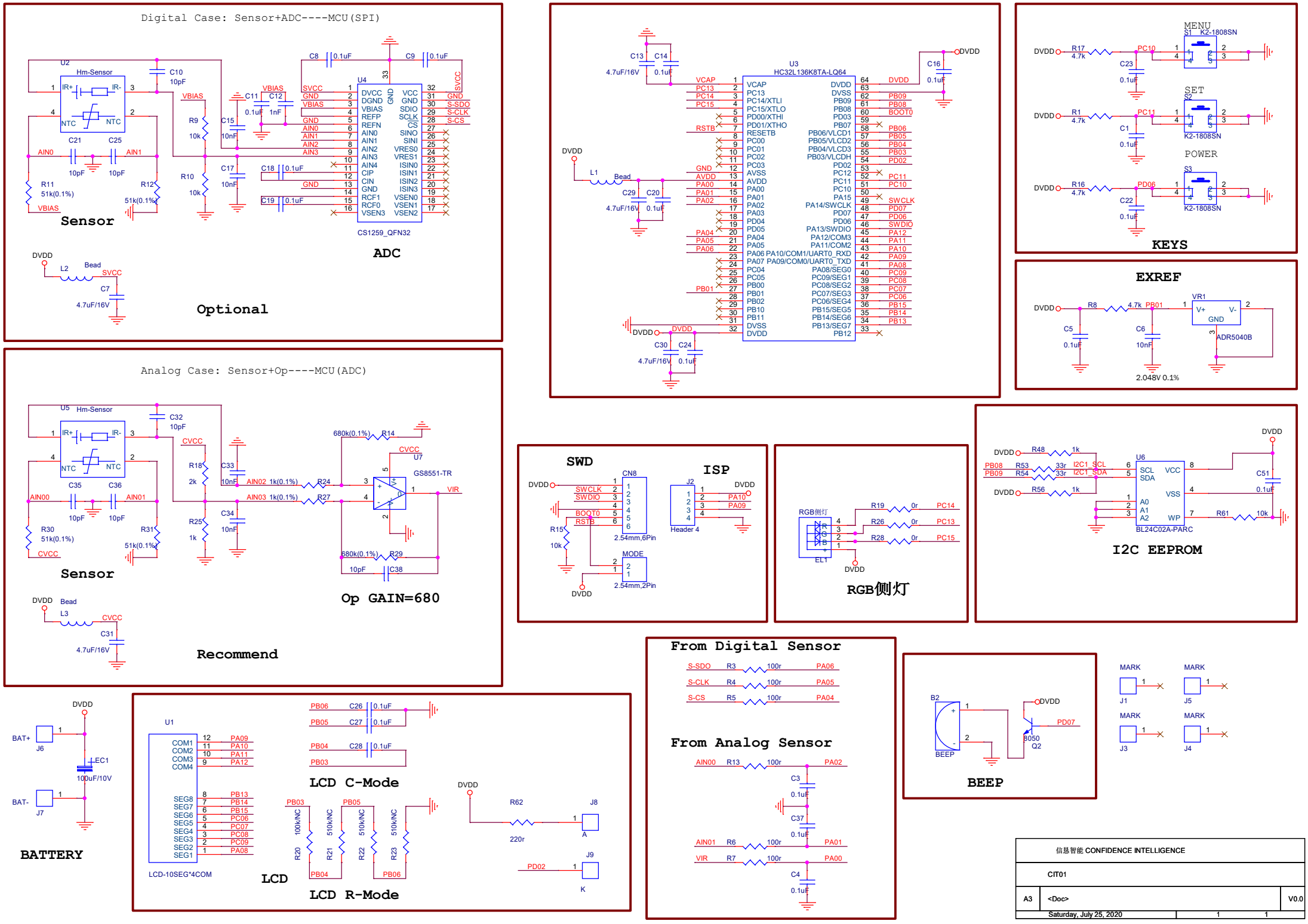
Digital Case: Sensor+ADC----MCU(SPI)
Sensor
ADC
CS1259_QFN32
Optional
Analog Case: Sensor+Op----MCU(ADC)
Sensor
Op GAIN=680
Recommend
U3
HC32L136K8TA-LQ64
KEYS
MENU
SET
POWER
K2-1808SN
EXREF
ADR5040B
SWD
ISP
Header 4
RGB侧灯
I2C EEPROM
BL24C02A-PARC
From Digital Sensor
From Analog Sensor
BEEP
BATTERY
LCD-10SEG*4COM
LCD
LCD C-Mode
LCD R-Mode
信息智能 CONFIDENCE INTELLIGENCE
CIT01
A3
V0.0
Saturday, July 25, 2020