Mains & Power Schematic

File: PowerSchematic.kicad_sch

IO

File: IO.kicad_sch

E-Stop, Drive Error, External Error

File: EStop.kicad_sch

UI_Panel

File: UI_Panel.kicad_sch

ESP32_DevKitC10

File: ESP32_DevKitC10.kicad_sch

CNC76010

File: CNC76010.kicad_sch

to do:

CNCconversion@yahoo.com
Only personal use – no commercial use
Do not distribute without approval
CNC conversion Netherlands

Sheet: /
File: ElectricalSchematic.kicad_sch

Title: CNC refit Imes GFY98

Size: A3	Date: 2025-05-10	Rev: 1.0
KiCad E.D.A. 9.0.1		Id: 1/7

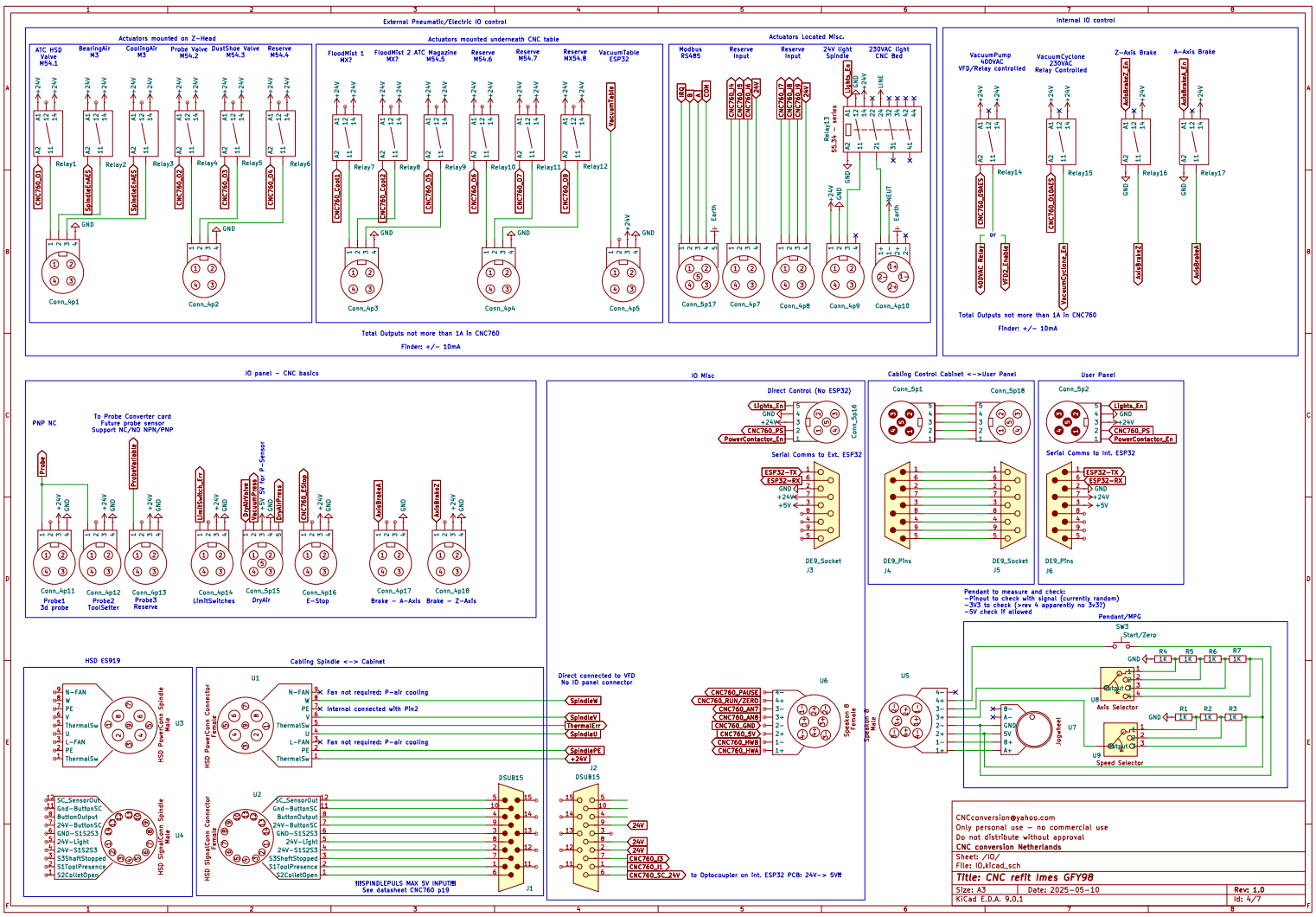
External Pneumatic/Electric IO control
Actuators mounted on Z-Head
Actuators mounted underneath CNC table
Actuators Located Misc.
Internal IO control
Total Outputs not more than 1A in CNC760
Finder: +/- 10mA
IO panel - CNC basics
IO Misc
Cabling Control Cabinet <->User Panel
User Panel
Pendant to measure and check:
-Pinout to check with signal (currently random)
-3V3 to check (>rev 4 apparently no 3v3?)
-5V check if allowed
Pendant/MPG
HSD ES919
Cabling Spindle <-> Cabinet
Direct connected to VFD
No IO panel connector
!!!SPINDLEPULS MAX 5V INPUT!!!
See datasheet CNC760 p19
to Optocoupler on Int. ESP32 PCB: 24V-> 5V!!
CNCconversion@yahoo.com
Only personal use - no commercial use
Do not distribute without approval
CNC conversion Netherlands
Sheet: /IO/
File: IO.kicad_sch
Title: CNC refit Imes GFY98
Size: A3
Date: 2025-05-10
Rev: 1.0
KiCad E.D.A. 9.0.1
Id: 4/7

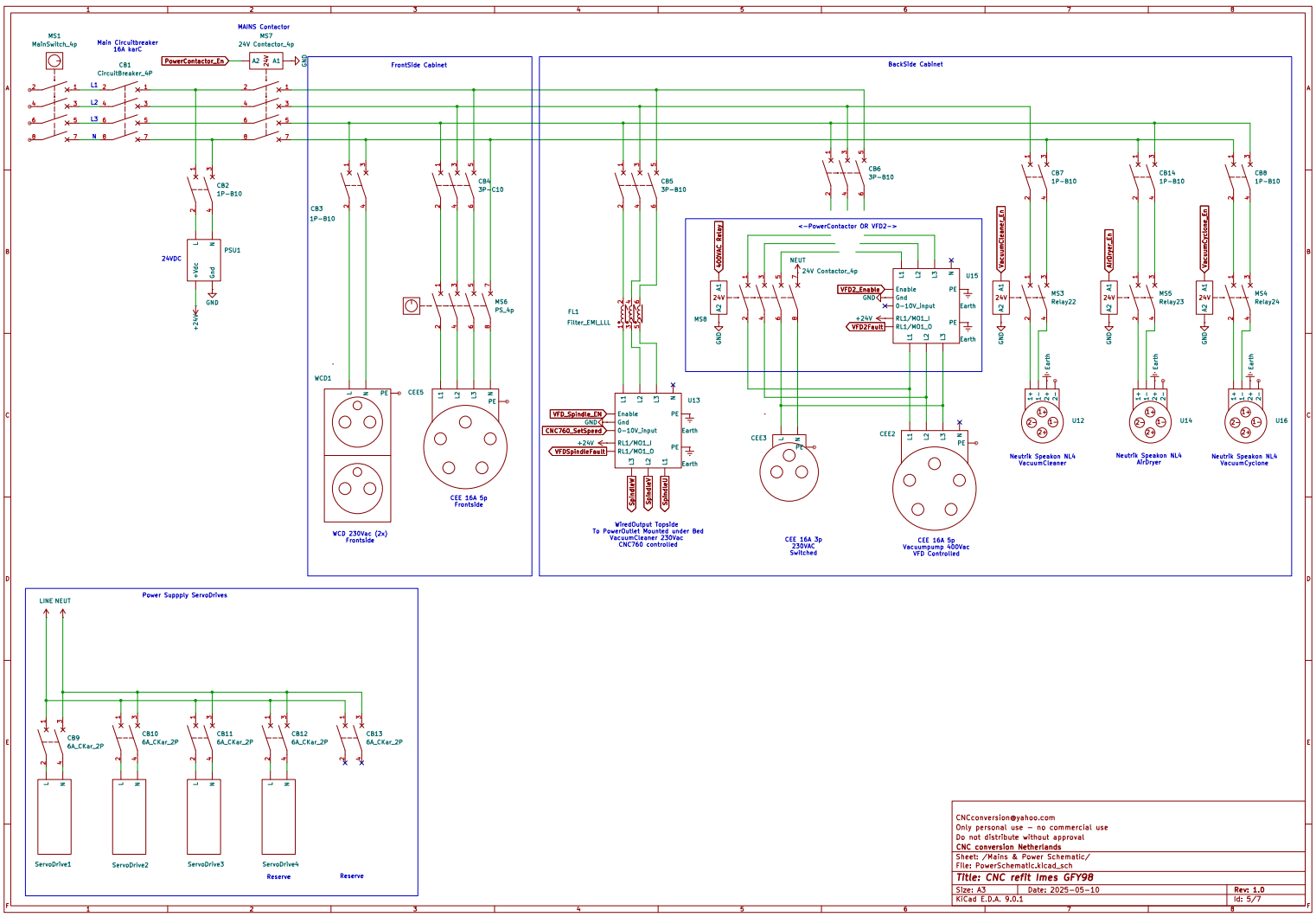

CNCconversion@yahoo.com
Only personal use – no commercial use
Do not distribute without approval
CNC conversion Netherlands

Sheet: /Mains & Power Schematic/
File: PowerSchematic.kicad_sch

Title: CNC refit Imes GFY98

Size: A3	Date: 2025-05-10	Rev: 1.0
KiCad E.D.A. 9.0.1		Id: 5/7

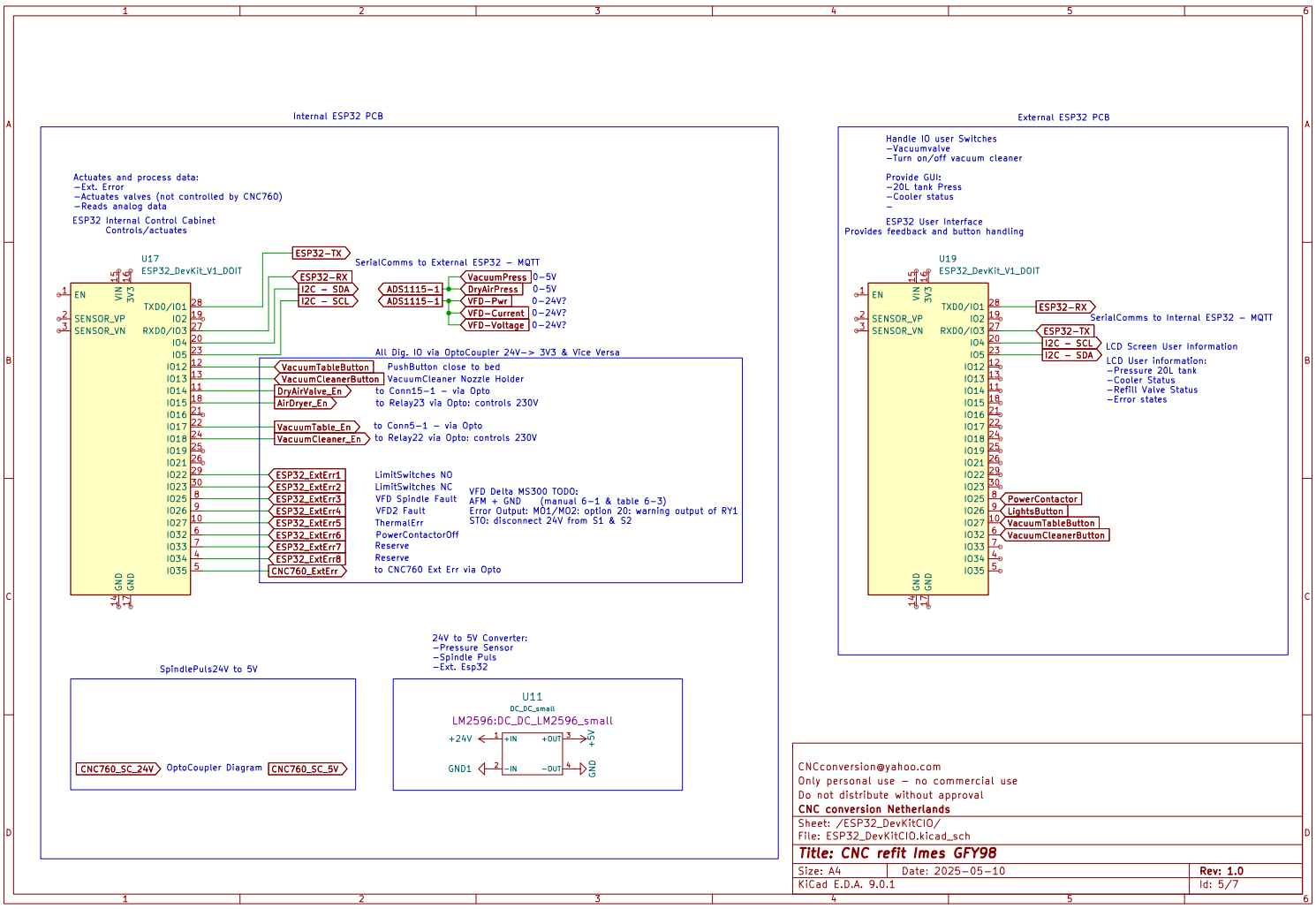

CNCconversion@yahoo.com
Only personal use – no commercial use
Do not distribute without approval

CNC conversion Netherlands

Sheet: /ESP32_DevKitCIO/
File: ESP32_DevKitCIO.kicad_sch

Title: CNC refit Imes GFY98

Size: A4	Date: 2025–05–10	**Rev: 1.0**
KiCad E.D.A. 9.0.1		Id: 5/7

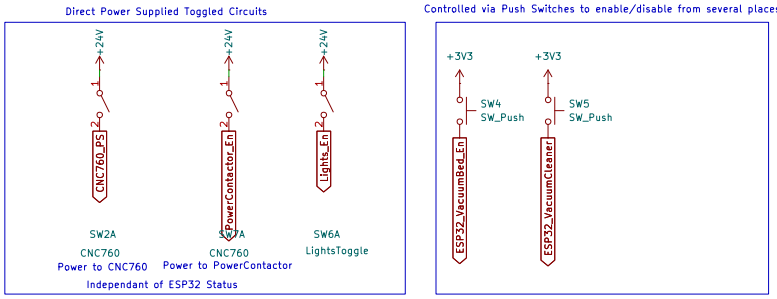

CNCconversion@yahoo.com
Only personal use – no commercial use
Do not distribute without approval
CNC conversion Netherlands

Sheet: /UI_Panel/
File: UI_Panel.kicad_sch

Title: CNC refit Imes GFY98

Size: A4	Date: 2025-05-10	**Rev: 1.0**
KiCad E.D.A. 9.0.1		Id: 6/7

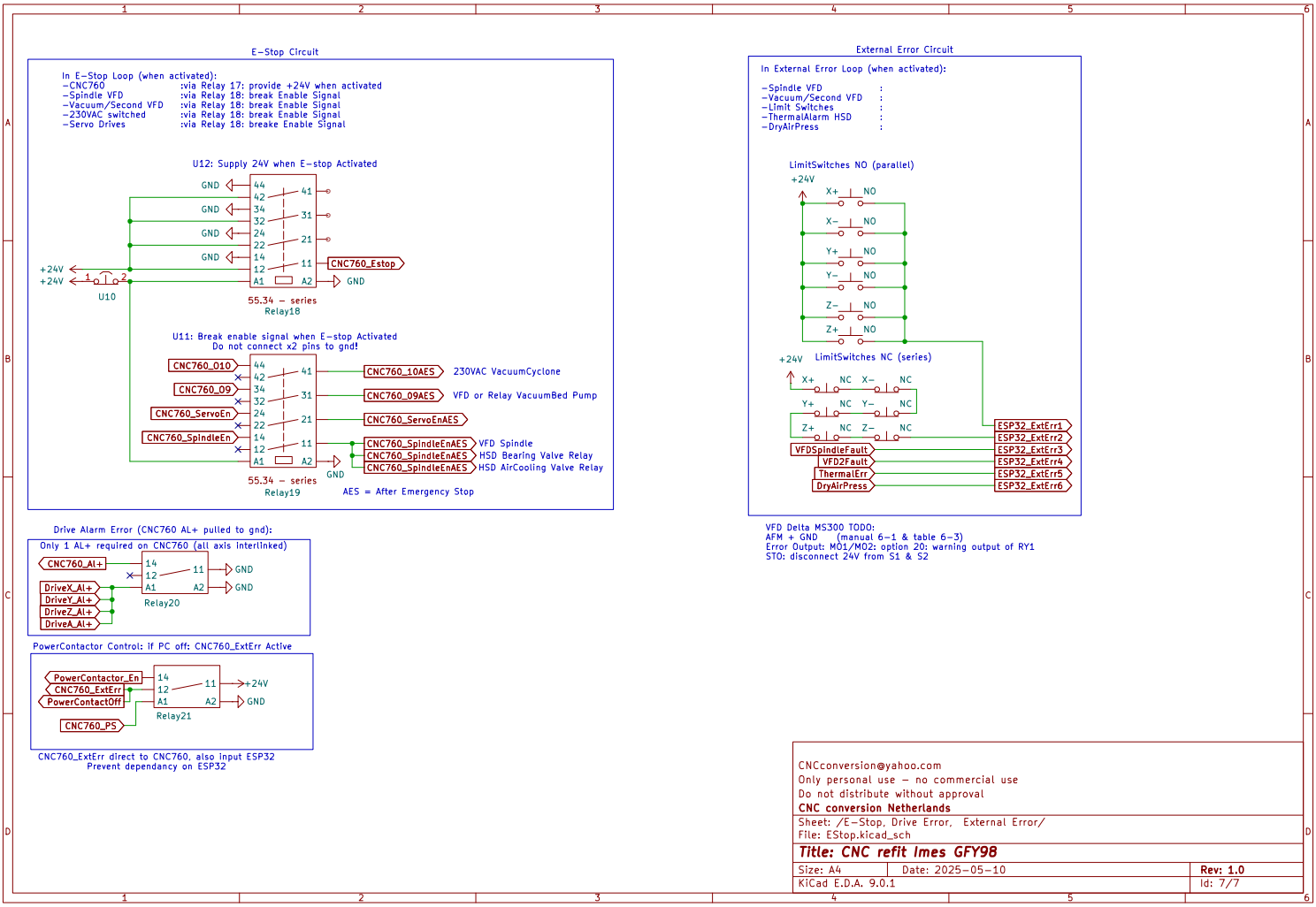

CNCconversion@yahoo.com
Only personal use – no commercial use
Do not distribute without approval

CNC conversion Netherlands

Sheet: /E-Stop, Drive Error, External Error/		
File: EStop.kicad_sch		
Title: CNC refit Imes GFY98		
Size: A4	Date: 2025-05-10	**Rev: 1.0**
KiCad E.D.A. 9.0.1		Id: 7/7

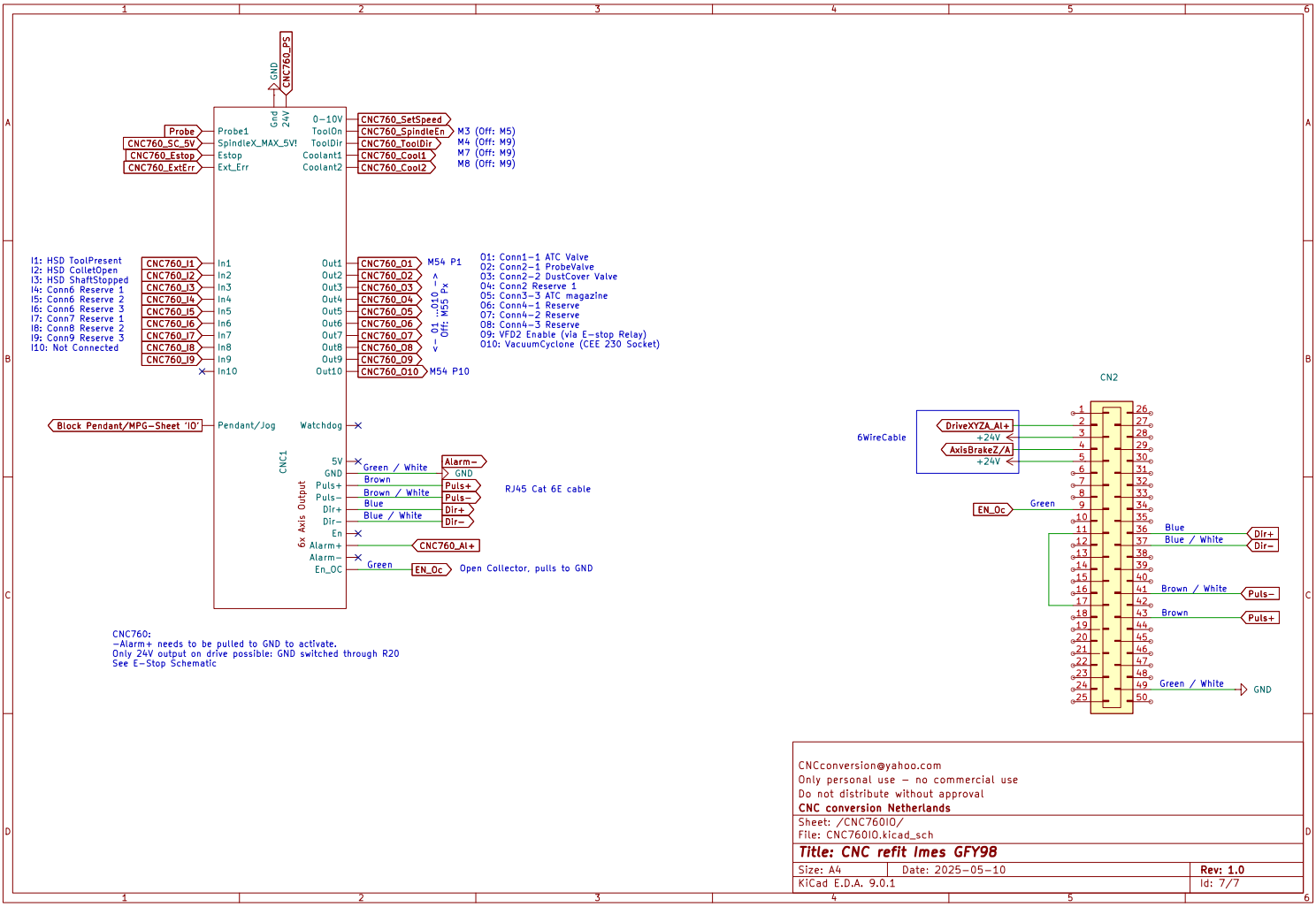

CNCconversion@yahoo.com
Only personal use – no commercial use
Do not distribute without approval
CNC conversion Netherlands

Sheet: /CNC760IO/
File: CNC760IO.kicad_sch

Title: CNC refit Imes GFY98

Size: A4	Date: 2025–05–10	**Rev: 1.0**
KiCad E.D.A. 9.0.1		Id: 7/7