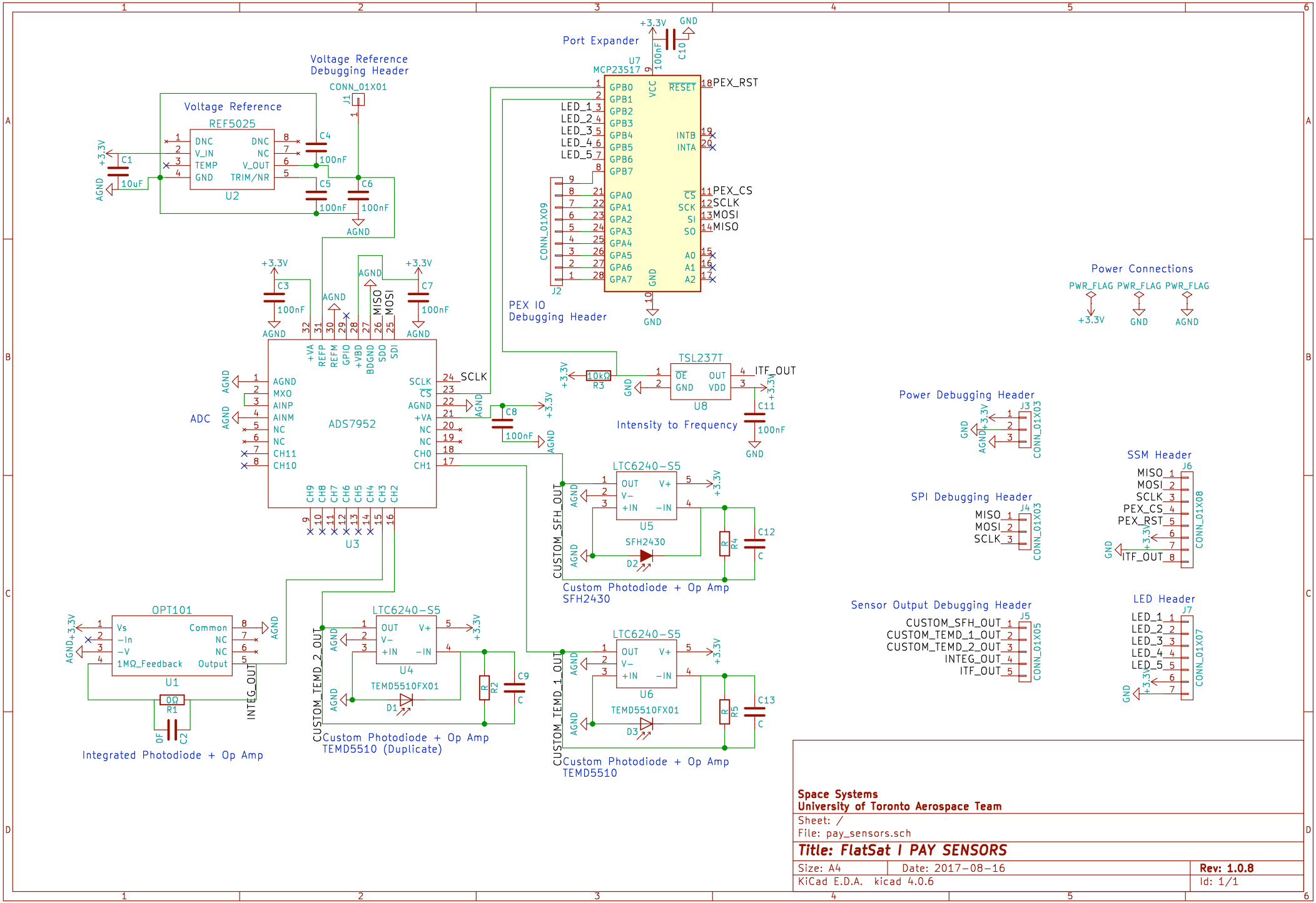

Space Systems
University of Toronto Aerospace Team

Sheet: /
File: pay_sensors.sch

Title: FlatSat I PAY SENSORS

Size: A4	Date: 2017-08-16	**Rev: 1.0.8**
KiCad E.D.A. kicad 4.0.6		Id: 1/1