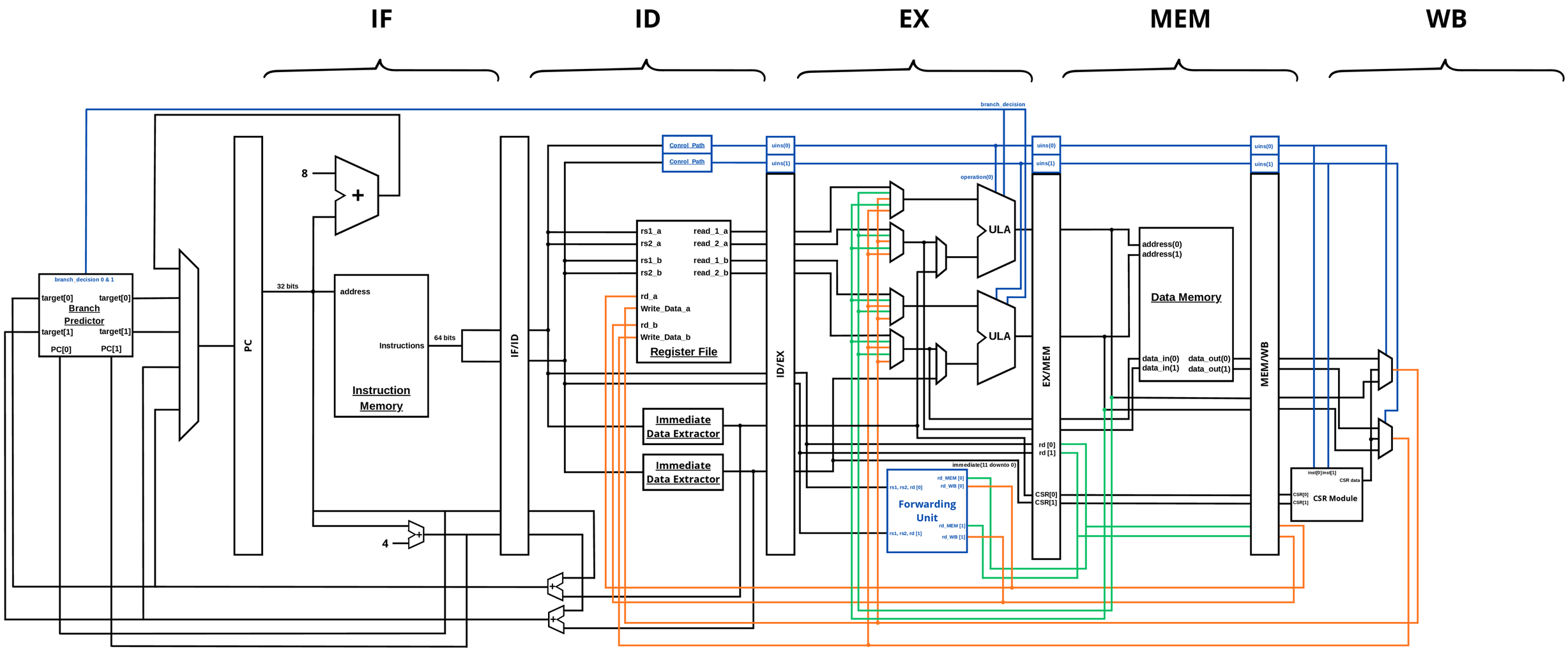
IF
ID
EX
MEM
WB
branch_decision
branch_decision 0 & 1
target[0]
target[0]
Branch Predictor
target[1]
target[1]
PC[0]
PC[1]
PC
32 bits
8
+
address
Instructions
Instruction Memory
64 bits
4
IF/ID
Conrol_Path
Conrol_Path
rs1_a
rs2_a
rs1_b
rs2_b
rd_a
Write_Data_a
rd_b
Write_Data_b
read_1_a
read_2_a
read_1_b
read_2_b
Register File
Immediate Data Extractor
Immediate Data Extractor
uins(0)
uins(1)
ID/EX
operation(0)
ULA
ULA
immediate(11 downto 0)
rs1, rs2, rd [0]
rd_MEM [0]
rd_WB [0]
Forwarding Unit
rd_MEM [1]
rs1, rs2, rd [1]
rd_WB [1]
uins(0)
uins(1)
EX/MEM
rd [0]
rd [1]
CSR[0]
CSR[1]
address(0)
address(1)
Data Memory
data_in(0)
data_in(1)
data_out(0)
data_out(1)
uins(0)
uins(1)
MEM/WB
inst[0] inst[1]
CSR data
CSR[0]
CSR[1]
CSR Module